Total No. of Questions : 8]

SEAT No. :

P588

[Total No. of Pages : 3

[5869] - 201
S.E. (Civil Engineering)
BUILDING TECHNOLOGY AND ARCHITECTURAL PLANNING
(2019 Pattern) (Semester - III)

Time : 2½ Hours] *[Max. Marks : 70*

Instructions to the candidates:

1) ***Attempt Q1, or Q.2, Q3 or Q4, Q5or Q6, Q7 or Q8.***
2) ***Figures to the right indicate full marks.***
3) ***Draw neat figures wherever necessary.***
4) ***Assume necessary data.***
5) ***Use of scientific Calculator is allowed.***

Q1) a) Draw a neat labeled sketch of semicircular - arch and show: **[6]**

i) Rise

ii) Intrados

iii) Extrados

b) Enlist any six types of doors and explain paneled door with neat sketch. **[6]**

c) State functional requirement of good flooring material. **[6]**

OR

Q2) a) Draw the neat sketch of arch and explain any four components. **[6]**

b) Enlist any four types of floor finishes and explain mosaic flooring. **[6]**

c) What are the functions of arches and lintels? Give relative merits of lintels over arches. **[6]**

Q3) a) Explain building meterial used for green building. **[6]**

b) Explain steps for design of dog legged staircase. **[6]**

c) Write a short note on green building certification in India. **[5]**

OR

P.T.O.

Q4) a) What are the fundamental requirements of residential building? **[6]**

b) What do you understand by Leadership in Energy and Environmental Design (LEED)? **[6]**

c) Give the classification of residential building explain any two type in brief. **[5]**

Q5) a) Design primary school for 6 class room the building is single story and RCC frame the structure following details. **[12]**

i) primary classroom : 50 sq.m
ii) museum : 16 sq.m
iii) art room : 68 sq.m
iv) craft room : 68 sq.m
v) headmaster room : 15 sq.m
vi) administrative room : 30 sq.m
vii) common staff room : 60 sq.m
viii) medical unit : 15 sq.m
ix) book store : 15 sq.m

Draw to the scale 1 to 50 or suitable.

Line plan showing location of the door and window.

b) What are the salient features of engineering student's hostel building?**[6]**

OR

Q6) a) It is propose to construct a public health center with following details. **[12]**

i) Lounge: 30 sq.m
ii) Reception: 20 sq.m
iii) Administrative office : 20 sq.m
iv) doctor cabin : 15 sq.m
v) nurse room : 15 sq.m
vi) labour room : 15 sq.m
vii) Ward room 2 number : 20 sq.m each
viii) store room : 15 sq.m

Draw the line plan showing location of the door send Windows schedule of the opening

b) What are the salient features of vegetable market building? **[6]**

Q7) a) State different objective of D.P and parameter of quality of urban life. **[6]**

b) What is fire escape and explain any one fire escape elements? **[6]**

c) Explain with sketches, wind and stack effect. **[5]**

OR

Q8) a) Explain the necessity of providing fire protection system in building. **[6]**

b) What is the necessity of ventilation and explain types of ventilation? **[6]**

c) Explain with a neat diagram winter air conditioning. **[5]**

Total No. of Questions : 8]

SEAT No. :

P589

[Total No. of Pages : 3

[5869]-202
S.E. (Civil Engineering)
MECHANICS OF STRUCTURES
(2019 Pattern) (Semester - III)

Time : 2½ Hours] *[Max. Marks : 70*

Instructions to the candidates:

1) ***Answer Q.1 or Q.2, Q.3 or Q.4, Q.5 or Q.6, Q.7 or Q.8.***
2) ***Assume suitable data, if necessary.***
3) ***Use of Non-Programmable calculator is allowed.***

Q1) a) A symmetric I section having two flanges each of 200 mm × 25mm and vertical web of 20mm ×200mm is subjected to shear force of 150 kN. Draw Shear Force Distribution diagram. **[9]**

b) A rectangular beam of section 300 mm wide and 600 mm deep is simply supported and carrying uniformly distributed load of 50 kN/m on entire span of 4m. Find maximum bending stress and draw Bending stress distribution diagram. **[9]**

OR

Q2) a) A beam of 'T' section having flange 1000 mm ×100 mm and web 100mm ×800 mm is subjected to a Shear force of 200kN. Draw Shear stress distribution diagram. **[9]**

b) A beam of symmetric I section has following dimensions: **[9]**

Flanges - 500 mm ×50mm

Web - 30 mm ×200mm

The beam is 5m long and carrying a central point load of 180 kN. The beam is simply supported. Determine max tensile bending stress induced in the beam.

P.T.O.

Q3) a) A hollow circular shaft has external and internal diameter as 100 mm and 60 mm respectively. The shaft rotates at 120 rpm. The twist observed is 2° in 6m length. Determine the power can be transmitted. Use G = 78 GPa. **[9]**

b) A circular bar 50 mm diameter carries an axial tensile load of 200kN. Determine the value of shear stress on the plane on which normal stress has value of 100 MPa tensile. **[8]**

OR

Q4) a) A steel shaft 4m long transmits a torque of 30 kN/m. Angle of twist in this length is limited to 2.5° and allowable shear stress is 85 MPa. Determine safe diameter of the shaft is G = 80 GPa. **[9]**

b) The principal tensile stresses at a point on two perpendicular planes are 120 MPa and 50 MPa. Determine normal, tangential and resultant stress on a plane at 30° with major principal plane. **[8]**

Q5) a) A Column both ends fixed, carries a safe load of 600 kN with factor of safety 4. If column is 5m long having external diameter of 250mm. Determine internal diameter of the cast iron column. Use Euler equation. Take $E = 2\times10^5$ N/mm^2. **[9]**

b) A rectangular column of 250 mm × 150 mm is carrying a compressive load of 150 kN at an eccentricity of 50 mm in a plane bisecting 150 mm side. Determine maximum and minimum stresses across the cross section. **[9]**

OR

Q6) a) Give the effective length of column for various end conditions. **[4]**

b) A steel rod 5m long and 40mm diameter is used as a column. One end fixed and other is free. Determine the crippling load by Euler's formula. Take E = 200 GPa. **[7]**

c) A square column 300mm × 300mm carries an axial load of 200 kN. Find the position of 30 kN load acting along the axis bisecting the width of c/s so that stress developed at the other extreme of column will be zero. **[7]**

Q7) a) A simply supported beam 'AB' of span 8m is subjected to point loads of 80kN and 100kN at 3m and 5m from left support A respectively. Determine slope at A support 'A' and deflection under loads.
EI = 2.67×10^9 kNm^2 **[9]**

b) Determine slope and deflection at the free end of cantilever beam of span 'l' m subjected to a point load 'W' kN at the centre of the beam. Use castigliano's first theorem. **[8]**

OR

Q8) a) Derive expression for slope at supports and maximum deflection, for a simply supported beam of span 'L' m carrying udl on entire span of intensity w kN/m, using Macaulay's method. **[9]**

b) Find the vertical and horizontal deflection of joint 'C' of the truss shown. The area of the inclined tie is 2500 mm^2 and the horizontal member is 1400 mm^2. Take E = 210 kN/mm^2. **8]**

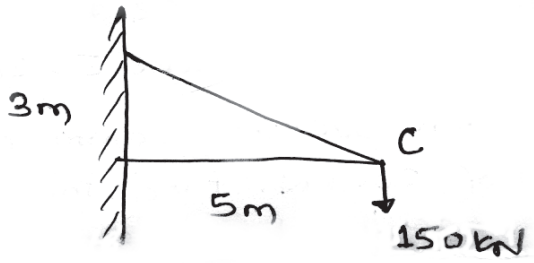

Total No. of Questions : 8]

SEAT No. :

P590

[Total No. of Pages : 3

[5869] - 203
S.E. (Civil)
FLUID MECHANICS
(2019 Pattern) (Semester - III)

Time : 2½ Hours] ***[Max. Marks : 70***

Instructions to the candidates :

1) ***Answer Q.1 or Q.2, Q.3 or Q.4, Q.5 or Q.6, Q.7 or Q.8.***
2) ***Answers to the all questions should be written in single answer-book.***
3) ***Neat diagrams must be drawn wherever necessary.***
4) ***Figures to the right indicate full marks.***
5) ***Use of logarithmic tables, slide rule, Mollier charts, electronic pocket calculator (non programmable) and steam tables is allowed.***
6) ***Assume suitable data, if necessary.***

Q1) a) Explain the procedure of dimensional analysis by Buckingham's Π method. **[9]**

b) Explain the phenomenon of Boundary Layer Separation and Methods to control to it. **[8]**

OR

Q2) a) The resisting force R of a supersonic plane during the flight can be considered as dependent upon the length of the aircraft *l*, velocity V, air viscosity μ, air density ρ and bulk modulus of air K. Express the functional relationship between these variables and the resisting force. Use Buckingham's Π method. **[9]**

b) Explain with the help of neat sketch

i) Laminar boundary layer

ii) Turbulent boundary layer

iii) Laminar sub-layer. **[8]**

P.T.O.

Q3) a) In case of flow of viscous fluid through circular pipe; show that the loss of pressure head is given by the following expression : **[8]**

$$\frac{p_1 - p_2}{\rho g} = \left[\frac{32\mu\bar{\mu}L}{\rho g D^2}\right]$$

b) Derive the following expression with usual notations for loss of head in pipes due to sudden enlargement. **[9]**

$$h_e = \frac{(V_1 - V_2)^2}{2g}$$

OR

Q4) a) Explain Prandtl's mixing length theory for turbulent shear stress. **[8]**

b) A pipe of diameter 21 cm and length 2050 connects two reservoirs, having difference of water levels as 20.5 m. Determine the discharge through the pipe. If an additional pipe of diameter 21 cm and length 1200 m is attached to the last 1200 m length of the existing pipe, find the increase in the discharge. Take f = 0.015 and neglect minor losses. **[9]**

Q5) a) Explain : **[10]**

i) Classification of Channel and

ii) Channel flows.

b) Derive the conditions for most economical trapezoidal channel section.**[8]**

OR

Q6) a) A trapezoidal channel has side slopes 1 to 1. It is required to discharge 13.80 m^3/s of water with a bed gradient of 1 in 1000. If unlined the value of Chezy's C is 44. If lined with concrete its value is 60. The cost per m^3 of excavation is four times the cost per m^2 of lining. The channel is to be the most efficient one. Find whether the lined canal or the unlined canal will be cheaper. What will be the dimensions of that economical canal?**[10]**

b) Explain : **[8]**

i) Velocity distribution in open channel flow and

ii) Geometric elements of channel

Q7) a) i) A kite 0.8 m × 0.8m weighing 3.95 N assumes an angle of 12° to the horizontal. The string attached to the kite makes an angle of 45° to the horizontal. The pull on the string is 24.55 N when the wind is flowing at speed of 31 km/hour. Find the corresponding co-efficient of drag and lift. Density of air is given as 1.25 kg/m^3. **[8]**

ii) Differentiate between streamlined body and bluff body. **[2]**

b) Find the slope of the free water surface in a rectangular channel of width 20m having depth of flow 6m. The discharge through the channel is 55 m^3/s. The bed of the channel having a slope of 1 in 4500. Assume the value of Chezy's constant C = 65. **[8]**

OR

Q8) a) A rectangular channel is 20 m wide and carries a discharge of 65 m^3/s. It is laid at a slope of 0.0001. At a certain section along the channel length, the depth of flow is 2m. How far U/S or D/S will the depth be 2.6m? Take n = 0.02. Use direct step method with three steps. Consider the depth increment in the interval of 0.1 m. Classify and sketch the profile.**[10]**

b) Explain with neat sketch : **[8]**

i) Angle of attack ii) Chord length

iii) Span and iv) Aspect ratio.

▽▽▽▽

Total No. of Questions : 9]

SEAT No. : ____

P591

[Total No. of Pages : 7

[5869]-204

S.E. (Civil)

ENGINEERING MATHEMATICS - III

(2019 Pattern) (Semester - III) (207001)

Time : 2½ Hours] ***[Max. Marks : 70***

Instructions to the candidates:

1) ***Question No. 1 is compulsory***
2) ***Attempt Q.No.2 or Q.No.3, Q.No.4 or Q.No.5, Q.No.6 or Q.No.7, Q.No.8 or Q.No.9.***
3) ***Assume suitable data if necessary.***
4) ***Neat diagrams must be drawn wherever necessary.***
5) ***Figures to the right side indicate full marks.***
6) ***Use of electronic pocket calculator is allowed.***

Q1) a) A random normal variable X has parameter $\mu = 50$ and $\sigma = 3$. The area A under the density curve of X from $x = 40$ to $x = 60$ is **[2]**

i) Equal

ii) Less

iii) More

then the area A' under the corresponding standard normal curve from $z = -3$ to $z = 3$.

b) Let $X = B\left(15, \frac{1}{4}\right)$. Then $V - \frac{3}{4}E$ equals **[1]**

i) $\frac{15}{4}$

ii) 0

iii) $\frac{45}{4}$

iv) $\frac{1}{4}$

Where V is the variance and E is the expectation of X.

P.T.O.

c) If vector field $\vec{F}=(2x+3y)\hat{i}+(4y-2x)\hat{j}+(3x-6mz)\hat{k}$ is solenoidal then the value of m is **[2]**

i) 2

ii) –2

iii) 1

iv) –1

d) If $\phi = x^2 + y^2 + z^2$ then $\nabla\phi$ is **[1]**

i) $2x\hat{i} + 2y\hat{j} + 2z\hat{k}$

ii) $2x + 2y + 2z$

iii) 6

iv) $\hat{i} + \hat{j} + \hat{k}$

e) Using Stoke's theorem $\oint_C \overline{F}.d\overline{r}$ where $\overline{F}=x^2\hat{i}+y^2\hat{j}+z^2\hat{k}$ over the cube whose side is a and its face in XoY plane is missing is equal to **[2]**

i) $\iint_R -x\,dxdy$

ii) $\iint_R y\,dxdy$

iii) $\iint_R 2x\,dxdy$

iv) 0

f) The most general solution of $\frac{\partial^2 y}{\partial t^2} = 4\frac{\partial^2 y}{\partial x^2}$ with boundary condition $y(0, t) = 0$, is given by **[2]**

i) $y(x, t) = C_2 \sin mx\ (C_3 \cos 2mt + C_4 \sin 2mt)$

ii) $y(x, t) = (C_4 \cos mx + C_5 \sin mx)e^{-4m^2 t}$

iii) $y(x, t) = (C_1 \cos mx + C_2 \sin mx)\ (C_3 \cos 2mt + C_4 \sin 2mt)$

iv) None of the above.

Q2) a) Find the acute angle between the two lines of regression obtained from the data **[5]**

x	10	14	19	26	30	35	41
y	12	16	18	26	29	36	38

b) Obtain the coefficient of skewness β_1 and the coefficient of Kurtosis β_2 for the data **[5]**

x	2	4	6	8	10
f	8	6	3	2	1

f denotes frequency.

c) Assume that the probability of an individual coal miner being killed in a mine accident during a year is $\frac{1}{2400}$. Calculate the probability that in a mine employing 400 miners, there will be one fatal accident in a year. **[05]**

OR

Q3) a) A, B play a game of alternate tossing a coin. One who gets head first wins the game. Find the probability of A winning the game if A has a start. Assume the coin to be fair. **[5]**

b) Obtain Karl-Pearson's coefficient of correlation given the table of values **[5]**

x	6	2	10	4	8
y	9	11	5	8	7

c) A set of five similar and fair coins are tossed 3360 times. The result is recorded as follows : **[5]**

# heads	0	1	2	3	4	5
Frequency	32	96	320	896	1536	480

Test the hypothesis that the data follows a Binomial distribution at 5% level of significance. Take $\chi^2_{5,0.05} = 11.07$.

Q4) a) Find the angle between the tangents to the curve $x = t^2 + 1$, $y = t + 2$, $z = t^3 + t$ at $t = 1$ and $t = 2$. **[5]**

b) Find the directional derivative of $\phi = xy^2 + yz^2$ at (2, –1, 1) along the direction normal to the surface $x^2 + y^2 + z^2 = 9$ at (1, 2, 2). **[5]**

c) Show that $\vec{F} = \frac{\vec{a} \times \vec{r}}{r^n}$ is solenoidal. **[5]**

OR

Q5) a) Find the directional derivative of $\phi = e^{2x}\cos yz$ at origin in the direction tangent to the curve $x = a\sin t$, $y = a\cos t$, $z = at$ $t = \pi/4$. **[5]**

b) Prove the following identities (any one) **[5]**

i) $\nabla^2\left[\nabla.\frac{\vec{r}}{r^2}\right]=\frac{2}{r^4}$

ii) $\nabla^4 e^r=\left(1+\frac{4}{r}\right)e^r$

c) Show that $\vec{F}=\left(6xy+z^3\right)\hat{i}+\left(3x^2-z\right)\hat{j}+\left(3xz^2-y\right)\hat{k}$ is irrotational. Find Scalar ϕ such that $\vec{F}=\nabla\phi$. **[5]**

Q6) a) Find the workdone in moving the particle along the straight line joining points (0, 0, 0) and (1, 1, 1) under force field $\bar{F}=\left(2xy+3z^2\right)\bar{i}+\left(x^2+4yz\right)\bar{j}+\left(2y^2+6xz\right)\bar{k}$. **[5]**

b) Evaluate $\iint_S\left(x^3\bar{i}+y^3\bar{j}+z^3\bar{k}\right).d\bar{S}$ where S is surface of the sphere $x^2 + y^2 + z^2 = 16$. **[5]**

c) Evaluate using Stoke's theorem $\iint_S\left(\nabla\times\bar{F}\right).d\bar{S}$ where $\bar{F}=\left(x^3-y^3\right)\bar{i}-xyz\,\bar{j}+y^2\bar{k}$ and S is surface $x^2 + 4y^2 + z^2 - 2x = 4$ above plane $x = 0$. **[5]**

OR

Q7) a) Evaluate $\int_C \bar{F}.d\bar{r}$ along straight line joining (0, 0) and (1, 1) where

$\bar{F}=\left(2x+y^2\right)\bar{i}+\left(3y-4x\right)\bar{j}$. **[5]**

b) Evaluate $\iint_S \left(\nabla\times\bar{F}\right).d\bar{S}$ where S is surface of paraboloid $x^2 + y^2 = 2z$ bounded by plane $z = 2$ and $\bar{F}=3\left(x-y\right)\bar{i}+2xz\,\bar{j}+xy\,\bar{k}$. **[5]**

c) Evaluate by divergence theorem $\iint_S \left(4xz\,\bar{i}-y^2\bar{j}+yz\,\bar{k}\right).d\bar{S}$ over the cube bounded by planes $x = 0$, $x = 2$, $y = 0$, $y = 2$ and $z = 0$, $z = 2$. **[5]**

Q8) a) A tightly stretched string of length l is initially at equilibrium is set to vibration by giving the velocity $\left.\frac{\partial y}{\partial t}\right|_{t=0}=v_0\sin^3\left(\frac{\pi x}{l}\right)$ to each point. Find $y(x, t)$. **[8]**

b) The equation for the conduction of heat along a bar of length l is given by $\frac{\partial u}{\partial t}=C^2\frac{\partial^2 u}{\partial x^2}$, neglecting radiation. Find an expression for u, if the ends of the bar are maintained at zero temperature and if, the temperature is T initially, at the centre of the bar and falls uniformly to zero at its ends. **[7]**

OR

Q9) a) If $\frac{\partial^2 y}{\partial t^2} = C^2 \frac{\partial^2 y}{\partial x^2}$ represents vibrations of string of length l fixed at both ends, find the solution if **[8]**

i) $y(0, t) = 0$

ii) $y(l, t) = 0$

iii) $\left.\frac{\partial y}{\partial t}\right|_{t=0} = 0$ and

iv) $y(x, 0) = k(l_x - x^2)$, $0 \leq x \leq l$.

b) A rectangular plate is bounded by $x = 0$, $x = a$, $y = 0$ & $y = b$. Its temperature along the three edges $x = 0, x = a$ and $y = 0$ are maintained at 0ºC white the fourth edge $y = b$ is maintained at constant temperature U_0 °C until steady state reached. Find $u(x, y)$, if u satisfies the equation

$$\frac{\partial^2 u}{\partial x^2} + \frac{\partial^2 u}{\partial y^2} = 0 .$$ **[7]**



Total No. of Questions : 8]

SEAT No. : ____

P592

[Total No. of Pages : 2

[5869] - 205
S.E. (Civil Engineering)
ENGINEERING GEOLOGY
(2019 Pattern) (Semeser - III) (207009)

Time : 2½ Hours] ***[Max. Marks : 70***

Instructions to the candidates:

1) ***All questions are compulsory.***
2) ***Black figures to the right indicate full marks.***
3) ***Neat diagrams should be drawn wherevern necessary.***

Q1) a) What is fold? Describe how fold passes in the fault. **[6]**

b) Describe types of joints and their civil engineering significance. **[5]**

c) Write short notes on **[6]**

i) Inliers and outliers

ii) Strike and dip of rocks.

OR

Q2) a) Explain various parts and any two types of faults with neat sketches. **[6]**

b) Write a note on angular and non-conformity. **[5]**

c) How folds are developed? Explain any two types of folds. **[6]**

Q3) a) What is remote sensing? Explain its importance in civil engineering field. **[6]**

b) Explain in brief the importance of preliminary geological exploration in civil engineering project. **[6]**

c) G.I.S. is an important tool for civil engineering projects. **[6]**

OR

Q4) a) Discuss in detail drilling as a method of subsurface geological explortion. Give its limitations. **[6]**

b) Write a note on applications of remote sensing. **[6]**

c) What is the effects of faulting and their significance in civil engineering. **[6]**

P.T.O.

Q5) a) Explain tunneling conditions in Deccan trap region. **[6]**

b) Discuss in detail preliminary geological work on dam and reservoir. **[6]**

c) What are the geological requirement for the foundation of dam? **[6]**

OR

Q6) a) Discuss in detail preliminary geological investigations of tunneling. **[6]**

b) Discuss in detail the studies to be carried out in reservoir areas of a dam. **[6]**

c) Write a note on the dam located on folded geological structure. **[6]**

Q7) a) Describe in brief the various preventive measures against landslides. **[6]**

b) Explain requirements of a good building stone. **[5]**

c) Explain seismic waves in detail. **[6]**

OR

Q8) a) Discuss in detail volcanoes. Write in short the products of volcanoes. **[6]**

b) Write in brief on types of Groundwater. **[5]**

c) How landslides can be prevented? Explain **[6]**

Total No. of Questions : 8]

SEAT No. : ____

P593

[Total No. of Pages : 3

[5869]-206
S.E. (Civil)
GEOTECHNICAL ENGINEERING
(2019 Pattern) (Semester - IV) (201008)

Time : 2½ Hours] ***[Max. Marks : 70***

Instructions to the candidates:

1) ***Answer Q.1 or Q.2, Q.3 or Q.4, Q.5 or Q.6, Q.7 or Q.8.***
2) ***Neat diagrams must be drawn whenever necessary.***
3) ***Figures to the right indicate full marks.***
4) ***Assume suitable data, if necessary and mention it clearly.***
5) ***Use of non-programmable calculator is allowed.***

Q1) a) Differentiate between light compaction test and heavy compaction test. Draw typical compaction curve for both test. **[6]**

b) Describe "Proctor needle in field compaction control". **[6]**

c) State and explain the terms involved in Boussinesq's circular load equation for vertical stress determination. **[6]**

OR

Q2) a) Explain the factors affecting Compaction of soil. **[6]**

b) What is pressure bulb? Explain its significance and draw a neat sketch of pressure bulb for concentrated point loading. **[6]**

c) A concentrated load of 25 kN acts on the surface of homogeneous soil mass of large extend. Calculate stress intensity at a depth of 8.0m by using Boussinesq's theory at a horizontal distance of 2.5m. **[6]**

Q3) a) State Mohr- Coulomb's equation for shear strength of soil. Discuss the factors which affect the shear strength parameters of soil. **[6]**

P.T.O.

b) Determine the shear strength in terms of effective stress on a plane within a saturated soil mass at a point where the total normal stress is 200 kN/m^2 and pore water pressure is 80 kN/m^2. The shear strength parameters in terms of effective stress are, c' = 16 kN/m^2 and $\Phi' = 39^0$. **[6]**

c) Explain different drainage conditions in triaxial test. **[5]**

OR

Q4) a) State and explain the merits and demerits of direct shear test. **[6]**

b) In a consolidated drained triaxial test, a specimen of a clay fails at a cell pressure of 60 kN/m^2.The effective shear strength parameters are c = 15 kN/m^2 and φ =20°. Determine the additional stress required for the failure. **[6]**

c) Explain vane shear test procedure with a neat sketch and formula. **[5]**

Q5) a) Discuss coulomb's wedge theory for determination of earth pressure. **[6]**

b) A wall with a smooth vertical back, 10m high, supports a purely cohesive soil with c = 9.81 kN/m^2, & γ = 17.66 kN/m^3. Determine (i) Total Rankin's active pressure against the wall; (ii) Position of zero pressure. **[6]**

c) Explain Rehbann's graphical method for evaluation of earth pressure. **[6]**

OR

Q6) a) Describe effect of wall moment with respect to earth pressure. **[6]**

b) Compute the intensity of active earth pressure at a depth of 8 m in dry cohesionless sand with an angle of internal friction 30^0 and unit weight of 18 kN/m^3. **[6]**

c) Explain Culmann's graphical method for evaluation of earth pressure. **[6]**

Q7) a) Classify the different modes of failure of finite and infinite slopes. **[6]**

b) Discuss causes and remedial measures of Landslides. **[6]**

c) Analyze the stability of soil using friction circle method with neat sketch. **[5]**

OR

Q8) a) Explain the various methods to protect slopes from failure with clear sketch. Also list out the factors to be considered in selection of suitable method. **[6]**

b) Explain steps involved in the stability analysis of slopes by method of slices. **[6]**

c) Discuss "Taylor's Stability Number" for stability analysis of finite slope. **[5]**

❄ ❄ ❄

Total No. of Questions : 8]

SEAT No. :

P594

[Total No. of Pages : 2

[5869] - 207
S.E. (Civil)
SURVEY
(2019 Pattern) (Semester - IV)

Time : 2½ Hours] *[Max. Marks : 70*

Instructions to the candidates :

1) ***Answer Q. 1 or Q.2, Q.3 or Q.4, Q.5 or Q.6, Q.7 or Q.8.***
2) ***Neat sketches must be drawn wherever necessary.***
3) ***Figures to right indicate full marks.***
4) ***Assume suitable data if necessary.***
5) ***Use of electronic pocket calculator is allowed.***
6) ***Use of cell phone is prohibited in examination hall.***

Q1) a) Explain theory of stadia tacheometry? **[6]**

b) State the procedure for tacheometric contouring? **[6]**

c) What is mean by profile levelling and cross-sectioning? **[6]**

OR

Q2) a) State characteristics and uses of contour lines. **[5]**

b) The following observations were made using a tacheometer fitted with an anallatic lens, Staff held vertically and multiplying constant being 100.

Instrⁿ. Station	Instrⁿ. Height.	Staff Station	Vertical Angle	Hair Reading	Remark
P	1.450	BM	-6° 12'	0.980, 1.540, 2.100.	RL of B.M = 384.25m
P	1.450	Q	+7° 5'	0.830, 1.360, 1.890.	

Determine RL of point Q and distance PQ. **[7]**

c) Sate the principle of stadia tacheometry? What are the types of stadia? **[6]**

Q3) a) Draw a neat sketch of curve and write equation for the following in terms of radius of curve (R) and deflection angle (ϕ). **[5]**

i) Long Chord ii) Versed sine

iii) Apex distance

P.T.O.

b) Two straights road intersects at a chainage of 2550.50m. The angle of deflection being 70°. Taking chord length of 30 m, calculate –

i) Radius of curve ii) Length of curve

iii) Tangent length iv) Length of long chord

v) Chainage at starting point (T_1) and end point (T_2)of Curve **[7]**

c) Derive the expression for setting out of curve by offset from long chord method. **[5]**

OR

Q4) a) State various obstacles in setting out curves. Explain the procedure of setting out simple curve when point of intersection is inaccessible. **[5]**

b) What is transition curve, state the applications of transition curve? **[4]**

c) Two straights AB and BC meet at chainage of 3450 m. A right handed simple circular curve of 250 m radius joins them. The deflection angle between two straights is 50°. Tabulate the necessary data to layout the curve by Rankine's method of deflection angle. Take chord length as 20 m. **[8]**

Q5) a) State segments and uses of Space Based Positioning System (SBPS). **[6]**

b) Explain the procedure of establishing alignment of road? **[6]**

c) Enlist different names of satellite and state features of any two of them. **[6]**

OR

Q6) a) Describe the procedure of setting out drainage line. **[6]**

b) Explain in brief procedure of setting out of tunnel centreline and transferring underground? **[6]**

c) State the applications of SBPS surveying? **[6]**

Q7) a) What do you mean by triangulation and trilateration in geodetic survey? **[6]**

b) State the applications of aerial photogrammetry in surveying? **[5]**

c) Define Sounding and state any one method of sounding with sketch? **[6]**

OR

Q8) a) What are different methods of sounding, State any one method in detail? **[6]**

b) Sate the working principle and applications of total station? **[6]**

c) Differentiate between Map and aerial photograph? **[5]**

▽▽▽▽

Total No. of Questions : 8]

SEAT No. : ____

P595

[Total No. of Pages : 4

[5869]-208
S.E. (Civil)
CONCRETE TECHNOLOGY
(2019 Pattern) (Semester - IV)

Time : 2½ Hours] ***[Max. Marks : 70***

Instructions to the candidates:

1) ***Answer Q.1 or Q.2, Q.3 or Q.4, Q.5 or Q.6, Q.7 or Q.8.***
2) ***Bold figures to the right indicate full marks.***
3) ***Neat diagrams must be drawn whenever necessary.***
4) ***Use of non programmable calculator is allowed in the examination.***
5) ***Your answers will be valued as a whole.***
6) ***If necessary assume suitable data and indicate clearly.***
7) ***Use of IS codes 10262, 456 is not allowed.***

Q1) a) Explain the effect of water cement ratio and effect of maximum size of aggregate on the strength of concrete. **[9]**

b) Explain the relation between compressive and tensile strength of concrete **[8]**

OR

Q2) a) Enlist non destructive tests for concrete. Explain rebound hammer test along with its limitations. **[9]**

b) Explain flexural strength test on concrete with neat sketch **[8]**

Q3) a) Define concrete mix design. Enlist objectives in mix design as well as factors affecting the mix design. **[9]**

b) Enlist the various methods of concrete mix design. Write step by step procedure for concrete mix design by using DOE method. **[9]**

OR

P.T.O.

Q4) a) Design a concrete for grade M25 using IS code method for following data: **[14]**

Parameter	:	Details
Grade designation	:	M25
Standard deviation,s	:	4.00
Factor based on the grade of concrete, X	:	5.50
Type of cement	:	OPC 53 grade conforming to IS 8112
Workability	:	75 mm (slump)
Exposure conditions	:	Moderate (for RCC)
Degree of supervision	:	Good
Maximum cement content	:	450 kg/m^3
Type of aggregate	:	Angular coarse aggregate
Specific gravity of cement	:	3.15
Specific gravity of coarse aggregate and fine aggregate	:	2.70
Water absorption of coarse aggregate	:	0.50%
Water absorption of fine aggregate	:	1.00%
Free surface moisture for coarse aggregate		Nil
Free surface moisture for fine aggregate		Nil
Sieve Analysis	:	

Coarse aggregate

IS Sieve (mm)	Analysis of coarse aggregate fraction		Percentage of different fractions			Remarks
	I	II	I (50%)	II (50%)	Combined (100%)	
20	100	100	50	50	100	Conforming to Table 7 of IS 383
10	2.80	78.30	1.4	39.15	40.55	
4.75	0	8.70	0	4.35	4.35	

Fine aggregate : Conforming to grading Zone II of Table 9 of IS 383

Water Content per m^3 of concrete for 50 mm slump :

Sr. No.	Nominal maximum size of aggregate (mm)	Maximum water content (kg/m^3)
i)	10	208
ii)	20	186
iii)	40	165

Volume of coarse aggregate per unit volume of total aggregate for water - cement/water-cementitious material ratio of 0.30 :

Sr. No.	Nominal maximum size of aggregate (mm)	Volume of coarse aggregate per unit volume of total aggregate for different zones of fine aggregate		
		Zone III	Zone II	Zone I
i)	10	0.56	0.54	0.52
ii)	12.5	0.58	0.56	0.54
iii)	20	0.68	0.66	0.64

Approximate air content

Sr. No.	Nominal maximum size of aggregate (mm)	Entrapped air, as % of volume of concrete
i)	10	1.0
ii)	12.5	0.8
iii)	20	0.5

Minimum cement content, maximum W/C and minimum grade of concrete for different exposures with normal weight aggregates of 20 mm nominal maximum size :

Sr. No.	Exposure	Minimum cement Content (kg/m^3)	Maximum W/C	Minimum grade of concrete
i)	Mild	300	0.55	M20
ii)	Moderate	300	0.50	M25
iii)	Severe	320	0.45	M30
iv)	Very severe	340	0.45	M35
v)	Extreme	360	0.40	M40

b) What do you mean by : **[4]**

i) Mean strength

ii) Variance

iii) Standard deviation

iv) Coefficient of variation

Q5) a) Write short note on : **[8]**

i) Roller compacted concrete

ii) Under water concreting

b) Explain the cold and hot weather concreting. **[9]**

OR

Q6) a) Write short note on : **[8]**

i) Fiber reinforced concrete

ii) Geo-polymer concrete

b) What do you meant by light weight concrete and discuss its types. **[9]**

Q7) a) Define durability of concrete. Explain its significance and discuss the factors affecting the durability of concrete **[9]**

b) Write short note on : **[9]**

i) Sulphate attack on concrete

ii) Chloride attack on concrete

iii) Carbonation of concrete

OR

Q8) a) Write short note on : **[12]**

i) Evaluation of cracks in concrete and its necessity

ii) Symptoms and diagnosis of distress

iii) Corrosion monitoring and preventive measures

b) Discuss the application of fiber reinforced polymer (FRP) and polymer impregnated concrete for the retrofitting of concrete structures. **[6]**

❄ ❄ ❄

Total No. of Questions : 8]

SEAT No. :

P596

[Total No. of Pages : 4

[5869]-209
S.E. (Civil)
STRUCTURAL ANALYSIS
(2019 Pattern) (Semester - IV) (201011)

Time : 2½ Hours] *[Max. Marks : 70*

Instructions to the candidates:

1) ***Answer Q1 or Q2, Q3 or Q4, Q5 or Q6, Q7 or Q8.***
2) ***Neat diagrams must be drawn wherever necessary.***
3) ***Figures to the right indicate full marks.***
4) ***Assume suitable data if necessary.***
5) ***Use of electronic pocket calculator is allowed.***
6) ***Use of cell phone is prohibited in the examination hall.***

Q1) a) Analyze the beam shown in figure 1 by slope deflection method and draw BMD. Assume uniform flexural rigidity. **[12]**

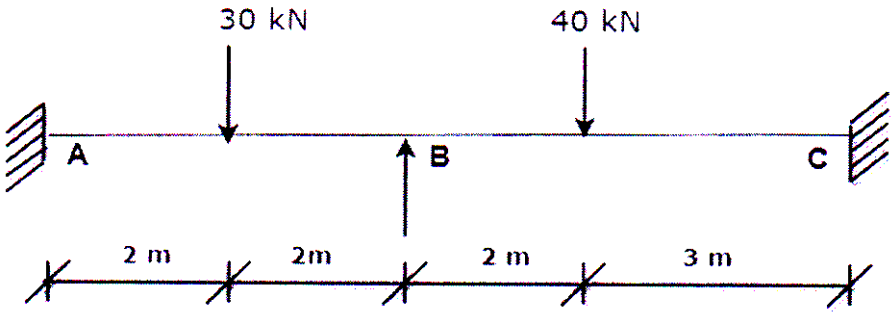

Figure 1

b) Find the rotation B (θ_B) for the beam with uniform flexural rigidity as shown in figure 2. **[6]**

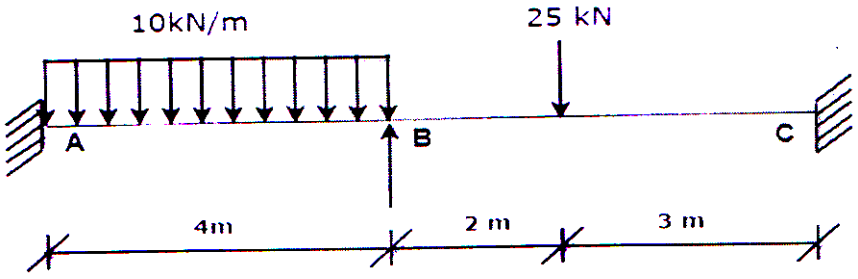

Figure 2

OR

P.T.O.

Q2) a) Analyze the frame shown in figure 3 by slope deflection method and draw BMD. Assume uniform flexural rigidity. **[12]**

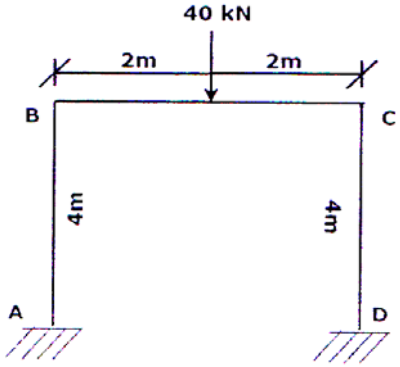

Figure 3

b) Analyse the bent shown in figure 4 by slope deflection method. Assume uniform flexural rigidity. **[6]**

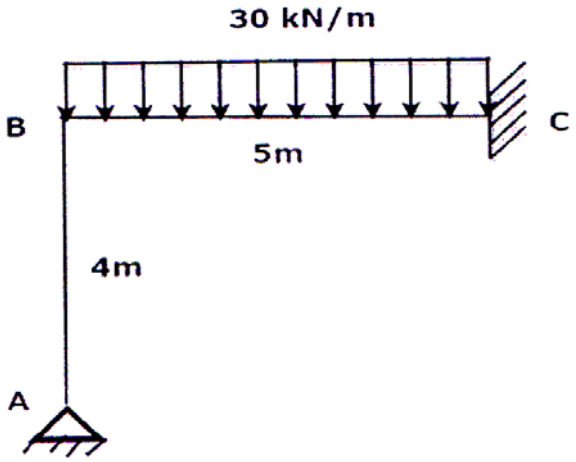

Figure 4

Q3) a) Analyze the continuous beam ABC shown in figure 5 by moment distribution method. Assume uniform flexural rigidity. **[9]**

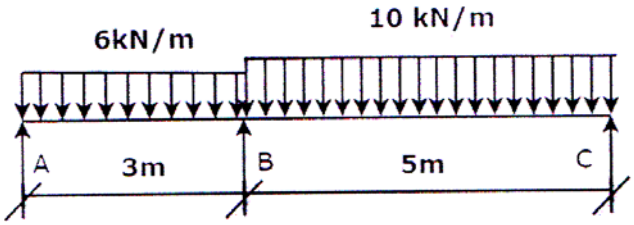

Figure 5

b) Analyse the continuous beam shown in figure 6 by moment distribution method. Assume uniform flexural rigidity. **[9]**

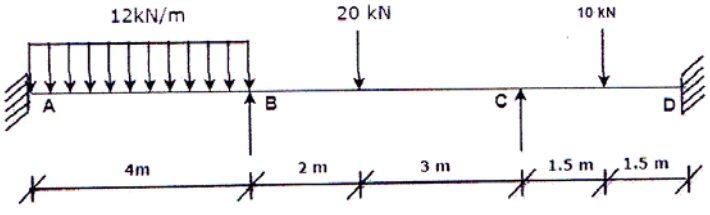

Figure 6

OR

Q4) a) Calculate moment at supports for the frame as shown in figure 7 by moment distribution method and draw BMD. Assume uniform flexural rigidity. **[12]**

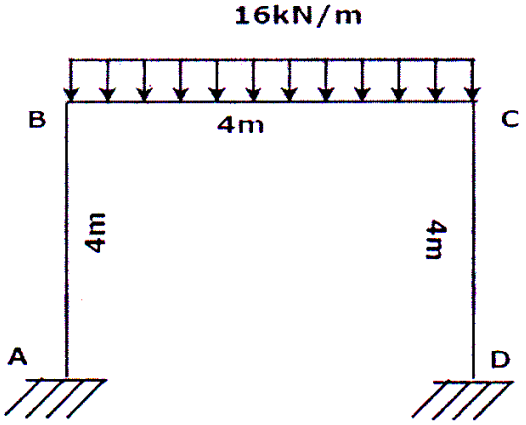

Figure 7

b) Define member stiffness; carry over moment and distribution factor. **[6]**

Q5) a) Analyse the continuous beam as shown in figure 8 by stiffness method. Assume same flexural rigidity or all members. **[12]**

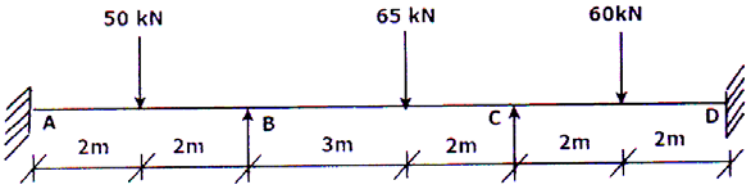

Figure 8

b) Write note on stiffness method and write elements of displacement matrix for following figure. **[5]**

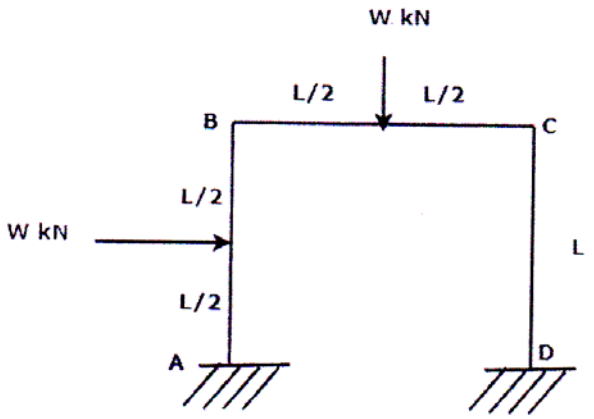

Figure 9

OR

Q6) a) Explain degrees of freedom, stiffness. **[4]**

b) Analyse the frame shown in figure 10 by stiffness method and draw bending moment diagram. **[13]**

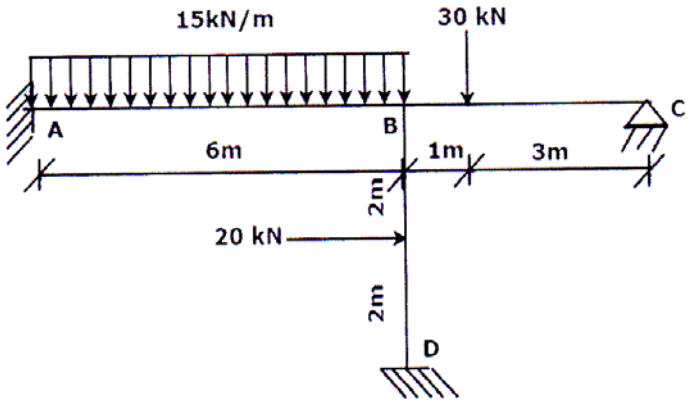

Figure 10

Q7) a) Define plastic hinge, load factor and shape factor. **[6]**

b) A three span continuous beam ABCD is loaded with ultimate loads as shown in figure 11. Determine the required plastic moment of resistance when the beam is of uniform section. **[11]**

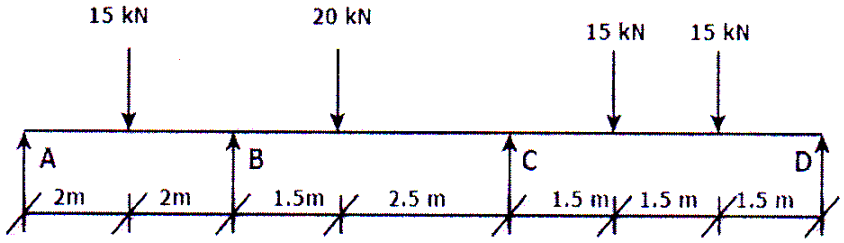

Figure 11

OR

Q8) a) Explain the idealized stress strain curve for plastic analysis with diagram and state the assumption for plastic analysis. **[6]**

b) Calculate shape factor for I section as per the dimension given : Top and bottom flange : 150 mm wide and 9.4 mm deep Web : 6.7 mm wide and 281.2 mm deep. **[11]**



Total No. of Questions : 8]

SEAT No. :

P597

[Total No. of Pages : 3

[5869]-210

S.E. (Civil)

PROJECT MANAGEMENT

(2019 Pattern) (201012) (Semester - IV)

Time : 2½ Hours] ***[Max. Marks : 70***

Instructions to the candidates:

1) ***Answer Q1 or Q2, Q3 or Q4, Q5 or Q6, Q7 or Q8.***
2) ***Neat diagrams must be drawn whenever necessary.***
3) ***Figures to the right indicates full marks.***
4) ***Assume suitable data, if necessary.***

Q1) a) Carry out ABC analysis for the following items and plot ABC curve. **[10]**

Item No.	Item	Annual Expenditure (Rs.)
1	Cement	5,00,000
2	Sand	3,00,000
3	Bricks	1,00,000
4	Siporex Blocks	2,50,000
5	Paint	60,000
6	Steel	4,50,000
7	Tiles	70,000
8	Oil	2,000
9	Course Aggregate	95,000
10	Electrical fitting	50,000
11	Nails	1,500
12	Timber	42,000

b) What are the responsibilities of a safety manager on construction sites? **[4]**

c) Explain the use of Project Management Software's in Construction Industry. **[4]**

OR

P.T.O.

Q2) a) Define the terms : **[8]**

i) Safety stock

ii) Lead time

iii) Inventory

iv) EOQ

b) What are the objectives of material management? **[4]**

c) A construction company purchases 10,000 bags of cement annually. Each bag of cement cost Rs. 300/- and the cost incurred in procuring each lot is Rs. 200/-. The cost of carrying is 25%. What is the most Economic order Quantity? What is the average inventory level? **[6]**

Q3) a) What is network crashing? Explain with suitable example. **[8]**

b) Explain resource smoothing and leveling. Use diagram wherever required. **[5]**

c) Explain Project Management software in construction site planning. **[4]**

OR

Q4) a) What do you mean by Earned Value Analysis? Explain any one method in detail. **[5]**

b) What are the objectives of Resource leveling? Explain the procedure of carryout resource leveling. **[8]**

c) Explain the term Rescheduling and Updating. **[4]**

Q5) a) Explain demand and supply curve and factors affecting on it. **[5]**

b) How to calculate simple and compound interest? What is the difference between simple interest and compound interest payable on principal of Rs. 15,000 in 2 years at the rate of 8% p.a. **[8]**

c) What are the factors affecting on Price Determination? **[5]**

OR

Q6) a) Difference between Costs, Value. **[8]**

b) Explain the types of Capital. **[6]**

c) Explain the FDI in Infrastructure. **[4]**

Q7) a) Following are the details of Project A and B. Using NPV (i = 8%). Comment on the following statements: **[10]**

i) Whether both projects are feasible?

ii) Whether both projects are not feasible?

iii) Either of the A or B is feasible?

Years	Project A	Project B
Initial Investment	4,00,000	4,50,000
1	1,20,000	1,40,000
2	1,25,000	1,45,000
3	78,000	76,000
4	80,000	65,000
5	75,000	60,000
6	-	90,000

b) Explain in detail the role of Project Management Consultants in Civil Engineering field. **[7]**

OR

Q8) a) Write a short note on: **[9]**

i) NPV

ii) IRR

iii) Pay-Back Period

b) Discuss the following: **[8]**

i) Selection Criteria for project

ii) Detailed Project report



Total No. of Questions : 8]

SEAT No. : ____

P977

[Total No. of Pages : 2

[5869]-212

S.E. (Automobile & Mechanical Engineering / Automation & Robotics & Mechanical Sandwich)

SOLID MODELING AND DRAFTING

(2019 Pattern) (Semester - II) (Theory)

Time : 2½ Hours] ***[Max. Marks : 70***

Instructions to the candidates:

1) ***Slove Q.1 or Q.2, Q.3 or Q.4, Q.5 or Q.6, Q.7 or Q.8.***
2) ***Neat diagrams must be drawn wherever necessary.***
3) ***Figures to the right indicate full marks.***
4) ***Use of programmable calculator is not permitted.***
5) ***Assume suitable data, if necessary.***

Q1) a) Explain B-rep-CSG? **[8]**

b) What is solid modeling? Explain it with types and advantages? **[6]**

c) What is feature based modeling? Explain in brief? **[4]**

OR

Q2) a) What is Geometry & Topology? Also differentiate between Sweep & Loft? **[6]**

b) What is parametric modeling? Explain it in brief? **[6]**

c) Explain Assembly modeling & DFA? **[6]**

Q3) a) What is the transformation? Explain it in details with classification? **[6]**

b) Given a square with coordinate with coordinates points A (0,3),B (3,3),C(3,0) and D (1,0). App the translation with distance 1 towards x axis and 1 with towards Y axis. obtain the new coordinates of the square. **[8]**

c) What is scaling? Explain with neat sketch. **[4]**

OR

Q4) a) Differentiate between rotation, translation & Mirror. **[6]**

b) Given a line segment with starting point as (0,0) and ending points as (4,4) Apply 30 degree rotation anticlockwise direction on the line segment and find out the new coordinates of the line. **[8]**

c) Explain coordinate system with types in brief? **[4]**

P.T.O.

Q5) a) Explain CAD Kernels with types **[6]**

b) Explain STEP with scope and Architecture. **[6]**

c) Explain requirement of CAD file format for CAE. **[6]**

OR

Q6) a) Explain requirement of CAD file format for Multi-Body Dynamics. **[6]**

b) Explain requirement of CAD file format for computer Aided Inspection (CAI) **[6]**

c) Explain CAD geometry cleanup and tools used for it. **[6]**

Q7) a) Explain model based definitions (MBD) with advantages. **[6]**

b) What is CAD customization? Explain it with advantages and disadvantages? **[6]**

c) State applications of PMI & MBD. **[4]**

OR

Q8) a) Explain Development in part Modeling in CAD Customization. **[6]**

b) Explain Assembly Modeling CAD Customization. **[6]**

c) Explain Application programming Interface (API) **[4]**

● ● ●

Total No. of Questions : 08]

SEAT No. : ____

P598

[Total No. of Pages : 2

[5869] - 213

S.E. (Automobile & Mechanical/Mechanical Sandwich) ENGINEERING THERMODYNAMICS (2019 Pattern) (Semester - III)

Time : 2½ Hours] ***[Max. Marks : 70***

Instructions to the candidates :

1) ***Answer Q.1 or Q.2, Q.3 or Q.4, Q.5 or Q.6, Q.7 or Q.8.***
2) ***Neat diagrams must be drawn wherever necessary.***
3) ***Figures to the right side indicate full marks.***
4) ***Assume suitable data, if necessary.***
5) ***Use of electronic pocket calculator is allowed.***

Q1) a) State various application of Entropy. **[8]**

b) A small metallic object of 5kg mass and at a temperature of 227°c is thrown in a tank of at temperature calculate change in entropy of the universe **[9]**

OR

Q2) a) Explain Helmholtz and Gibbs functions. **[8]**

b) Difference between unavailable and available energy. **[9]**

Q3) a) Write a short notes on : **[9]**

i) Critical Point ii) Enthalpy of Steam

iii) Triple Point

b) Determine superheated entropy, enthalpy and specific volume for a steam at 20 bar and 250°c using steam table. **[9]**

OR

Q4) a) Explain Rankin cycle. **[9]**

b) Difference between Rankin cycle and Carnot cycle. **[9]**

P.T.O.

Q5) a) Write down the advantages and disadvantages of gaseous fuel. **[8]**

b) Explain BOMB Calorimeter with a schematic diagram **[9]**

OR

Q6) a) Explain Calorific Value. **[8]**

b) A Bomb calorimeter water used to determine the calorific value of a coal sample and the following reading where recorded **[9]**

Mass of coal sample = 1.01 gm

Mass of water = 2.5 kg

Water equivalent of apparatus = 744 gm

Temperature of rise water = 2.59°c

Temperature correction of cooling = + 0.016°c

Determine the calorific value of sample in kj/kg

Take c_p for water 4.186kj/kg k.

Q7) a) Classify The Boilers **[9]**

b) Explain Benson Boiler with a schematic diagram. **[9]**

OR

Q8) a) Explain Economizer. **[9]**

b) A boiler evaporates 3.6 kg of water per kg of coal is saturated steam at 10 bar. The temperature of feed water is 32°c. Find the equivalent evaporation. From and at 100°c as well as the factor of Evaporator. **[9]**

▽▽▽▽

Total No. of Questions : 8]

SEAT No. :

P599

[Total No. of Pages : 2

[5869]-214

S.E. (Common with Automation & Robotics / Automobile & Mechanical Engineering / Mechanical Sandwich)

ENGINEERING MATERIALS AND METALLURGY

(2019 Pattern) (Semester - III) (202044)

Time : 2½ Hours] *[Max. Marks : 70*

Instructions to the candidates:

1) ***Neat diagrams must be drawn wherever necessary.***
2) ***Figures to the right side indicate full marks.***

Q1) a) With neat labels draw Iron Carbon Equilibrium Diagram? **[8]**

b) Discuss nucleation & crystal growth in solidification of pure metals? **[6]**

c) Explain process of perlite formation from austenite? **[4]**

OR

Q2) a) What is Equilibrium diagram? With diagram explain three important reactions in Iron Carbon Equilibrium diagram? **[8]**

b) Explain Gibbs phase rules for metallurgical application? **[6]**

c) Discuss Homeothermy rule for substitutional solid solutions? **[4]**

Q3) a) Draw isothermal time temperature transformation diagram? **[6]**

b) Define annealing and explain types of annealing? **[6]**

c) What is retained austenite & how it affects properties of steel? List process to remove retain austenite? **[5]**

OR

Q4) a) What is tempering process? Why tempering is carried out after hardening? List classification and application of tempering process? **[6]**

b) Write short note on carburizing and list its applications? **[6]**

c) Define hardenability? Differentiate between austempering and Martempering with diagram. **[5]**

Q5) a) Define steel? Explain classification of steel with applications. **[6]**

b) Write short note on tool steel? **[6]**

c) Explain sensitization of stainless steel? **[5]**

OR

P.T.O.

Q6) a) Define Cast Iron? Explain classification of Cast iron with applications. **[6]**

b) Discuss effect of alloying elements on steel? **[6]**

c) Write short note on stainless steel? **[5]**

Q7) a) Differentiate between brass and bronze? (Compositions, application). **[6]**

b) Write short note on Invar? **[6]**

c) What is Additive Manufacturing? List few additive manufacturing materials with their applications? **[6]**

OR

Q8) a) What is Age Hardening? Explain with example application of age hardening. **[6]**

b) Write short note on Satellite Alloys? **[6]**

c) List various properties required for bearing material? **[6]**



Total No. of Questions : 8]

SEAT No. :

P978

[Total No. of Pages : 2

[5869] - 215

S.E. (Automobile & Mechanical/Mechanical (Sandwich))

ELECTRICAL AND ELECTRONICS ENGINEERING

(2019 Pattern) (Semester - III) (203156)

Time : 2½ Hours] ***[Max. Marks : 70***

Instructions to the candidates :

1) ***Attempt Q.1 or Q.2, Q.3 or Q.4, Q.5 or Q.6, Q.7 or Q.8.***
2) ***Neat diagrams must be drawn wherever necessary.***
3) ***Figures to the right side indicate full marks.***
4) ***Assume suitable data, if necessary.***

Q1) a) Draw a neat sketch of 4 - Pole DC machine. Label main parts of it. State the function of any three parts. **[6]**

b) Derive an expression for armature torque developed in a DC motor. **[6]**

c) A 250 V DC shunt motor with armature resistance of 0.5Ω runs at 600 rpm on full load and draws an armature current of 20A. If resistance of 1Ω is added in series with armature winding, find the speed at half load condition. Assume that flux is maintained constant. **[6]**

OR

Q2) a) Explain any two methods of speed control of DC shunt motor. **[6]**

b) Explain regenerative braking in a DC shunt motor with the help of neat diagrams. Also enlist any two applications of regenerative braking. **[6]**

c) The armature resistance of a DC shunt motor is 5.8 Ω. At full load condition, it runs at 1725 rpm drawing armature current of 10A from 230 V DC supply. Find full load torque and starting torque. Assume that flux is maintained constant. **[6]**

Q3) a) Derive general expression for torque in a three phase induction motor and hence obtain condition for maximum torque. **[6]**

b) Draw a neat sketch of star- delta starter used for starting a three phase induction motor and explain it's operation. **[6]**

c) A 6 - pole, 50 Hz, 3 phase induction motor runs at 960 rpm when torque on shaft is 200 Nm. If the stator losses are 1400 W, friction and windage loss are 550 W, calculate i) Power output ii) Rotor copper loss. **[5]**

P.T.O.

OR

Q4) a) Describe in brief any one method for the speed control of a three phase induction motor. **[6]**

b) A 3 phase induction motor having 6 - pole, star- connected stator winding runs on 240 V, 50 Hz supply. The rotor resistance and standstill reactance are 0.12Ω and 0.85 Ω per phase. The ratio of stator to rotor turns is 1.8. full load slip is 4%. Calculate the i) Torque at full load and ii) Maximum torque. **[6]**

c) Explain in brief about the modification in squirrel cage motor with deep bar rotor construction and state the advantages of this modified construction. **[5]**

Q5) a) What is an Electric Vehicle (EV)? Explain in detail functions of components of an EV. **[6]**

b) Explain the impact of use of electric vehicles on power grid. **[6]**

c) Differentiate between Battery EV and Hybrid EV. **[6]**

OR

Q6) a) What are types of Electric Vehicles? Explain in detail schematic of fuel Cell EV. **[6]**

b) Explain the Configuration of a series Hybrid EV. **[6]**

c) Elaborate on the challenges faced by EV technology in present context. **[6]**

Q7) a) Mention the ingredients of cathode and anode for following batteries. **[6]**

i) LFP battery

ii) NMC battery

iii) LMO battery

b) Explain the operation of a three phase induction motor drive for an EV with the help of a block diagram. **[6]**

c) Explain the working of hydrogen fuel cell. **[5]**

OR

Q8) a) Draw the block diagram of Battery Management system (BMS) and explain the working of it. **[6]**

b) State advantages and disadvantages of LFP Battery. **[6]**

c) Explain the factors for selection of motor for an EV. **[5]**

◆◆◆

Total No. of Questions : 9]

SEAT No. : ____

P601

[Total No. of Pages : 4

[5869]-216

S.E. (Automobile & Mechanical/Mechanical (Sandwich)/Automation & Robotics/Mechatronics)

ENGINEERING MATHEMATICS - III

(2019 Pattern) (207002) (Semester - IV)

Time : 2½ Hours] ***[Max. Marks : 70***

Instructions to the candidates:

1) ***Question No. 1 is compulsory.***
2) ***Solve Q2 or Q3, Q4 or Q5, Q6 or Q7, Q8 or Q9.***
3) ***Neat diagrams must be drawn whenever necessary.***
4) ***Figures to the right indicate full marks.***
5) ***Use of logarithmic tables slide rule, Mollier charts, electronic pocket calculator and steam tables is allowed.***
6) ***Assume suitable data, if necessary.***

Q1) a) If $\phi = x^2 - y^2 - z^2$ then $\nabla\phi$ at point (1, 2, 3) is **[2]**

i) $2\hat{i} - 4\hat{j} - 12\hat{k}$ ii) $2\hat{i} - 4\hat{j} + 12\hat{k}$

iii) $2\hat{i} + 4\hat{j} + 12\hat{k}$ iv) $\hat{i} + \hat{j}$

b) The most general solution of the partial differential equation $\frac{\partial^2 u}{\partial x^2} + \frac{\partial^2 u}{\partial y^2} = 0$ representing metal plate having length x and breadth $y \to \infty$ is **[2]**

i) $\left(c_1 \cos mx + c_2 \sin mx\right)\left(c_3 e^{my} + c_4 e^{-my}\right)$

ii) $\left(c_1 e^{mx} + c_2 e^{-mx}\right)$

iii) $\left(c_1 \cosh mx + c_2 \sinh mx\right)\left(c_3 \cos my + c_4 \sin my\right)$

iv) $\left(c_1 e^{mx} + c_2 e^{-mx}\right)$

c) The standard deviation and arithmetic mean of the distribution are 4.89898 and 17 respectively. Coefficient of variation of distribution is **[2]**

i) 26.12 ii) 28.82

iii) 21.82 iv) 25.82

d) X is normally distributed. The mean of X is 0.7 and standard deviation is 0.05. Then probability of $p\left(x \geq 0.8\right)$ is (Given : $z = 2$, A = 0.4772) **[2]**

i) 0.5228 ii) 0.0228

iii) 0.9772 iv) 0.4772

P.T.O.

e) Coefficient of correlation always lies between **[1]**

i) $-1 \le r \le 1$ ii) $0 \le r \le 1$

iii) $-2 \le r \le 2$ iv) $-1 \le r \le 0$

f) If $\bar{r} = x\hat{i} + y\hat{j} + z\hat{k}$ then ∇r is **[1]**

i) r ii) $\frac{\bar{r}}{r}$

iii) $\bar{r}$ iv) 0

Q2) a) Fit a straight line for the following data **[5]**

x	1	2	3	4	5	6	7	8	9
y	9	8	10	12	11	13	14	16	15

b) Calculate first four moments about the mean of the following distribution. **[5]**

x	0	1	2	3	4	5	6	7	8
f	1	8	28	56	70	56	28	8	1

c) Find the coefficient of correlation for following data. **[5]**

x	78	36	98	25	75	82	90	62	65	39
y	84	51	91	60	68	62	86	58	53	47

OR

Q3) a) The results of measurements of electric resistance R of a copper bar at various temperature are listed below. Find a relation R = $a + bt$ **[5]**

t	19	25	30	36	40	45	50
R	76	77	79	80	82	83	85

b) First four moments of a distribution about the value 2 are 1, 2.5, 5.5 and 16. Find first four moments about the mean, β_1 & β_2. **[5]**

c) Obtain regression lines for the following data. **[5]**

x	2	3	5	7	9	10	12	15
y	2	5	8	10	12	14	15	16

Q4) a) A class has 12 boys and 4 girls. Suppose three students are selected at random from the class. Find the probability that they are all boys. **[5]**

b) Out of 2000 families with 4 children each, how many would you expect to you **[5]**

i) At least one boy ii) 1 or 2 girls

c) In certain city 4000 tube lights are installed. If the lamps have average life of 1500 burning hours with standard deviation 100 hours. Assuming normal distribution. How many lamps will fail in first 1400 hours. How many lamps will last beyond 1600 hours. (Given : A(1) = 0.3413) **[5]**

OR

Q5) a) A and B are playing a game of alternating tossing a coin, one who gets head first wins the game. Find the probability of B winning the game if A has start. **[5]**

b) A certain factory turning cotter pins knows that 2% of his product is defective. If he sells cotter pins and guarantees that not more than 5 pins will be defective in a box, find the approximate probability that a box will fail to meet guaranteed quality. **[5]**

c) The number of computer science books borrowed from a library during a particular week is given below. **[5]**

Day	Mon	Tue	Wed	Thurs	Fri	Sat
Number of book borrowed	140	132	160	148	134	150

Test the hypothesis that the number of books borrowed does not depend on the day. Taking 5% of level of significance $\chi^2_{5.005} = 11.07$.

Q6) a) Find the directional derivative of $\phi = x^2 + y^2 + z^2$ at (1, 1, 1) along the vector $\bar{i} + 2\bar{j} + 2\bar{k}$. **[5]**

b) Show that the vector field $\bar{F} = (6xy + z^3)\bar{i} + (3x^2 - z)\bar{j} + (3xz^2 - y)\bar{k}$ is irrotational. Find scalar potential ϕ such that $\bar{F} = \nabla\phi$. **[5]**

c) Find the work done in moving a particle once round the ellipse $\frac{x^2}{25} + \frac{y^2}{16} = 1,\ z = 0$ under the force field. **[5]**

$$\bar{F} = (2x - y + z)\bar{i} + (x + y - z^2)\bar{j} + (3x - 2y + 4z)\bar{k}.$$

OR

Q7) a) Find angle between the surfaces $x^2 + y^2 + z^2 = 9$ and $z = x^2 + y^2 - 3$ at the point (2, –1, 2). **[5]**

b) Prove that (any one). **[5]**

i) $$\nabla^2\left[\nabla \cdot \left(\frac{\bar{r}}{r^2}\right)\right] = \frac{2}{r^4}$$

ii) $$\nabla \times \left[\bar{a} \times (\bar{b} \times \bar{r})\right] = \bar{a} \times \bar{b}$$

c) Evaluate $\iint_s (\nabla \times \bar{F}) \cdot d\bar{s}$ where $\bar{F} = (x^3 - y^3)\bar{i} - xyz\bar{j} + y^3\bar{k}$ and s is surface $x^2 + 4y^2 + z^2 - 2x = 4$ above the plane $x = 0$. **[5]**

Q8) a) Solve $\frac{\partial u}{\partial t} = c^2 \frac{\partial^2 u}{\partial x^2}$ subject to the following conditions: **[8]**

i) u is finite for all t

ii) $u(0, t) = 0 \ \forall t$

iii) $u(l, t) = 0 \ \forall t$

iv) $u(x, 0) = u_0$ (constant) for $0 \le x \le l,$ where l is the length of the bar.

b) A string is stretched and fastened to two points L apart. Motion is started by displaying the string in the form $u = a \sin\left(\frac{\pi x}{l}\right)$ from which it is released at time $t = 0$. Find the displacement $u(x, t)$ from one end. **[7]**

OR

Q9) a) An infinitely long uniform metal plate is enclosed between lines $y = 0$ and $y = L$ for $x > 0$. The temperature is zero along the edges $y = 0$, $y = L$ and at infinity. If the edge $x = 0$ is kept at a constant temperature u_0, find the temperature distribution $u(x, y)$. **[8]**

b) Use Fourier sine transform to solve $\frac{\partial u}{\partial t} = 2\frac{\partial^2 u}{\partial x^2}, \ 0 < x < \infty, t > 0,$ subject to **[7]**

i) $u(0,t) = 0, \forall t$

ii) $u(x,0) = e^{-x}, \ x > 0$

iii) u and $\frac{\partial u}{\partial x} \to 0$ as $n \to \infty$



Total No. of Questions : 8]

SEAT No. :

P602

[Total No. of Pages : 3

[5869]-217

S.E. (Mechanical / Automation & Robotics)

KINEMATICS OF MACHINERY

(202047) (2019 Pattern) (Semester - IV)

Time : 2½ Hours] *[Max. Marks : 70*

Instructions to the candidates:

1) ***Answer Q1 or Q2, Q3 or Q4, Q5 or Q6, Q7 or Q8.***
2) ***Neat diagrams must be drawn wherever necessary.***
3) ***Figures to the right indicates full marks.***
4) ***Use of calculator is allowed.***
5) ***Assume suitable data, if necessary.***

Q1) a) Explain with neat sketch different type of ICR. **[5]**

b) For the mechanism as shown in fig. find the acceleration of point D on link DBC when link O_2B rotates at 30 r/s. Using relative velocity and acceleration method. **[13]**

O_2B = 200mm, BD = 430mm, DC = 170mm, BC = 570mm.

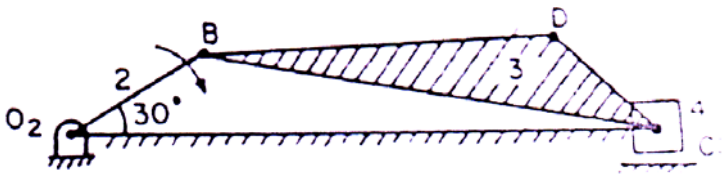

OR

Q2) a) Explain Velocity Image Principle with neat sketch. **[5]**

b) For the configuration shown in the following fig. enumerate and locate all the instantaneous centers of velocities and hence, find the velocity of slider D, if the link OA rotates at 1000 rpm. Link lengths are OQ = 225 mm, QB = 200 mm, AB = 250 mm, OA = 150 mm, AC = 450 mm, CD = 325 mm. Total no. of links are 6. **[13]**

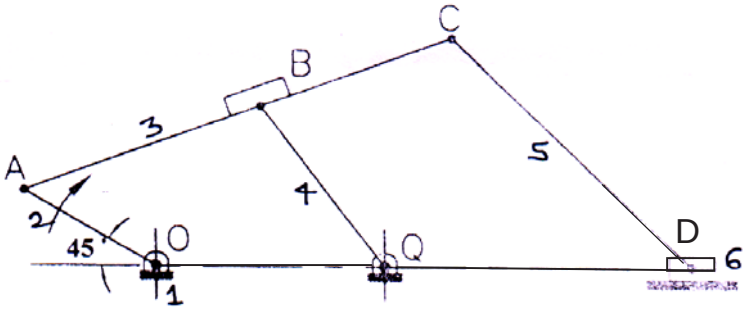

P.T.O.

Q3) a) Explain 3 position relative pole method for synthesis of four bar chain mechanism. **[5]**

b) A four-bar mechanism is to be synthesized by using precision points to generate the function $y = 2x^2 - x$ for the range $1 \leq x \leq 4$. Assuming 30º starting position and 120º finishing position for input link and; 70º starting and 160º finishing position for output link. Find out values of x, y, θ (input angles) and φ (output angles) corresponding to the 3 precision points with Chebyshev spacing. **[12]**

OR

Q4) a) Explain the following terms : **[6]**

i) Dimensional Synthesis

ii) Function generation

iii) Body guidance

b) Determine the chebyshev spacing for function $y = x^{1.3}$ for the range $0 \leq X \leq 3$ where three precision points are required. For these precision points, determine θ_1, θ_2, θ_3 & ϕ_1, ϕ_2, ϕ_3 if $\Delta\theta = 40º$ & $\Delta\phi = 90º$. **[11]**

Q5) a) What is a law of gearing? Explain the importance of law of gearing. **[5]**

b) Two involute gears of 20° pressure angle are in mesh. The number of teeth on pinion is 20 and the gear ratio is 2. If the pitch expressed in module is 5 mm and the pitch line speed is 1.2 m/s, assuming addendum as standard and equal to one module. find : **[13]**

i) The angle turned through by pinion when one pair of teeth is in mesh; and

ii) The maximum velocity of sliding.

OR

Q6) a) State and explain terminology for spur gear with neat sketch. **[6]**

b) The following data relate to a pair of 20° involute gears in mesh: **[12]**

Module = 6 mm, Number of teeth on pinion = 17, Number of teeth on gear = 49; Addenda on pinion and gear wheel = 1 module.

Find :

i) The number of pairs of teeth in contact;

ii) The angle turned through by the pinion and the gear wheel when one pair of teeth is in contact, and

iii) The ratio of sliding to rolling motion when the tip of a tooth on the larger wheel (i) is just making contact, (ii) is just leaving contact with its mating tooth, and (iii) is at the pitch point.

Q7) a) Define the concept of automated production lines with suitable example. **[5]**

b) A cam is to give the following motion to a knife-edged follower : **[12]**

i) Outstroke during 60° of cam rotation;

ii) Dwell for the next 30° of cam rotation:

iii) Return stroke during next 60° of cam rotation, and

iv) Dwell for the remaining 210° of cam rotation.

The stroke of the follower is 40 mm and the minimum radius of the cam is 50 mm. The follower moves with uniform velocity during both the outstroke and return strokes. Draw the profile of the cam when the axis of the follower passes through the axis of the cam shaft.

OR

Q8) a) Short note : Automation and Al's Role in Manufacturing Industry. **[5]**

b) The following data related to a cam profile, in which the follower moves with S.H.M. during the lift and returning it with uniform acceleration and retardation, retardation being half the acceleration. **[12]**

i) Minimum radius of cam, r_b = 30 mm.

ii) Lift of follower, S = 45 mm.

iii) Radius of roller, r = 10 mm.

iv) Offset of follower axis, e =12 mm

v) Angle of ascent, θ_0 = 70° (Nature is S.H.M.).

vi) Outer dwell angle, θ_d = 45°.

vii) Angle of return, θ_r = 120° (uniform acceleration and retardation) Draw the cam profile.

⌘⌘⌘

Total No. of Questions : 08]

SEAT No. :

P603

[Total No. of Pages : 3

[5869]-218
S.E. (Mechanical/Automobile) (Semester IV)
APPLIED THERMODYNAMICS
(2019 Pattern)

Time : 2½ Hours] *[Max. Marks : 70*

Instructions to the candidates:

1) ***Answer Q1 or Q2, Q3 or Q4, Q5 or Q6, Q7 or Q8.***
2) ***Figures to the right indicate full marks***
3) ***Neat diagrams must be drawn whenever necessary.***
4) ***Make suitable assumption whenever necessary.***
5) ***Scientific calculator is allowed.***

Q1) a) What is carburetor? Draw and explain working of simple carburetor. **[8]**

b) Explain the various stages of combustion in CI engine with the help of P-θdiagram **[9]**

OR

Q2) a) Enlist various sensors used in the Electronic Fuel Injection system. Draw and explain D-MPFI system. **[8]**

b) Draw P-θ diagram and explain the different stages of combustion in SI engine. **[9]**

Q3) a) Explain working of Rope Brake type of dynamometer with the help of neat sketch, also write Advantages and Disadvantages. **[9]**

b) The following observations were recorded during a test on 4 stroke single cylinder diesel engine. Bore - 250 mm, Stroke = 350 mm, Mean effective pressure = $0.65M^{pa}$ Brake drum diameter = 1.25m, Net brake load = 45 kg, Mean piston speed = 300 m/min, mf = 2.5 kg/hr, C.V of fuel = 41800 kj/kg. Find:

i) Friction power

ii) Mechanical efficiency

iii) Indicated and Brake thermal efficiency **[9]**

OR

P.T.O.

Q4) a) Define, write units and formula for following terms, **[8]**

i) Indicated power

ii) Brake Fuel specific consumption

iii) Brake Thermal efficiency

iv) Volumetric efficiency

b) In a test of an oil engine under full load condition, the results were obtained:
Brake torque = 327.5 Nm,
Fuel used = 15 kg/hr,
Frictional power = 10 kW, rpm = 1750,
Air supplied = 4.75 kg/min.,
Calorific value of fuel used = 42000 kj/kg,
Volume flow rate of cooling water = 14 lit/min,
Rise in temperature of cooling water = 45° C,
Exhaust gas temperature = 400° C,
Room temperature = 21° C,
Cpw = 4.2 kJ/kg K, Cpg = 1.23 kJ/kg K,
Find ISFC and draw the heat balance sheet on k W basis. **[10]**

Q5) a) Explain Magneto ignition system in details with diagram. **[8]**

b) State the objectives of supercharging of engine. Describe any one type of supercharger with neat sketch. **[9]**

OR

Q6) a) What are the various types of radiators used in cooling system of IC engine? Explain any one type of cooling system of IC engine with neat sketch. **[8]**

b) Explain battery ignition system in detail with neat sketch. **[9]**

Q7) a) Explain with neat sketch multi-stage reciprocating air compressor. And compare rotary compressor with reciprocating compressor. **[9]**

b) A reciprocating compressor has two stages with inlet air going into LP stage at 1 bar, 16° C and at the rate of 12 m3/min. Air is finally delivered at 7 bar and there is perfect intercooling at optimum pressure between the stages. The index for compression is 1.25 and compressor runs at 600 rpm. Neglecting clearance volume, determines intermediate pressure, total volume of each cylinder and total work required. **[9]**

OR

Q8) a) i) Give the classification of compressors? Define FAD and Volumetric Efficiency.

ii) How to improve isothermal efficiency of reciprocating air compressor. **[9]**

b) Two stage single acting air compressor takes in air at 1 bar and 300 K, Air is discharged at 10 bar. The intermediate pressure is ideal and intercooling is perfect. The law of compression is $PV^{1.3} = C$ Rate of discharge is 0.1 kg/sec. find:

i) Power required to drive the compressor

ii) Saving in work compared to single stage

iii) Isothermal efficiency for single and multistage. **[9]**

Take Cp = 1 kJ/kg.K, R = 0.287 KJ/kg.K



Total No. of Questions : 8]

SEAT No. :

P604

[Total No. of Pages : 3

[5869]-219
S.E. (Mechanical & Automobile Engg.)
FLUID MECHANICS
(2019 Pattern) (Semester - IV)

Time : 2½ Hours] *[Max. Marks : 70*

Instructions to the candidates:

1) ***Answer Q.1 or Q.2, Q.3 or Q.4, Q.5 or Q.6, Q.7 or Q.8.***
2) ***Neat diagrams must be drawn wherever necessary.***
3) ***Figures to the right side indicate full marks.***
4) ***Use of electronic pocket calculator allowed.***
5) ***Assume suitable data if necessary.***

Q1) a) Define stream function & velocity potential function. **[4]**

b) Derive an expression for continuity equation in 3 dimensions. **[6]**

c) Find the velocity & acceleration at a point (1, 1, 2) for the following flow field. **[7]**

$$V = -x^2 y\hat{i} - y^2 2\hat{j} + (2xyz + yz^2)\hat{k}$$

OR

Q2) a) Explain path line & stream line. **[4]**

b) Discuss various types of flow with example. **[6]**

c) The velocity potential function ϕ is given as $\phi = -2xy$, **[7]**

i) Determine stream function.

ii) Determine the velocity at (2, 2)

Q3) a) State Bernoulli's theorem & the assumptions made in Bernoulli's equation. **[4]**

b) Derive expression for the pressure drop for a steady laminar flow through circular pipe. **[6]**

c) A 200mm × 100mm venturimeter is provided in vertical pipe carrying water flowing in horizontal direction. A differential mercury manometer connected to the inlet & throut gives a reading of 220mm. Find the velocity of fluid & rate of flow. **[8]**

OR

P.T.O.

Q4) a) Draw neat labelled sketch of shear stress & velocity distribution diagram across a section of pipe. **[4]**

b) Derive Eulers equation for flow along stream line & deduce the Bernoulli's equation from same. **[6]**

c) A 0.2m diameter pipe carries liquid in laminar region. A pitot tube placed in the flow at radial distance 15mm from the axis of pipe indicates velocity of 0.5 m/s. Calculate i) Maximum velocity ii) Mean velocityi ii) Discharge through pipe. **[8]**

Q5) a) Define the lift force & drag force on an object immersed in a fluid. **[4]**

b) Explain the boundary layer separation & discuss the methods to avoid boundary layer separation. **[6]**

c) Syphon of diameter 200mm connects two reservior having difference in elevation of 15m. Total length of syphon is 600m & summit is 4m above water level in upper reservior. If separation takes place at 2.8m water absolute. Find the maximum length of syphon from upper reservior to summit. Take coefficient of friction as 0.004 & atmospheric pressure as 10.3m of water. **[8]**

OR

Q6) a) Define & explain boundary layer thickness. **[4]**

b) Derive Darcy - weishbach equation for calculating loss of head due to friction in pipe. **[6]**

c) A kite has plan area of $0.25m^2$ & is flying in wind of velocity 25kmph. The kite has net weight of 1.2N. When string is inclined at angle of 15° to the vertical , tension in string was found to be 3N. Evaluate coefficient of lift & drag. Take density of air as 1.5 kg/m^3. **[8]**

Q7) a) Explain Froude's Model Law. **[4]**

b) Define with examples : **[4]**

i) Reynolds Number

ii) Froude's Number

c) Using Buckingham's π theorem prove that the discharge over weir is given by **[9]**

$$Q = VL^2\left[\frac{gL}{V}, \frac{H}{L}\right]$$

OR

Q8) a) Explain Reynold's Model Law **[4]**

b) Define with examples. **[4]**

i) Euler's Number

ii) Mach Number

c) The pressure rise 'ΔP' generated by a pump is a function of the impeller diameter 'D', the rotational speed 'N', the fluid density 'ρ', viscosity 'μ' and the rate of discharge Q, show that **[9]**

$$\Delta P = SN^2D^2\phi\left[\frac{Q}{ND^3}, \frac{SND^2}{\mu}\right]$$ using Buckingham's Theorem.

❄ ❄ ❄

Total No. of Questions : 8]

SEAT No. :

P605

[Total No. of Pages : 2

[5869]-220

S.E. (Automobile & Mechanical /Automation & Robotics)

MANUFACTURING PROCESSES

(2019 Pattern) (Semester - IV) (202050)

Time : 2½ Hours] *[Max. Marks : 70*

Instructions to the candidates:

1) ***Answer Q.No.1 or Q.No.2, Q.No.3 or Q.No.4, Q.No.5 or Q.No.6, Q.No.7 or Q.No.8.***
2) ***Neat diagrams must be drawn wherever necessary.***
3) ***Use of electronic pocket calculator is allowed.***
4) ***Figures to the right indicate full marks.***
5) ***Assume suitable data, if necessary.***

Q1) a) Explain any three sheet metal working operations with their working. **[6]**

b) A cup of 60 mm diameter 60 mm and height is to be drawn from 1 mm thick cold rolled steel with tensile strength 410 MPa. The corner radius is 2 mm. Calculate the following **[12]**

i)	Size of blank	ii)	Percentage reduction
iii)	Nmber of draws	iv)	Punch and die radius
v)	Die clearance	vi)	Drawing pressure

OR

Q2) a) Explain combination die with schematic sketch. **[6]**

b) Design a strip layout for manufacturing a steel component as shown in figure. The thickness of component is 1.2 mm & ultimate shear strengh is 220 MPa. The dimension 'a' shown in figure is 20 mm. (all sides are 20 mm). **[12]**

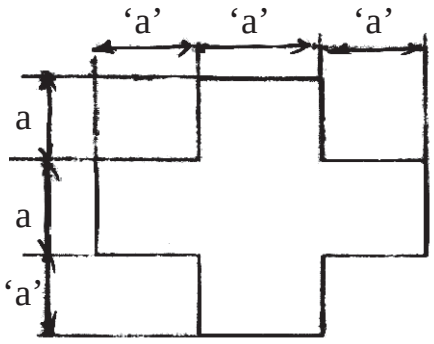

P.T.O.

Q3) a) Explain TIG welding with neat sketch. **[6]**

b) Explain any 3 Welding defects along with remedies. **[6]**

c) Explain Welding Inspection briefly. **[5]**

OR

Q4) a) Discriminate between Brazing and Soldering. **[6]**

b) Explain Carbon Arc Welding neat sketch. **[6]**

c) Discriminate between TIG & MIG Welding. **[5]**

Q5) a) Explain Compression molding polymer processing with sketch. **[6]**

b) Explain Pressure forming polymer processing with sketch. **[6]**

c) Describe Ram type Injection molding with sketch. **[6]**

OR

Q6) a) Explain Vacuum forming in Plastics. **[6]**

b) Compare Thermoplastics and Thermosetting Plastics. **[6]**

c) Discuss Blow molding process with neat sketch and give any two applications of it. **[6]**

Q7) a) Explain Hand lay-up composite manufacturing process. **[6]**

b) Explain Filament winding Composite manufacturing process. **[6]**

c) Discriminate between Ceramic matrix & Metal matrix composite. **[5]**

OR

Q8) a) Compare Spray lay-up & Hand lay-up composite manufacturing process. **[6]**

b) Explain vacuum bag moldig composite manufacturing process. **[6]**

c) Compare Ceramic matrix & Polymer matrix composite. **[5]**



Total No. of Questions : 8]

SEAT No. : ____

P606

[Total No. of Pages : 4

[5869] - 221
S.E. (Mech. / Sandwich)
SOLID MECHANICS
(2019 Patterm) (Semeser - III)

Time : 2½ Hours] ***[Max. Marks : 70***

Instructions to the candidates:

1) ***Answer Q.No.1 or Q. No. 2, Q. No. 3 or Q. No. 4, Q. No. 5 or Q. No. 6, Q. No. 7 or Q. No. 8.***
2) ***Figures to the right indicate full marks.***
3) ***Use Graph Paper for Graphical Solution.***
4) ***Use of electronic pocket calculator is allowed.***
5) ***Assume the suitable data, if necessary.***

Q1) a) A cast iron pipe of internal diameter 450 mm is 15 mm thick and is supported on a span of 8 m. Find the maximum stress in the pipe when it is full of water. Take specific weight of cast iron = 71600 N/m^3 and that of water = 9810 N/m^3. **[9]**

b) A simply supported beam carries a uniformly distributed load of intensity 30 N/mm over the entire span of 1 metre. The cross section of the beam is a T-section having the dimension as shown in figure 1. Calculate the maximum shear stress for the section of the beam. **[9]**

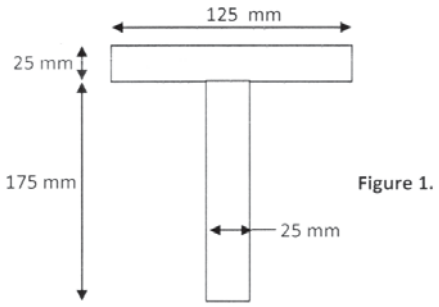

Figure 1.

OR

Q2) a) A horizontal girder of steel having uniform section is 14 meters long and is simply supported at its ends. It carries concentrated loads of 120 kN and 80 kN at two points 3 meters and 4.5 meters from the two ends respectively. I for the section of the girder is 16×10^8 mm^4 and E_s = 210 kN/mm^2. Calculate the deflections of the girder at points under the two loads. Find also the maximum deflection. **[9]**

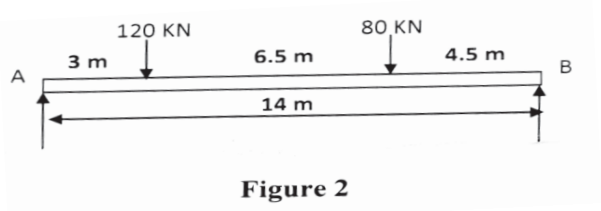

Figure 2

P.T.O.

b) The beam section as shown in figure 3, is subjected to bending moment of 8.75 kNm. Determine **[9]**

i) The force on the top flange

ii) The moment of this force about the neutral axis.

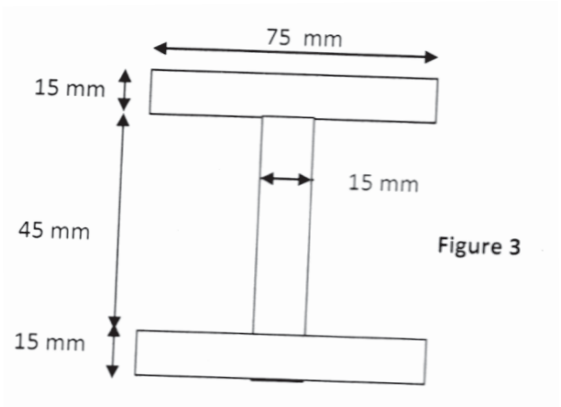

Figure 3

Q3) a) Determine the torque that can be applied to a solid shaft of 20 mm diameter without exceding an allowable shearing stress of 65 N/mm^2. What torque can be applied if the shaft is replaced by a hollow shaft of same sectional area with the inner diameter equal to half its outer diameter? **[9]**

b) A square column of wood is 2.5 m long with pinned ends. Taking a factor of safety of 2.5 in computing Euler critical load and also taking the allowable compressive stress as 12 N/mm^2, find the size of the cross-section, if the column has to safety support,

i) 150 kN

ii) 275 kN. Take E = 1.3 × 10^4 N/mm^2. **[8]**

OR

Q4) a) A hollow shaft 1.60 m long has an outer diameter of 42 mm and is subject to a torque of 900 Nm. If the permissible shear stress is 75 N/mm^2 and the angle of twist shall not exceed 4°, find the largest internal diameter. Take C = 7.7 ×10^4 N/mm^2. **[9]**

b) Find the greatest length of a mild steel rod 25 mm X 25 mm which can be used as a compression member with one end fixed and the other end free to carry a working load of 35 kN. Allow a factor of safety of 4. Take α = 1/7500 and f_c = 320 N/mm^2. **[8]**

Q5) a) A 75 mm diameter solid shaft is supported on end bearing 4 m apart. It carries a pulley weighing. 1.75 KN at its centre. It is subjected to a torque of 1.5 kNm. Ignoring the weight of the weight of the shaft, determine **[9]**

i) Equivalent torque to produce the same maximum shear stress.

ii) The maximum shear stress and

iii) The principal stresses.

b) A steel specimen is subjected to the following principal stresses **[9]**

i) 120 N/mm^2

ii) 60 N/mm^2 tensile and 30 N/mm^2 compressive. If the proportionality limit for the steel specimen is 250 N/mm^2. Find the factor of safety according to

1) The maximum principal stress theory
2) The maximum principal strain theory
3) The maximum shear stress theory and
4) The strain energy theory. Take Poisson's ratio (1/m) = 0.3

OR

Q6) a) A rectangular block of material is subjected to stresses on perpendicular faces as shown in figure 4. Using Mohr's circle of stress, find **[9]**

i) The normal and shear stresses on a plane for which θ = 30°.
ii) The magnitude of the principal stresses and the inclination of the planes on which principal stresses act.

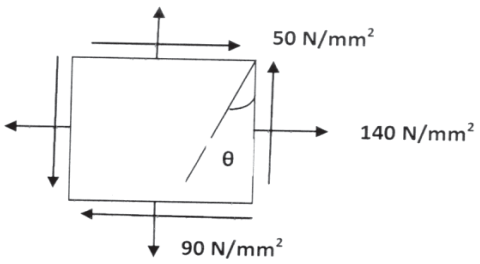

figure 4

b) A bolt is subjected to an axial pull of 8kN and a transverse shear force of 3 kN. Determine the diameter of the bolt required based on **[9]**

i) The maximum principal stress theory.
ii) The maximum shear stress theory.
iii) The maximum strain energy theory.

Take elastic limit in simple tension equal to 270 N/mm^2 and Poisson's ratio = 0.3. Adopt a factor of safety equal to 3.

Q7) a) The wide-flange beam is subjected to the loading shown in figure 5. Determine the principal stress in the beam at point A, which is located at the top of the web. Although it is not very accurate, use the shear formula to determine the shear stress. Show the result on an element located at this point. **[8]**

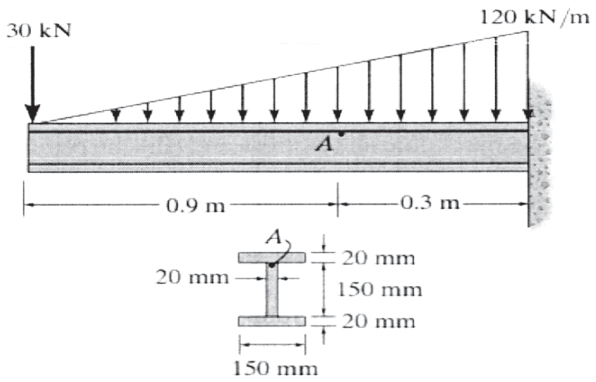

figure 5

b) Determine the principal stress in the beam at point A. **[9]**

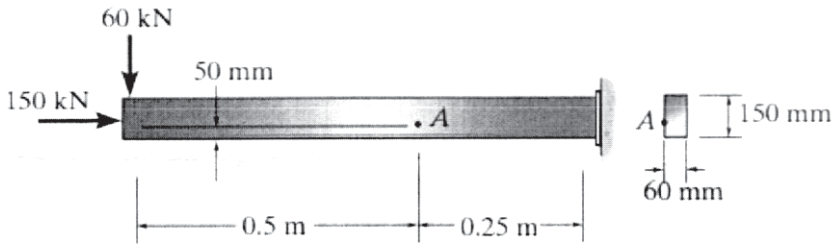

figure 6

OR

Q8) a) The wood beam is subjected to a load of 12 kN. Determine the principal stress at point A and specify the orientation of the element. **[8]**

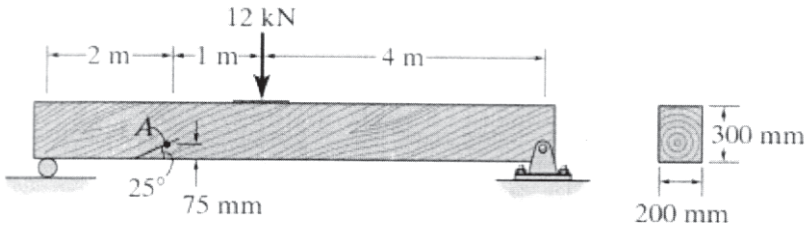

figure 7

b) The T-beam is subjected to the distibuted loading that is applied along its centerline as shown in figure 8. Determine the principal stress at point A and show the results on an elements located at this point. **[9]**

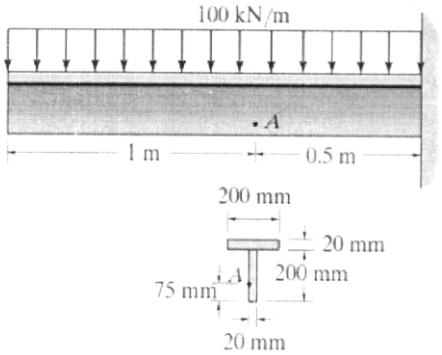

figure 8

Total No. of Questions : 8]

SEAT No. :

P607

[Total No. of Pages : 3

[5869]-228

S.E. (Mechanical Sandwich)

THERMAL ENGINEERING

(2019 Pattern) (Semester - IV) (202061)

Time : 2½ Hours] *[Max. Marks : 70*

Instructions to the candidates:

1) ***Solve Q.1 or Q.2, Q.3 or Q.4, Q.5 or Q.6, Q.7 or Q.8.***
2) ***Figures to the right indicate full marks.***
3) ***Draw the neat sketches wherever necessary.***
4) ***Use of Psychrometric chart is permitted.***
5) ***Use of non-programmable calculator are allowed.***
6) ***Assume suitable data if necessary.***

Q1) a) Define the following terms : **[8]**

i) Dry bulb temperature

ii) Wet bulb temperature

iii) Wet bulb depression

iv) Due point temperature

b) Explain with neat sketch on psychrometric chart, the following processes: cooling and dehumidification, heating and humidification. **[9]**

OR

Q2) a) How the air conditioning systems are classified and explain the summer air conditioning system with neat sketch. **[8]**

b) Atmospheric air with dry bulb temperature of 28 °C and wet bulb temperature of 17 °C is cooled to 15 °C without changing its moisture content. Find **[9]**

i) Original relative humidity

ii) Final relative humidity

iii) Final wet bulb temperature

Q3) a) Differentiate between closed cycle gas turbine and open cycle gas turbine. **[9]**

b) Derive an expression for thermal efficiency of Diesel cycle. **[9]**

OR

P.T.O.

Q4) a) The air standard diesel cycle has a compression ratio of 14. The pressure at the beginning of the compression stroke is 1 bar and the temperature is 300 K. The maximum cycle temperature is 2500 K. Determine the cut-off ratio and the thermal efficiency. **[9]**

b) Compare Air standard cycle, fuel cycle and actual cycle for petrol engine with neat sketch. **[9]**

Q5) a) Explain the supercharging with neat sketch and draw the P-V diagram for supercharged petrol engine. **[8]**

b) What is mean by carburation and explain simple carburetor with neat sketch? **[9]**

OR

Q6) a) What is necessity of cooling the I.C. Engine. Explain air cooling system of engine and what are its advantages and disadvantages? **[8]**

b) What is mean by Governing system and explain all types of governing systems? **[9]**

Q7) a) What are main sources of Pollutants from Petrol engine? **[8]**

b) A gas engine, working on four stroke constant volume cycle, gave the follow results when loaded by friction brake during attest of an hour's duration: **[10]**

Cylinder diameter : 240 mm

Stroke length : 480 mm

Clearance volume : 4450×10^{-6} m^3

Effective circumference of the brake wheel : 3.86 m

Net load on the brake 1260 N at overall speed of 226.7 rpm

Average explosions/min : 77

m.e.p of indicator card : 7.5 bar

Gas used : 13 m^3/hr at 15 °C and 771 mm of hg

Lower calorific value of gas 49350 KJ/m^3 at NTP

Cooling jacket water 660 kg raised to 34.5 °C

Heat lost to exhaust : 8%

Calculate

i) IP

ii) BP

iii) Indicated Thermal Efficiency

iv) Efficiency ratio

v) Draw the heat balance sheet for the engine

OR

Q8) a) Explain Normal combustion and abnormal combustion Phenomena in SI engine. **[9]**

b) Explain stages of combustion in CI engine with P-θ diagram. **[9]**

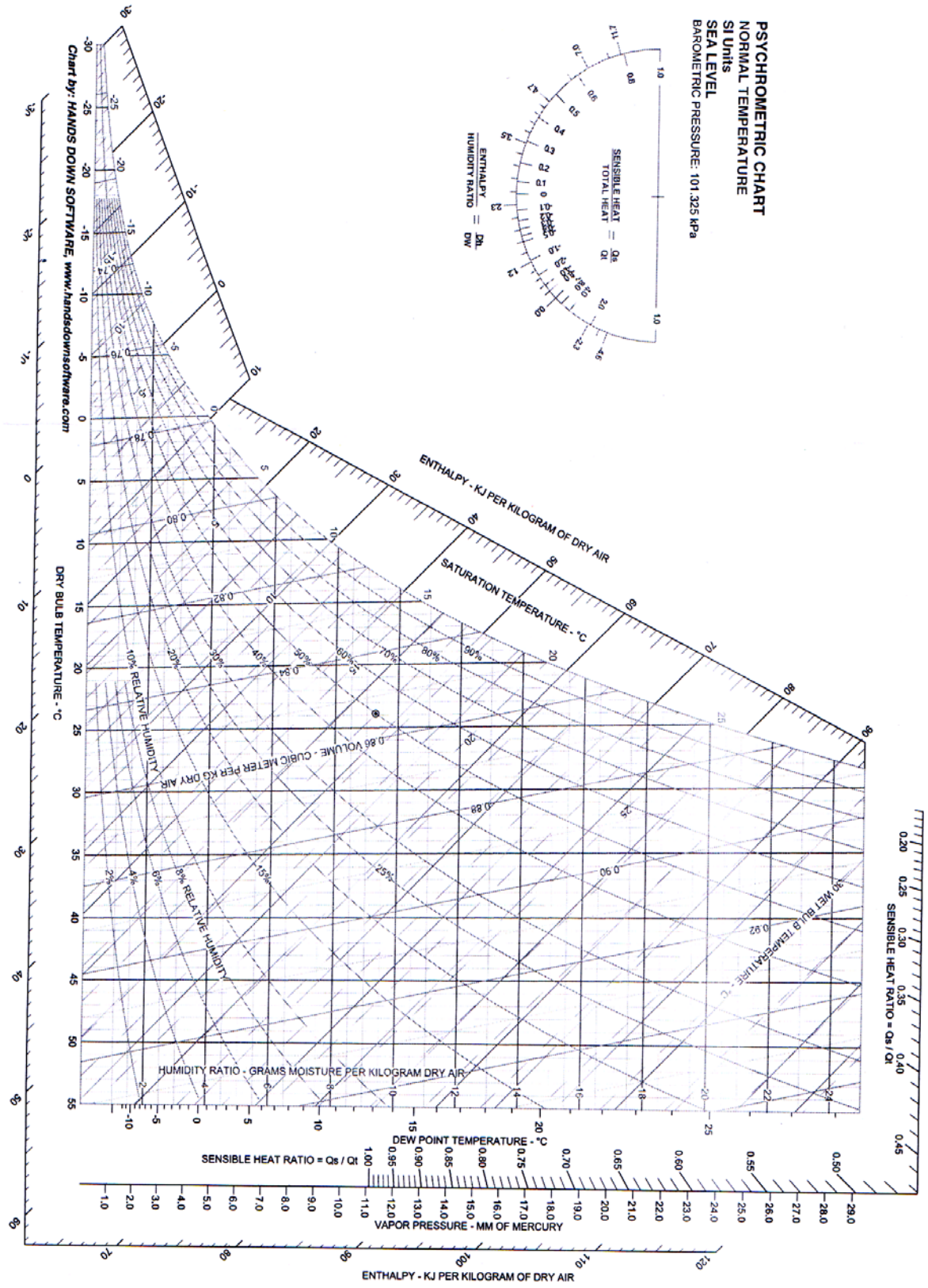

♣ ♣ ♣

Total No. of Questions : 8]

SEAT No. : ____

P608

[Total No. of Pages : 3

[5869]-229
S.E. (Mechanical Sandwich)
FLUID MECHANICS AND MACHINERY
(Semester - IV) (2019 Pattern)

Time : 2.30 Hours] ***[Max. Marks : 70***

Instructions to the candidates:

1) ***Answer Q.1 or Q.2, Q.3 or Q.4, Q.5 or Q.6, Q.7 or Q.8.***
2) ***Neat diagrams must be drawn whenever necessary.***
3) ***Use of logarithmic tables, slide rule, and electronic pocket calculator is allowed.***
4) ***Figures to the right indicate full marks.***
5) ***Assume suitable data, if necessary.***

Q1) a) Explain major and minor losses in the pipe with fig and formulae in detail (with fig and formulae). **[8]**

b) Explain Pipes in series, Pipes in parallel and concept of Equivalent Pipe with fig and formula **[8]**

OR

Q2) a) Prove that, in case of steady laminar flow through a circular pipe average velocity is half of the maximum velocity **[8]**

b) Torque T of a propeller depends on density of liquid p, viscosity of liquid μ, speed N rpm, linear velocity V, diameter of propeller shaft D. Using Buckingham's It Theorem.

Show that: **[8]**

$$T = pN^2D^5\phi\left(\frac{ND}{V}, \frac{pND^2}{\mu}\right)$$

Q3) a) A jet of water of diameter 40 mm moving with a velocity of 30 m/s strikes normally to a flat plate moving at 10m/s Determine (i) the force exerted by the jet on the pate , (ii) power of the jet, (iii) efficiency of the jet and (iv) max efficiency. **[10]**

P.T.O.

b) Prove that the condition for maximum efficiency (V = 2u) for a jet of water strikes at centre of series of curved vane also finds an expression for maximum efficiency. **[8]**

OR

Q4) a) A Pelton wheel is to be designed for the following specifications.

Power = 8421 kW, S.P.

Head = 320 m,

Speed = 700 r.p.m.

$\eta_0 = 0.87$ and

jet diameter is not to exceed one-sixth the wheel diameter (jet ratio = 6). Draw velocity diagram. Determine: (i) Wheel diameter, (ii) The number of jets required, and (iii) Diameter of the jet. (iv) Number of buckets Take $C_V = 0.98$ and speed ratio = 0.45. **[10]**

b) Define Gross Head, Net Head, Jet Ratio, Run Away Speed volumetric efficiency, Hydraulic Efficiency, Mechanical Efficiency, and Overall Efficiency related to Pelton wheel. **[8]**

Q5) a) A Kaplan turbine working under a head of 24 m develops 12000 kW shaft power. The outer diameter of the runner is 3 m and hub diameter is 1.3 m. The guide blade angle at the extreme edge of the runner is 30°. The hydraulic and overall efficiencies of the turbine are 90% and 85% respectively. If the velocity of whirl is zero at outlet, determine: discharge, velocity of flow, speed and runner vane angles at inlet and outlet at the extreme edge of the runner **[10]**

b) Define Draft tube. What is its type? write its function and find out expression for pressure head at inlet of draft tube with fig. **[8]**

OR

Q6) a) A reaction turbine works at 450 r.p.m. under a head of 120 meters. Its diameter at inlet is 120 cm and flow area is 0.4 m2. The angles made by absolute and relative velocities at inlet are 20° and 60° respectively with the tangential velocity. Determine:

i) The Volume flow rate

ii) The power developed and

iii) Hydraulic Efficiency

Assume whirl at outlet to be zero. **[8]**

b) Explain the working principle of turbine which is suitable for low head (Kaplan Turbine) **[6]**

c) Explain the following for hydraulic tubine

i) Hydraulic Efficiency

ii) Mechanical Efficiency **[4]**

Q7) a) Derive the expression for rise in pressure in the impeller of a centrifugal pump **[6]**

b) Find the rise in pressure in the impeller of a centrifugal pump through which water is flowing at the rate 17.28 litre/s. The internal and external diameters of the impeller are 18 cm and 36 cm respectively. Widths of impeller at inlet and outlet are 1.44 cm and 0.72 cm .The pump is running at 1500 r.p.m. The water enters the impeller radially at inlet and impeller vane angle at outlet is 45°. Neglect losses through the impeller **[7]**

c) What is Priming? Explain methods of priming in pump **[5]**

OR

Q8) a) Derive the expression for minimum starting speed of a centrifugal pump. **[7]**

b) The diameters of an impeller of a centrifugal pump at inlet and outlet are 36cm and 72 cm respectively. Determine the minimum starting speed of the pump if it works against head of 30m. **[6]**

c) Explain cavitation and NPSH in pump. **[5]**

❄ ❄ ❄

Total No. of Questions : 8]

SEAT No. : ____

P609

[Total No. of Pages : 2

[5869]-230
S.E. (Mechanical - Sandwich)
MANUFACTURING ENGINEERING
(2019 Pattern) (Semester - IV)

Time : 2½ Hours] ***[Max. Marks : 70***

Instructions to the candidates:

1) ***Answer Q.1 or Q.2, Q.3 or Q.4, Q.5 or Q.6, Q.7 or Q.8.***
2) ***Neat diagrams must be drawn wherever necessary.***
3) ***Figures to the right indicate full marks.***
4) ***Assume suitable data, if necessary and mention it clearly.***

Q1) a) Explain the designation of coated electrode. **[5]**

b) Illustrate with neat sketches common types of welded joints. Also discuss various welding positions. **[6]**

c) State three types of resistance welding. Sketch a spot welding equipment set-up. Write equation for heat generated in resistance welding. **[6]**

OR

Q2) a) Explain arc welding set-up in detail. Also discuss DCEP and DCEN. **[5]**

b) Explain GMAW (Gas Metal Arc Welding) process with neat sketch. **[6]**

c) Explain the different types of flames used in oxyacetylene welding. Give application of each flame. **[6]**

Q3) a) What are the types of chips formed during metal cutting? Which factors are responsible for formation of different types chips. **[6]**

b) Explain tailstock set-over method of taper turning. Calculate the amount of tail stock set-over for turning a taper on a job (2/3)rd of its length from one end. Diameter of the large end is 100 mm and that of smaller end is 80 mm. Total length of the job is 360 mm. **[6]**

c) State the desirable properties of cutting tool material. State commonly used tool materials. State the factors affecting tool life. **[6]**

OR

Q4) a) Explain any three methods of taper turning with neat sketches. **[6]**

b) The Taylor's tool-life equation for machining C-40 steel with HSS cutting

P.T.O.

tool is given by $VT^n = C$, where n and C are constant. If Cutting velocity and Tool Life is:

V, (m/min)	25	35
T (Min)	90	20

Calculate : (i) n and C, (ii) Recommend the cutting speed for a desired tool life of 60 mins. **[6]**

c) What is basic principle of metal cutting? Give specification of Centre lathe. **[6]**

Q5) a) Calculate the time required to produce 20 holes on a MS plate of 40 mm thickness with the following data: **[5]**

i) Drill diameter = 30 mm,
ii) Cutting speed = 25m/min,
iii) Feed = 0.1 mm/rev.,
iv) Overrun and approach = 0.3 x drill diameter

b) Explain following Milling operations with suitable sketch: **[6]**
i) Face Milling ii) T-slot Milling iii) Gang Milling

c) Compare Gang drilling and Multi-spindle drilling machines. **[6]**

OR

Q6) a) Explain working of radial drilling machine. **[5]**

b) Sketch a twist drill geometry and discuss various elements of it. **[6]**

c) Index for 87 divisions by compound indexing using following Brown and Sharpe Plate. **[6]**
Plate 1 - 15, 16, 17, 18, 19, 20 holes
Plate 2 - 21, 23, 27, 29, 31, 33 holes
Plate 3 - 37, 39, 41, 43, 47, 49 holes

Q7) a) Explain the terms Grit, Grade and structure of Grinding Wheel. **[6]**

b) Describe various types of surface grinders with simple sketches. **[6]**

c) Draw a neat sketch of broach and name its different parts. **[6]**

OR

Q8) a) Explain the followings in relation to grinding wheel **[6]**
i) Loading ii) Glazing & iii) Dressing

b) Classify broaching machines. Discuss advantages and disadvantages of broaching. **[6]**

c) Write a note on Lapping process. **[6]**

❄ ❄ ❄

Total No. of Questions : 9]

SEAT No. : ____

P610

[Total No. of Pages : 4

[5869] - 231
S.E. (Electrical)
ENGINEERING MATHEMATICS - III
(2019 Pattern) (Semester - III) (207006)

Time : 2½ Hours] ***[Max. Marks : 70***

Instructions to the candidates:

1) ***Attempt Q.1, Q.2 or Q.3, Q.4 or Q 5, Q.6 or Q.7, Q.8 or Q.9.***
2) ***Question No. 1 is compulsory.***
3) ***Neat diagrams must be drawn wherever necessary.***
4) ***Figures to the right indicate full marks.***
5) ***Use of electronic pocket calculator is allowed.***
6) ***Assume suitable data, if necessary.***

Q1) Write the correct option. **[10]**

a) If $f(k) = k4^k$, $k \geq 0$, then Z transform of $\{kf(k)\}$ is **[2]**

i) $\dfrac{4z}{(z-4)^2}; |z| > 4$ ii) $\dfrac{(z-4)^2}{4z}; |z| > 4$

iii) $\dfrac{4z}{(z+4)^2}; |z| > 4$ iv) $\dfrac{(z-4)^2}{z}; |z| > 4$

b) Mean of Binomial probability distribution is **[1]**

i) np ii) nq

iii) npq iv) pq

c) Probability that a leap year is selected at random will contain 53 sundays is **[2]**

i) $\dfrac{2}{7}$ ii) $\dfrac{1}{7}$

iii) $\dfrac{3}{7}$ iv) $\dfrac{6}{7}$

d) The divergence of $\overline{F} = x^2 yi + y^2 j + z^2 xk$ at (1, 2, 1) is **[2]**

i) 5 ii) 8

iii) 10 iv) 12

P.T.O.

e) Analytic function $f(z)$ with constant modulus is **[1]**

i) function of x ii) function of y

iii) function of x and y iv) constant

f) The poles of $f(z)=\dfrac{z+2}{(z-1)(z+3)}$ are **[2]**

i) –1, 3 ii) 1,–3

iii) 1, 3 iv) –1, –3

Q2) a) Find Fourier sine transform of, $f(x)=\begin{cases} x, & 0\le x\le 1 \\ 0 & x>1 \end{cases}$. **[4]**

b) Attempt any one: **[5]**

i) Find z - transform of $f(k) = k^2 3^k$, $k \ge 0$.

ii) Find inverse z- transform of F(z) given,

$$\mathrm{F}(z)=\frac{z^2}{\left(z-\frac{1}{2}\right)\left(z-\frac{1}{3}\right)}, |z|>\frac{1}{2}.$$

c) Solve, $f(k + 2) + 6f(k + 1) + 9f(k) = 2^k$, if $f(0) = f(1) = 0$. **[6]**

OR

Q3) a) Attempt any one: **[4]**

i) Find z-transform of $f(\mathrm{k})=\dfrac{2^k}{k}, k\ge 1$

ii) Find inverse z-transform of $F(z)=\dfrac{z}{(z-1)(z-2)}, |z|>2$.

b) Find Fourier integral representation of the function $f(x)=\begin{cases} 1, & |x|<1 \\ 0, & |x|>1 \end{cases}$

and hence evaluate, $\int_0^\infty \dfrac{\sin\lambda.\cos\lambda x}{\lambda}\,d\lambda.$ **[5]**

c) Using inverse Fourier cosine transform, find $f(x)$ for

$$\mathrm{F_C}(\lambda)=\begin{cases} \pi/2\,(1-\lambda), & 0<\lambda<1 \\ 0, & \lambda\ge 1 \end{cases}$$

Hence show that, $\int_0^\infty \dfrac{\sin^2 z}{z^2}\,dz=\dfrac{\pi}{2}$. **[6]**

Q4) a) The first four moments of a distribution about the value 5 are 2, 20, 40 and 50. Calculate the first four moments about the mean. **[5]**

b) Calculate the coefficient of correlation from the following data.
$n = 10$, $\Sigma x = 40$, $\Sigma x^2 = 190$, $\Sigma y^2 = 200$, $\Sigma xy = 150$, $\Sigma y = 40$. **[5]**

c) The probability of a man hitting a target is $\frac{1}{3}$. If he fires 5 times, what is the probability of his hitting the target at least thrice? **[5]**

OR

Q5) a) If the two lines of regression are $9x + y - \lambda = 0$ and $4x + y - \mu = 0$ and the means of x and y are 2 and –3 respectively. Find the values of λ and μ and the coefficient of correlation between x and y. **[5]**

b) In a Poisson distribution, if $P(r = 1) = 2\ P(r = 2)$, find $P(r = 3)$. **[5]**

c) In a normal distribution, 31% of the items are under 45 and 8% are over 64. Find the mean and standard deviation of the distribution. Given that (z = 0.496, A = 0.19 and when z = 1.405, A = 0.42). **[5]**

Q6) a) Find the directional derivative of $\phi = xy^2 + yz^3$ at P(1, –1, 1) towards the point Q (2, 1, –1). **[5]**

b) Show that the vector field

$\bar{F} = (2xz^3 + 6y)\hat{i} + (6x - 2yz)\hat{j} + (3x^2z^2 - y^2)\hat{k}$ is irrotational. Also find corresponding scalar potential function ϕ such that $\bar{F} = \nabla\phi$. **[5]**

c) Evaluate $\int_C \bar{F}.d\bar{r}$ where $\bar{F} = x^2\hat{i} + (x - y)\hat{j} + (y + z)\hat{k}$ and C is the curve $x = t$, $y = t^2$, $z = t^3$ from $t = 0$ to $t = 1$. **[5]**

OR

Q7) a) Find the directional derivative of $\phi = x^2 - y^2 + 2z^2$ at the point (1, 2, 3) in the direction of $4\hat{i} - 2\hat{j} + \hat{k}$. **[5]**

b) Show that (Any one) **[5]**

i) $\nabla \cdot \left(r \nabla \left(\frac{1}{r^5} \right) \right) = \frac{15}{r^6}$

ii) $\nabla \left(\frac{\bar{a} \cdot \bar{r}}{r} \right) = \frac{\bar{a}}{r} - \frac{(\bar{a} \cdot \bar{r})\bar{r}}{r^3}$

c) Using Green's theorem evaluate $\oint_C \bar{F}.d\bar{r}$ where $\bar{F} = (2x + y)\hat{i} + (5x - y)\hat{j}$ and C is circle $x^2 + y^2 = 16$, $z = 0$. **[5]**

Q8) a) If $u = 3x^2 - 3y^2 + 2y$ find its harmonic conjugate and hence determine F(z) in terms of z. **[5]**

b) Evaluate : $\oint_C \frac{4-3z}{z(z-1)(z-2)}dz$ where C is circle with $|z| = 3/2$. **[5]**

c) Find the bilinear transformation which maps the point 1, i, –1 from z-plane onto the points i, 0, $-i$ of w - plane. **[5]**

OR

Q9) a) If $u-v = x^3 + 3x^2y - 3xy^2 - y^3$ find an analytic function $f(z) = u + iv$ in terms of z. **[5]**

b) Evaluate $\oint_C \frac{2z^2+z+5}{\left(z-3/2\right)^2}$ where C is $\frac{x^2}{4}+\frac{y^2}{9}=1$. **[5]**

c) Find the map of the strip $x > 0$; $0 < y < 4$ under the transformation $w = iz + 2$. **[5]**



Total No. of Questions : 8]

SEAT No. :

P979

[Total No. of Pages : 2

[5869]-232
S.E. (Electrical Engineering)
POWER GENERATION TECHNOLOGY
(2019 Pattern) (Semester - III)

Time : 2½ Hours] ***[Max. Marks : 70***

Instructions to the candidates:

1) ***Solve Q1 or Q2, Q3 or Q4, Q5 or Q6, Q7 or Q8***
2) ***Figures to the right indicate full marks.***
3) ***Neat diagrams must be drawn wherever necessary.***
4) ***Assume suitable additional data, if necessary.***
5) ***Use of non-programmable calculator is allowed.***

Q1) a) Why surge tanks are used in hydro power plant? Write their function. **[6]**

b) Describe the factors to be considered while selecting hydro power plant. **[4]**

c) Explain hydrograph and flow duration curve with example. **[8]**

OR

Q2) a) Defferentiate between Francis, Kaplan and Pelton wheel turbine. **[4]**

b) How are Hydroelectric power plants classified? **[6]**

c) Draw the schematic layout of a hydroelectric power plant and elaborate functions of each component and it's operation. **[8]**

Q3) a) Describe the historical development of wind turbine on global level. **[3]**

b) Differentiate between horizontal axis and vertical axis wind turbine. **[6]**

c) Explain working of vertical type wind turbine with neat diagram. **[8]**

OR

Q4) a) Write in brief advantages and disadvantages of wind energy. **[3]**

b) Define cut in, cut out and rated speed as applied in wind energy system with suitable diagram. **[6]**

c) Derive the relation for the power in wind and describe the Environmental Impacts of Wind Turbines. **[8]**

P.T.O.

Q5) a) Explain impact of temperature and insolation on I-V curves of PV cells. **[4]**

b) Explain the Shading impacts on I-V curves of PV cells. **[6]**

c) With the help of diagram explain the concept of solar thermal power plant. **[8]**

OR

Q6) a) What is a solar collector? State different types of solar collector indicating their temperature range. **[4]**

b) Define the terms in solar energy system. **[6]**

i) Solar constant

ii) Cloudy index

iii) Concentration ratio

c) Explain the working of PV cell and Simplest Equivalent Circuit for a Photovoltaic cell. **[8]**

Q7) a) Write a short note on Ocean thermal energy conversion. **[4]**

b) Explain grid connected renewable systems and their requipments. **[6]**

c) Describe the following sytesm in renewable energy system. **[7]**

i) Stand alone

ii) Hybrid stand alone

OR

Q8) a) Write a short note on Geothermal energy. **[4]**

b) Describe the fuel cells. How are they used for energy storage requirements? **[6]**

c) Explain the process Biomass energy conversion. **[7]**



Total No. of Questions : 8]

SEAT No. :

P611

[Total No. of Pages : 2

[5869]-233
S.E. (Electrical)
MATERIAL SCIENCE
(2019 Pattern) (Semester - III)

Time : 2½ Hours] *[Max. Marks : 70*

Instructions to the candidates:

1) ***Answer Q.1 or Q.2, Q.3 or Q.4, Q.5 or Q.6, Q.7 or Q.8.***
2) ***Figures to the right indicate full marks.***
3) ***Assume Suitable data if necessary.***
4) ***Neat diagrams must be drawn wherever necessary.***

Q1) a) Explain the properties of solid insulating material. **[6]**

b) Give the property of following **[6]**

i) PVC

ii) Bakelite

c) Explain the property of ceramic material. **[5]**

OR

Q2) a) State the property of insulating material used for transformer. **[6]**

b) State the requirement of material used for rotating machines. **[5]**

c) Give the property of line insulator and explain anyone. **[6]**

Q3) a) Explain the terms diamagnetism, paramagnetism, ferromagnetism and antiferromagnetism and ferrimagnetism with the reference to magnetic dipoles of the atom. **[6]**

b) Define: **[6]**

i) Permeability

ii) Magnetic susceptibility

iii) Magnetic Moment

iv) Magnetization

c) Define with units **[6]**

i) Magnetic Dipole moment

ii) Magnetization

iii) Magnetic Susceptibility

OR

P.T.O.

Q4) a) Differentiate between hard and soft magnetic material. **[6]**

b) Derive curie-weiss law for magnetic material. **[6]**

c) Explain the behaviour of ferromagnetic material under curie temperature. **[6]**

Q5) a) Write short notes on **[6]**

i) Thermocouple

ii) Thermal Bimetal

b) What do you mean by an alloy, hence write property of kanthal and constantan. **[6]**

c) Discuss briefly energy band in conductor and insulator. **[5]**

OR

Q6) a) State properties of material used for solders. **[6]**

b) Which material is suitable for lamp filament, give its suitable properties. **[5]**

c) Write down properties and application of **[6]**

i) Silver and its alloy

ii) Copper and its alloy

Q7) a) Give any two application of any two nano - molecular machines. **[6]**

b) Explain nano wires **[6]**

c) Explain carbon nano tubes **[6]**

OR

Q8) a) Describe molecular machines with neat diagrams. **[6]**

b) Describe single electron transistor with neat diagram. **[6]**

c) Write down application of carbon nano tubes and BN nano tubes. **[6]**

Total No. of Questions : 8]

SEAT No. :

P612

[Total No. of Pages : 2

[5869]-234
S.E. (Electrical)
ANALOG & DIGITAL ELECTRONICS
(2019 Pattern) (Semester - III) (203143)

Time : 2½ Hours] ***[Max. Marks : 70***

Instructions to the candidates :

1) ***Solve Q1 or Q2, Q3 or Q4, Q5 or Q6, Q7 or Q8.***
2) ***Neat diagrams must be drawn wherever necessary.***
3) ***Figures to the right indicates full marks.***
4) ***Use of Calculator is allowed.***
5) ***Assume suitable data if necessary.***

Q1) a) What is semiconductor memory? Enlist advantages of it. **[6]**

b) Write a short note on sequential memories. **[6]**

c) Explain how memories are classified based on physical characteristics. Explain in brief. **[6]**

OR

Q2) a) Draw and explain block diagram of memory devices. **[6]**

b) Write a short note on Read Only Memory (ROM). **[6]**

c) What is DRAM? What are its advantages and disadvantages? **[6]**

Q3) a) Draw pin diagram of Op-Amp IC. (IC 741). Also explain function of each pin. **[5]**

b) Explain how Op-Amp can be work as a peak detector? **[5]**

c) Explain how sine wave is generated with Op-Amp. **[8]**

OR

Q4) a) Explain working of Op-Amp as a Zero Crossing Detector with I/P and O/P waveform. **[5]**

b) Draw circuit of Op-Amp as V - I converter. Also explain its working. **[5]**

c) Explain how square wave is generated with Op-Amp. **[8]**

P.T.O.

Q5) a) Draw and explain frequency response of low pass filter. **[5]**

b) What is voltage regulator? Write any two applications of voltage regulator. **[5]**

c) With the help of neat diagram explain working of IC 555 as a Astable Multivibrator. **[7]**

OR

Q6) a) Draw and explain frequency response of high pass filter. **[5]**

b) Explain functioning of LM 317 as a voltage regulator. **[5]**

c) With the help of neat diagram explain working of IC 555 as a Mono-stable Multivibrator. **[7]**

Q7) a) With the help of neat diagram explain working of single phase HWR with R load. **[5]**

b) Give comparison between single phase HWR and single phase FWR (min 5 points). **[5]**

c) Draw neat diagram of 3 phase FWR with R load. Also explain its working with waveforms. **[7]**

OR

Q8) a) With the help of neat diagram explain working of single phase HWR with R-L load. **[5]**

b) Derive the expression for PIV for single phase FWR. **[5]**

c) Define following terms - (i) Form factor (ii) Ripple factor (iii) TUF. **[7]**

Total No. of Questions : 8]

SEAT No. :

P613

[Total No. of Pages : 3

[5869]-235

S.E. (Electrical)

ELECTRICAL MEASUREMENT & INSTRUMENTATION

(Semester - III) (2019 Pattern) (203144)

Time : 2½ Hours] *[Max. Marks : 70*

Instructions to the candidates:

1) ***Solve Q1 or Q2, Q3 or Q4, Q5 or Q6, Q7 or Q8.***
2) ***Figures to the right side indicate full marks.***
3) ***Neat diagrams must be drawn wherever necessary.***
4) ***Assume suitable additional data, if necessary.***
5) ***Use of non-programmable calculator is allowed.***

Q1) a) When two wattmeter method is used for measurement of power in a three phase balanced circuit, comment upon the readings of the two wattmeter under following conditions : **[6]**

i) When the power factor is unity.

ii) When the power factor is zero.

iii) When the power factor is 0.5 lagging.

b) Two wattmeter's connected to measure the power supplied to a 3 phase, 500 V circuit indicate the total input to be 10 kW. The power factor is 0.3 lagging. Find the reading on each wattmeter. **[6]**

c) With suitable circuit diagram and phasor diagram explain one wattmeter method for measurement of reactive power. **[6]**

OR

Q2) a) Three equal impedances each consisting of (R + L) series elements are connected in star across 400 Volts, 50 Hz, 3 phase balanced supply. The power of this circuit is measured by 2 wattmeter method. The two wattmeters read 3 kW and 1 kW respectively. Find the value of R and L in each phase. **[6]**

b) Explain the various types of errors that take place in wattmeter. **[6]**

c) While performing a load test on a 3 phase wound rotor induction motor by two wattmeter method, the readings obtained on two wattmeter's were +14.2 kW and 6.1 kW and line voltage was 440V. **[6]**

P.T.O.

Calculate :

i) True power drawn by the motor.

ii) Power factor.

iii) Line current.

Q3) a) A 230V, single phase energy meter is connected to a constant load of 6A, unity power factor for 8 hours. If the impulses made during this are 35328. What is meter constant in imp/kWh. Calculate the power factor of load if number of impulses made by LED are 31795 when operating at 230V, 9A for 6 hours. **[6]**

b) Explain any three errors in induction type energy meter in detail. Also state the method of compensation for these errors. **[6]**

c) What is mean by creeping in an energy meter and how is it prevented? **[5]**

OR

Q4) a) A 230V, 50 Hz, Single phase energy meter has a constant of 2000 imp/kWh while supplying a non-inductive load of 4.4 A at normal voltage the meter takes 180sec for 100 impulses. Calculate the percentage error of instrument and state whether meter is running fast or slow. **[6]**

b) With suitable block diagram explain working of electronic energy meter. **[6]**

c) With suitable diagram explain the calibration of single phase Energy Meter. **[5]**

Q5) a) Define transducer and state detailed classification of transducers. **[6]**

b) With suitable diagram explain working of LVDT. **[6]**

c) Explain the working of Pirani Gauge for measurement of pressure. **[6]**

OR

Q6) a) With suitable diagram explain construction and working of McLeod Gauge. **[6]**

b) With suitable diagram explain working of resistive transducers. **[6]**

c) Draw and explain characteristics of LVDT. State advantages and disadvantages of LVDT. **[6]**

Q7) a) Give the detailed classification of strain gauge and explain wire strain gauge. **[6]**

b) Explain Nucleonic method for level measurement with suitable diagram. **[6]**

c) Explain level measurement by mechanical method. **[5]**

OR

Q8) a) Describe the construction of foil type strain gauges and explain their advantages over wire wound strain gauge. **[6]**

b) Explain Ultrasonic method for level measurement with suitable diagram. **[6]**

c) Explain any one electrical method for measurement of level. **[5]**



Total No. of Questions : 8]

SEAT No. : ____

P614

[Total No. of Pages : 3

[5869]-236

S.E. (Electrical)

POWER SYSTEMS - I

(2019 Pattern) (Semester - IV)

Time : 2½ Hours] ***[Max. Marks : 70***

Instructions to the candidates:

1) ***Answer Q1 or Q2, Q3 or Q4, Q5 or Q6, Q7 or Q8.***
2) ***Neat diagrams must be drawn wherever necessary.***
3) ***Figures to the right side indicate full marks.***
4) ***Assume suitable data if necessary.***

Q1) a) Explain what are factors to be consider for selecetion of span length hence state factors affecting sag of transmission line. **[5]**

b) Describe advantages and limitations of following insulators. **[6]**

i) Pin insulator.

ii) Shackle insulators.

iii) Strain insulators.

c) Each conductor of 3 phase line is suspended by 4 suspension insulators. If voltage distribution across second and third insulators from top are 13.6 kV and 17.8 kV respectively. Find voltage between the conductors.**[6]**

OR

Q2) a) State following statements are True of False. **[5]**

i) Guard rings are used to reduce the earth capacitance in suspension insulators.

ii) Bushings used for large capacity of transformers are generally solid porcelain bushings.

iii) Slant sag can be calculated by dividing vertical sag by cos θ.

iv) In overhead transmission lines, tension at any point on conductor will act horizontally.

v) In suspension insulator string, disc nearest to the conductor is highly stressed.

b) A transmission line has a span of 220 m between level supports. The conductor has cross sectional area of 2.5 cm^2. The tension in the conductor is 2000 kg. If the weight of the conductor is 2 kg/m and wind pressure is 2.05 kg/m calculate vertical sag. **[6]**

c) A 3 phase 80 kV transmission line is supported by 3 suspension insulators. If the ratio of shunt capacitance to self-capacitance is 0.68 Determine.**[6]**

i) Voltage distribution across each unit.

ii) String efficiency.

P.T.O.

Q3) a) Write a short note on. **[6]**

i) Skin effect.

ii) Proximity effect.

b) Derive an expression for the inductance of three phase overhead transmission line when conductors are unsymmetrical spaced but transposed. **[6]**

c) A three phase transmission line has its conductors at the corner of equilateral triangle with side of 3 meter. The diameter of each conductor is 1.6 centimetre. Find inductance per phase per kilometre of line. **[6]**

OR

Q4) a) Derive an expression for flux linkages due to signle current carrying conductor. **[6]**

b) Explain the concept of GMD and GMR for inductance calculation. **[6]**

c) What is meant by transposition of conductors in an overhead line? Why it is essential? How it is carried out? **[6]**

Q5) a) Derive an expression for capacitance per kilometre of single phase overhead line having distance 'D' beteween the conductors and 'r' is the radius of each conductor. **[6]**

b) Explain the concept of self GMD or GMR for capacitance calculation.**[5]**

c) Calculate the capacitance of 100 kilometre long three phase, 50 Hz transmission line consisting of three conductors, each of 2 centimetre diameter and spaced 2.5 meter at the corner of an equilateral triangle.**[6]**

OR

Q6) a) Derive an expression for the capacitance to neutral of a three phase line with equilateral spacing. **[6]**

b) A single phase transmission line has two parallel conductors 3 meter apart, radius of each conductor is 1 centimetre. Calculate the capacitance of line per kilometre. **[5]**

c) Define term electric potential. Derive an expression for electric potential for single charged conductor. **[6]**

Q7) a) Derive the expression for ABCD constants of medium transmission line considering nominal 'π' model of the line. **[6]**

b) Calculate ABCD constants for three phase 50 Hz transmission line with following line parameters. **[6]**

Use Nominal 'T' method.

R=24 Ω, L=0.192H C=1.28*10^{-6}F G=0

c) State performance parameters of transmission line hence explain how ABCD constants are useful for determining these parameters. **[6]**

OR

Q8) a) Define generalised circuit constants of transmission line, write general relationship between sending end and receiving end quantities hence state properties of transmission lines from ABCD constants. **[6]**

b) An overhead 3-phase short transmission line delivers 4.5 MW at 22kV with 0.78 p.f. lagging at receiving end. The resistance & reactance of each conductor is 5 Ω & 6 Ω respectively. Determine: Sending end voltage, sending end power factor and percentage regulation. **[6]**

c) Draw neat circuit diagram and phasor diagram of following transmission line models. **[6]**

i) Medium transmission line Nominal 'T' model.

ii) Medium transmission line Nominal 'π' model.



Total No. of Questions : 8]

SEAT No. : ____

P615

[Total No. of Pages : 3

[5869]-237
S.E. (Electrical Engineering)
Electrical Machines - I
(Semester - IV) (2019 Pattern)

Time : 2 ½ Hours] ***[Max. Marks : 70***

Instructions to the candidates:

1) ***Solve Q.1 or Q.2, Q.3 or Q.4, Q.5 or Q.6, Q.7 or Q.8.***
2) ***Figures to the right indicate full marks.***
3) ***Neat diagrams must be drawn wherever necessary.***
4) ***Assume suitable data, if necessary.***
5) ***Use of non-programmable calculator is allowed.***

Q1) a) State two features each of LAP winding and WAVE winding for DC machine. **[4]**

b) Draw the diagram showing constructional details of a DC machine, clearly mark all parts, State the details of any two parts (name of part, material used for it ,its function) **[6]**

c) With suitable diagrams explain armature reaction in DC machine. Clearly elaborate the demagnetising and cross magnetising effect with suitable diagrams. **[8]**

OR

Q2) a) Derive the torque equation of DC motor with usual notations. **[4]**

b) A 6pole DC motor with wave connected armature has 87 slots with 6 conductors per slot.The flux per pole is 20 milliweber and armature resistance is 0.13 Ohm. Calculate the speed when motor runs on 240 volt supply taking armature current of 80 Ampere. Also find the torque developed by motor in Newton meter. **[6]**

c) Draw the connection diagram of shunt, series DC motors. State their current & voltage distribution equations. **[8]**

P.T.O.

Q3) a) State any one application of- (i) DC shunt (ii) Series & (iii) Cumulative compound motor. **[3]**

b) Sketch & explain the Torque- Armature current characteristics of (i) DC shunt motor & (ii) Series motor. **[6]**

c) A 250 V DC Shunt motor takes a current of 6 Ampere and runs at 1200 rpm. The armature resistance is 0.05 Ohm and shunt filed resistance is 250 Ohm. Determine the speed of motor when it is loaded and taking a current of 31 Ampere. **[8]**

OR

Q4) a) What is meant by reactance voltage in case of commutation in DC machine? **[3]**

b) Draw the circuit diagram & explain the speed control of DC shunt motor by flux control also draw the nature of graph (Field current Vs. Speed). **[6]**

c) Draw the connection diagram of 4 point starter used for DC shunt motor & explain the function of (i) Hold on coil & (ii) Over load coil. **[8]**

Q5) a) Draw the power flow diagram of 3-ph Induction motor. **[4]**

b) A 6 pole, 3 phase induction motor is connected to 400 volt, 50 Hz ac supply. **[6]**

Calculate :

i) the speed of rotating magnetic field of the motor

ii) speed of motor at 3% slip

iii) the rotor emf frequency at 3% slip

c) A 12 pole, 3phase, 50 Hz slip ring induction motor has rotor resistance of 1 Ohm per phase and stand still reactance of 3 Ohm per phase. At stand still condition, the rotor induced emf is 100 volt across the slip-rings.

Calculate the rotor current per phase and rotor power factor when -

i) slip-rings are short circuited

ii) when external resistance of 3 Ohm/phase is added in the rotor circuit **[8]**

OR

Q6) a) Derive the condition for maximum torque under running of 3 phase induction motors with usual notations. **[4]**

b) With suitable diagram explain constructional details of 3 phase squirrel cage induction motor. **[6]**

c) The input to 3 phase, 6 pole, 50 Hz, induction motor is 47 kWatt at certain load. The stator losses are 1.5 kWatt and mechanical losses are 1kWatt. Determine the HP output power of motor when it runs at 970 rpm. (Take 1HP = 746 watt) **[8]**

Q7) a) State the necessity of starter for 3 phase induction motor. **[3]**

b) Why 3 phase induction is also called as generalised transformer? State clearly the similarities between the two. **[6]**

c) With suitable circuit diagram explain no load and blocked rotor test on 3 phase induction motor. Also write respective formulae involved in calculation part for determining the respective parameters. **[8]**

OR

Q8) a) Obtain the approximate equivalent circuit diagrams of 3-ph induction motor step by step. Also draw the phasor diagram of 3 phase induction motor. **[7]**

b) Using data from No load & Blocked rotor test on 3-ph induction motor: Draw the circle diagram & write the procedure to find full load slip, locate the points for slip = 0, 1 **[10]**

❄ ❄ ❄

Total No. of Questions : 8]

SEAT No. :

P616

[Total No. of Pages : 3

[5869]-238
S.E. (Electrical Engineering)
NETWORK ANALYSIS
(2019 Pattern) (Semester - IV)

Time : 2½ Hours] *[Max. Marks : 70*

Instructions to the candidates:

1) ***Answer Q.1 or Q.2, Q.3 or Q.4, Q.5 or Q.6, Q.7 or Q.8.***
2) ***Neat diagrams must be drawn wherever necessary.***
3) ***Figures to the right indicate full marks.***
4) ***Use of calculator is allowed.***
5) ***Assume suitable data, if necessary.***

Q1) a) In the circuit shown in fig. no. 1 initially switch is kept open for long time. At t = 0, switch K is closed. Obtain expression for current at t > 0. Find the value of the current at t = 0.25 sec. What will be the current in circuit in one time constant period. **[7]**

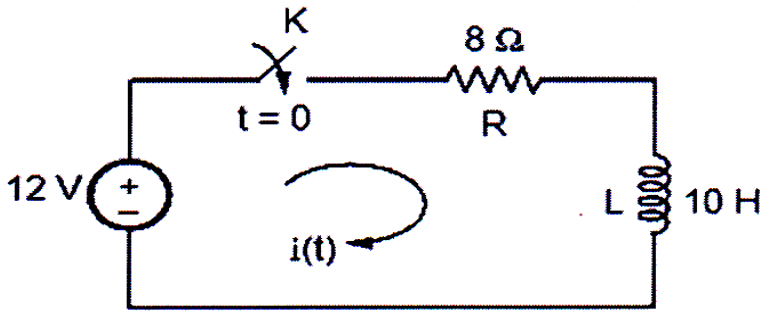

Fig. No. 1

b) Explain the behaviour of R, L and C elements for transients. Mention the representation at the instant of switching. **[5]**

c) Obtain the expression for voltage across capacitor in series RC circuit connected to a. d. c. voltage V for t > 0. Assume initial charge across capacitor is zero. **[5]**

OR

P.T.O.

Q2) a) What is time constant? Explain time constant in case of series R-L and series R-C circuit. **[7]**

b) A series R-L-C circuit shown in fig. no. 2 is excited by DC voltage source. Find current i(t) using conventional method. The switch is closed at t = 0 **[10]**

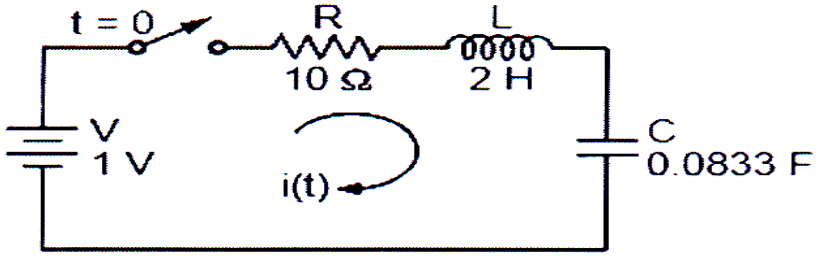

Fig. No. 2

Q3) a) State and prove initial and final value theorem. **[6]**

b) Find the Laplace transform of the function. **[6]**

f(t) = t for 0 < t < 1

= 0 for t > 1.

c) State any six properties of Laplace Transform. **[6]**

OR

Q4) a) Derive the relation between unit step function and unit ramp function. **[6]**

b) Find the Laplace transform of sin ωt. **[6]**

c) Find i(t), by using convolution integral : **[6]**

$$F(s) = \frac{1}{s^2 + 9s + 18}$$

Q5) a) Express hybrid parameters in terms of transmission line parameters. **[9]**

b) Find Z parameters of the network shown in figure no. 3 **[8]**

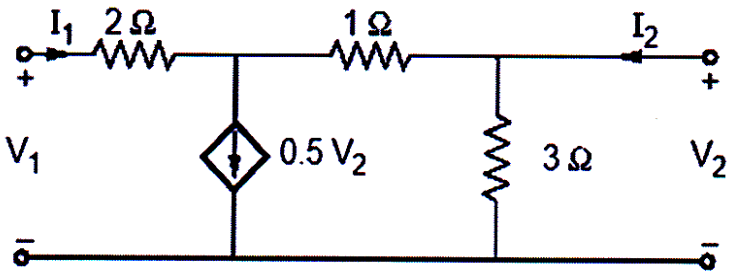

Fig. No. 3

OR

Q6) a) What is high pass filter? Derive the expression for the cut-off frequency of prototype low pass filter in terms of L and C. **[9]**

b) Design a prototype high pass filter sections if design impedance R_0 = 600 ohm and cut-off frequency f_c = 1000 Hz. **[8]**

Q7) a) State and explain all possible network functions of one port network. **[9]**

b) Determine the driving point impedance for the network shown in fig. No.4 **[9]**

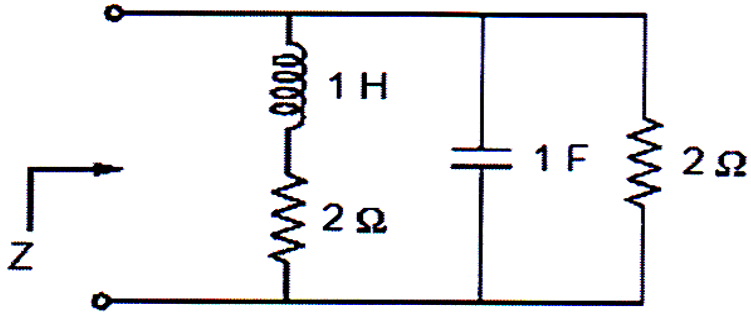

Fig. No. 4

OR

Q8) a) What is pole-zero plot? Explain with suitable example. **[9]**

b) Obtain the pole zero plot in the s-plane of the driving point impedance function for the network shown in fig. no. 5 **[9]**

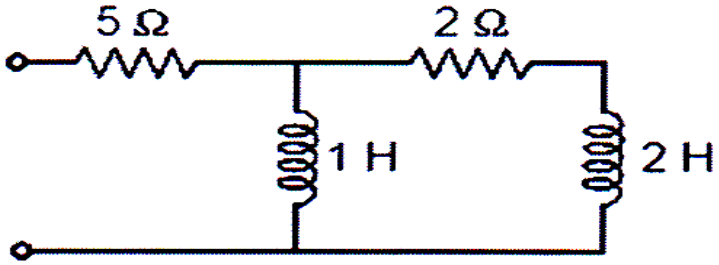

Fig. No. 5

❄ ❄ ❄

Total No. of Questions : 8]

SEAT No. :

P617

[Total No. of Pages : 5

[5869]-239
S.E. (Electrical Engineering)
NUMERICAL METHODS AND COMPUTER PROGRAMMING
(2019 Pattern) (Semester - IV) (203148)

Time : 2½ Hours] *[Max. Marks : 70*

Instructions to the candidates:

1) ***Answer Q.1 or Q.2, Q.3 or Q.4, Q.5 or Q.6, Q.7 or Q.8.***
2) ***Neat diagrams must be drawn whenever necessary.***
3) ***Figures to the right side indicate full marks.***
4) ***Assume suitable data if necessary.***

Q1) a) The total load of the power system is not constant but varies thoughout the day and reaches a different peak value from one day to another. It follows a particular hourly load cycle over a day. There will be different discreate load levels at each period as shown in the following figure. From the same diagram, the time in hours versus active power consumption by load (MW) data is tabulated. What will be the power consumed by the load when the time in hours will be 3 hrs? Use Newton's forward interpolation method. **[6]**

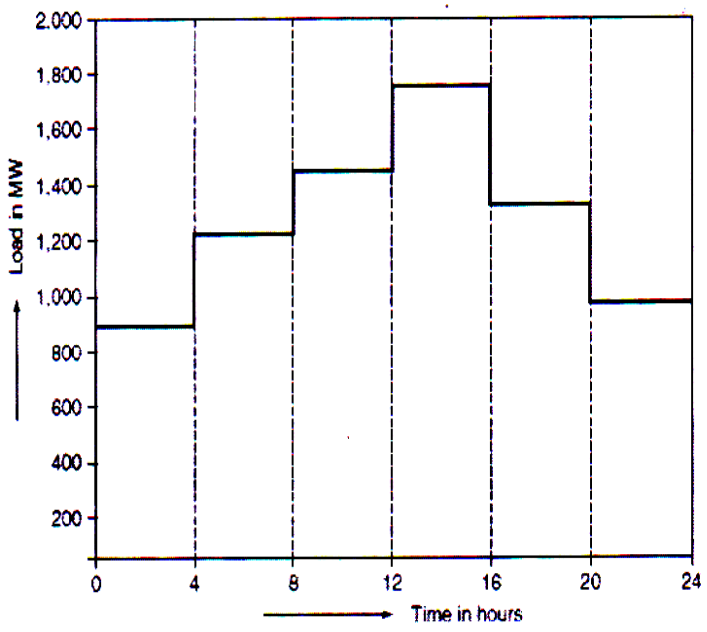

P.T.O.

Time in hours	0	4	8	12	16	20
active power consumption by load (MW)	900	1200	1450	1700	1300	1000

b) Construct a divided difference table from the following data. **[6]**

x	0.2	0.3	0.7	0.9	1.0
$f(x)$	1.32	2.43	–1.5	6.15	–0.06

Hence find the value of $f(x)$ when $x = 0.4$.

c) Derive Lagrange's interpolation formula for unequally data spacing. **[6]**

OR

Q2) a) In the Electrical Machines laboratory, while performing the experiment of speed control of a DC shunt motor utilizing the armature control method, the armature voltage V_a and accompanying speed N in RPM were measured. The data is as shown in the observation table below.**[6]**

Armature voltage V_a	60	100	150	200
Speed N in RPM	379	655	936	1356

Find the value of the speed N in RPM corresponding to the armature voltage $V_a = 120V$. Use Lagrange's interpolation method.

b) The day-wise total solar radiation (in MJ/m^2-day) is collected in the month of May which is required for experimentation. Use the Sterling interpolation method to find solar radiation corresponding to 6th day. **[6]**

Day	1	3	5	7	9
total solar radiation (in MJ/m^2-day)	14.59	18.82	26.00	29.35	26.88

c) Construct the backward difference table for the following data. **[6]**

x	2	4	6	8	10
$f(x)$	101	97	111	120	125

Hence find the value of $f(x)$ when $x = 9$ by using Newton's backward interpolation method.

Q3) a) Evaluate the integral using the trapezoidal rule. Take $h = 0.5$, $k = 0.5$ **[6]**

$$z = \int_0^1 \int_0^1 e^{(x+y)} dx dy$$

b) Find the first and second-order derivatives of the function $f(x)$ at $x = 2$ from the given data : **[6]**

x	2	4	6	8	10
$f(x)$	3.375	7.00	13.525	25	38.889

c) Derive the formula for dy/dx and d^2y/dx^2 at $x = x_n$ using Newton's backward difference interpolation formula. **[5]**

OR

Q4) a) Evaluate the integral using Simpson's one-third rule. Take step size as 0.2. **[6]**

$$z = \int_0^1 xe^{(x)} dx$$

b) Find the first and second-order derivatives of the function $f(x)$ at $x = 20$ from the given data : **[6]**

x	12	14	16	18	20
$f(x)$	5.789	10.478	14.663	17.143	22.745

c) Derive the formula for dy/dx and d^2y/dx^2 at $x = x_0$ using Newton's forward difference interpolation formula. **[5]**

Q5) a) Find the A^{-1} by using Gauss Jordan method. **[6]**

$$A = \begin{bmatrix} 3 & 2 & 4 \\ 2 & 1 & 1 \\ 1 & 3 & 5 \end{bmatrix}$$

b) Solve the following set of linear simultaneous equation using the Gauss Jacobi method. Solve up to six interations. **[6]**

$$x_1 + 2x_2 - x_3 = 3$$

$$x_1 - x_2 + 3x_3 = 1$$

$$2x_1 - x_2 + 2x_3 = 2$$

c) Explain the Gauss Elimination method used for the solution of the linear simultaneous equation. (Problem is not expected. Just write in detail steps). **[6]**

OR

Q6) a) The following system of equations was generated by applying mesh current law to the circuit. Use the Gauss Elimination method to find the current in the circuit. **[6]**

$$-2I_1 + I_2 - I_3 = 8$$

$$I_1 - 3I_2 + I_3 = 8$$

$$3I_1 + I_2 - 2I_3 = 0$$

b) Solve the following set of the linear simultaneous equation using the Gauss Seidel method. Solve up to six interations. **[6]**

$$5x_1 + 2x_2 + x_3 = 12$$

$$x_1 - 4x_2 + 2x_3 = 15$$

$$2x_1 + 2x_2 + 5x_3 = 20$$

c) Explain the Gauss Jordan method used for the solution of the linear simultaneous equation. (Problem is not expected. Just write in detail steps). **[6]**

Q7) a) For the differential eq., $\frac{dy}{dx} = -x^2 y$ with the value $y(0) = 1$, calculate $y(0.2)$ by Taylor's series method. Take h = 0.1. Consider the terms up to fourth derivative. **[6]**

b) Solve the following ODE using Runge-Kutta fourth order method at $x = 0.2, 0.4$.

$$\frac{dy}{dx} = \frac{y - x^2}{y^2 + x}$$

With the value $y(0) = 2$. **[6]**

c) Derive the expression for the solution of ODE using Euler's method. **[5]**

OR

Q8) a) Use Euler's method to find the value of $y(1)$ from the following ordinary differential equation. **[6]**

$$\frac{dy}{dx} = -x^2 + y$$

With the value $y(0) = 2$. Take the step size as 0.2.

b) Use the Runge-Kutta method to solve the following second-order ODE with $x = 0.4$. Correct to four decimal places. **[6]**

$$y'' = xy'^3 - y^2$$

The initial conditions given are $x = 0$, $y = 1.5$, $y' = 0$

c) Derive the expression for the solution of ODE using Taylor's series method. **[5]**

❄ ❄ ❄

Total No. of Questions : 8]

SEAT No. :

P618

[Total No. of Pages : 2

[5869]-240

S.E. (Electrical)

FUNDAMENTAL OF MICROCONTROLLER & APPLICATIONS

(2019 Pattern) (203149) (Semester - IV)

Time : 2½ Hours] ***[Max. Marks : 70***

Instructions to the candidates:

1) ***Solve Q1 or Q2, Q3 or Q4, Q5 or Q6, Q7 or Q8.***
2) ***Neat diagrams must be drawn whenever necessary.***
3) ***Figures to the right indicates full marks.***
4) ***Assume suitable data, if necessary.***

Q1) a) Write a short note on C Data types for 8051 microcontroller. **[5]**

b) Write a program in C to configure Port 1 as input port and Port pin P2.0 as input pin. **[5]**

c) Draw the TCON and TMOD register and explain use of individual bits of TMOD register in detail. **[8]**

OR

Q2) a) Explain the function of bit TF0 in TCON register and write a program in C language to start timer 0. **[5]**

b) Write a program in C language to copy the contents of Port 2 to Port 1.**[5]**

c) Write a program in C language to generate a square wave form on pin 5 of port 1. The frequency of the waveform is 125 Hz. Use timer 1 in mode 1. Assume crystal frequency = 11.0592 MHz. **[8]**

Q3) a) Write a program in C language to enable hardware interrupts INT0 and INT1. **[5]**

b) Write down the steps to program ADC 0809. **[5]**

c) Write a short note on interrupt structure of 8051. **[7]**

OR

P.T.O.

Q4) a) Draw the IE register and explain the functions of bits EA, ET0 and EX0. **[5]**

b) Write down the steps in executing on an interrupt. **[5]**

c) Draw and explain interfacing diagram of ADC with 8051. **[7]**

Q5) a) Write down the steps to be followed to receive a data serially using 8051 microcontroller. **[5]**

b) Write down a short note on interfacing of a GSM module with 8051 microcontroller. **[5]**

c) Write a program to transfer a character "P" serially at baud rate of 9600, Use serial port in Mode 1. Crystal frequency is 11.0592 MHz. **[8]**

OR

Q6) a) Draw the SCON register and explain use of individual bits of the register in detail. **[5]**

b) Write down the steps to be followed to transfer a data serially using 8051 microcontroller. **[5]**

c) Program the 8051 in C to receive bytes of data serially and put them in P1. Set the baud rate at 4800, 8-bit data, and I stop bit. **[8]**

Q7) a) With a neat block diagram explain AC voltage measurement using 8051 microcontroller. **[7]**

b) Draw an interfacing diagram of stepper motor with 8051. Assuming the motor is controlled through most significant 4 bits of port 1. Write a program in C language to run the stepper motor continuously in anticlockwise direction. Assume suitable step sequence. **[10]**

OR

Q8) a) Explain the function of an electromechanical relay and draw an interfacing diagram of relay with microcontroller 8051 with suitable driver circuit. **[7]**

b) Draw and explain interfacing of LED in common anode and common cathode configurations. Write a program in C language for blinking display of a LED connected to port pin P1.0. Use a suitable delay. **[10]**



Total No. of Questions : 9]

SEAT No. : ____

P619

[Total No. of Pages : 5

[5869]-241
S.E. (Electronics/E&TC)
ENGINEERING MATHEMATICS - III
(2019 Pattern) (207005) (Semester - III)

Time : 2½ Hours] ***[Max. Marks : 70***

Instructions to the candidates:

1) ***Q. 1 is compulsory.***
2) ***Attempt Q2 or Q3, Q4 or Q5, Q6 or Q7, Q8 or Q9.***
3) ***Neat diagrams must be drawn wherever necessary.***
4) ***Figures to the right indicate full marks.***
5) ***Use of electronic pocket calculator is allowed.***
6) ***Assume suitable data, if necessary.***
7) ***Write numerical calculations correct upto four decimal places.***

Q1) Write the correct option for the following multiple choice questions:

i) Given $\nabla y_3 = -8, \nabla^2 y_3 = -15, \nabla^3 y_3 = -18$ and **[2]**

x	0	1	2	3
y	4	8	15	7

then $\frac{dy}{dx}$ *at* = 3 is given by

a) $\frac{-15}{2}$ b) $\frac{-43}{2}$

c) $\frac{-13}{2}$ d) –21

ii) If $f(z) = u + iv$ is analytic function and $V = \frac{-y}{x^2 + y^2}$ then $\frac{\partial u}{\partial x}$ is _____ **[2]**

a) $\frac{x^2 - y^2}{\left(x^2 + y^2\right)^2}$ b) $\frac{y^2 - x^2}{\left(x^2 + y^2\right)^2}$

c) $\frac{x^2 - y^2}{x^2 + y^2}$ d) $\frac{y^2 - x^2}{x^2 + y^2}$

P.T.O.

iii) By Gauss-Divergence theorem $\iint (\bar{r}\, r).\hat{n}\, ds$ is equal to **[2]**

a) $\iiint_v \frac{1}{r^2} dv$ b) $4\iiint_v r\, dv$

c) $\iiint_v \frac{1}{r^4} dv$ d) 0

iv) If a vector field is $\bar{F} = \left(x^2 y\right)\bar{i} + xyz\,\bar{j} + z^2 y\bar{k}$ then (ur) $\bar{F}$ at (1,1, 2) is **[2]**

a) $5\bar{i} + \bar{j}$ b) $3\bar{i} + \bar{j} + \bar{k}$

c) $3\bar{i} + \bar{k}$ d) $3\bar{i} + \bar{j}$

v) For simple pole z_o of $f(z)$, residue r at the pole $z = z_o$ is calculated from **[1]**

a) $\lim_{z \to Zo} \frac{d}{dz} f(z)$ b) $\lim_{z \to Zo} f(z)$

c) $\lim_{x \to zo} \frac{f(z)}{z - zo}$ d) $\lim_{z \to Zo} (z - z_o) f(z)$

vi) If Δ is the forward difference operator then Ef(x) is equal to _____ **[1]**

a) $f\left(x + \frac{h}{2}\right) - f\left(x - \frac{h}{2}\right)$ b) $f(x+h) - f(x)$

c) $f(x+h)$ d) $f\left(x + \frac{h}{2}\right) + f\left(x - \frac{h}{2}\right)$

Q2) a) In a certain experiment the values of x and y are found as follows **[5]**

x	0	5	10	15	20
y	7	11	14	18	24

Find the value of y at $x = 8$ using Newton's forward difference formula.

b) Evaluate $\int_0^3 \frac{dx}{1+x}$ with 7 ordinates by using Simpson's $\frac{3}{8}^{th}$ rule. **[5]**

c) Use Euler's method to solve $\frac{dy}{dx} = 1 + xy, y(0) = 1$ and tabulate y for $x = 0$ to $x = 0.3$. Take h = 0.1. **[5]**

OR

Q3) a) Apply Lagrange's interpolation formula to find $f(x)$ from the following data. **[5]**

x	0	1	4	5
y	0	36	24	40

b) A function $f(x)$ is described by the following data at equally spaced intervals. **[5]**

x	0	0.1	0.2	0.3	0.4	0.5	0.6	0.7	0.8	0.9	1
$f(x)$	93	87	68	55	42	37	35	39	48	53	51

Using Trapezoidal rule, evaluate $\int_0^1 f(x)\,dx$.

c) Using Runge - Kutta method of fourth order solve $\frac{dy}{dx} = xy,\ y(1) = 2$ at x =1.2 with h = 0.2. **[5]**

Q4) a) Fine the directional derivative of $\varphi = xy^2 + yz^3$ at (2, –1, 1) along the line $2(x-2) = (y+1) = (z-1)$. **[5]**

b) Show that $\overline{F} = f(r)\overline{r}$ is irratational Find $f(r)$ such that $\overline{F}$ is solenoidal. **[5]**

c) If $\overline{r} = t^2\overline{i} + t\,\overline{j} - 2t^3\overline{k}$ then evaluate $\int_1^2 \overline{r} \times \frac{d^2\overline{r}}{dt^2}\,dt$. **[5]**

OR

Q5) a) Find the directional derivative of $\varphi = xy^2 + 2xy + zx$ at the point (2, –1, 1) in the direction $2\overline{i} + \overline{j} + 3\overline{k}$. **[5]**

b) Find the constant a and b so that the surface $ax^2 + 2byz = (a+4)x$ will be orthogonal to the surface $4x^2y + z^3 = 4$ at (1, –1, 2). **[5]**

c) Prove that $\nabla.\left[r\nabla\left(\frac{1}{r^n}\right)\right] = \frac{n(n-2)}{r^{n+1}}$. **[5]**

Q6) a) Apply Green's Theorem to evaluate: $\int_c [\sin y\,dx + x(1+\cos y)dy]$

where C is the ellipse $\frac{x^2}{16}+\frac{y^2}{25}=1,\ z=0$. **[5]**

b) Using Gauss - Divergence Theorem, evaluate:

$\int_S\int xz^2dydz+\left(x^2y-z^2\right)dzdx+\left(2xy+y^2z\right)dxdy$ where S is the surface enclosing a region bounded by hemisphere $x^2+y^2+z^2=4$ above the xoy-plane. **[5]**

c) Using stokes theorem, evaluate : $\int_C \left(xy^2dx+ydy+z^2xdz\right)$ for the surface of rectangular lamina bounded by $x = 0$, $y = 0$, $x = 1$ $y = 2$, $z = 0$. **[5]**

OR

Q7) a) Find work done in moving a particle along $x = \cos\theta$, $y = \sin\theta$, $z = \theta$ from $\theta=\frac{\pi}{4}$ to $\theta=\frac{\pi}{2}$ under a field of force given by $\overline{F} = -3\sin^2\theta\cos\theta\,\overline{i}+\left(2\sin\theta-3\sin^3\theta\right)\overline{j}+\sin 2\theta\,\overline{k}$. **[5]**

b) Using Gauss - Divergence Theorem, evaluate $\iint_S \overline{F}\text{o}\hat{n}\,ds$

where $\overline{F}=x\overline{i}+y\,\overline{j}+z^2\overline{k}$ over the cylindrical region bounded by $x^2+y^2 = 4$, $Z = 0$, $Z = 2$. **[5]**

c) Using stoke's Theorem, evaluate : $\int_C (4ydx+2zdy+6ydz)$

where C is the curve of intersection of $x^2+y^2+z^2=6z$ and $z=x+3$. **[5]**

Q8) a) If V = $3x^2y - y^3$, find u such that $f(z) = u + iv$ is analytic. Express $f(z)$ in terms of z. **[5]**

b) Use Cauchy's integral formula to evaluate $\oint_C \frac{z^2+1}{z-2} dz$ where C is the circle $|z-2| = 1$. **[5]**

c) Find the bilinear transformation which maps the points –1, 0, 1 from z-plane into the points 0, i, 3i of the W-plane. **[5]**

OR

Q9) a) Show that the analytic function $f(z)$ with constant modulus is constant. **[5]**

b) Use residue theorem to evaluate $\oint \frac{z+2}{z^2+1} dz$ where $|z-i| = \frac{1}{2}$. **[5]**

c) Find the map of straight line $y = x$ under the transformation $W = \frac{z-1}{z+1}$. **[5]**

Total No. of Questions : 8]

SEAT No. : ____

P620

[Total No. of Pages : 2

[5869]-242

S.E. (Electronics & Telecommunication)

ELECTRONIC CIRCUITS

(2019 Pattern) (Semester - III)

Time : 2½ Hours] ***[Max. Marks : 70***

Instructions to the candidates:

1) ***Answer Q.1 or Q.2, Q.3 or Q.4, Q.5 or Q.6, Q.7 or Q.8.***
2) ***Figures to the right indicate full marks.***
3) ***Neat diagrams must be drawn whenever necessary.***
4) ***Make suitable assumptions whenever necesary.***

Q1) a) Draw the block diagram of a regulated dc power supply and explain the function of each block in it. **[6]**

b) With the help of a block diagram explain the concept of SMPS. **[6]**

c) Design an adjustable voltage regulator using LM317 for output voltage 1.25V to 15V and draw necessary connection diagrams. Assume R1=240Ω, ladj=100uA. **[6]**

OR

Q2) a) With the help of a neat diagram explain the operation of an adjustable voltage regulator using IC LM 317. **[6]**

b) Compare linear and switch mode power supply **[6]**

c) Explain the concept of current boosting with necessary diagram. **[6]**

Q3) a) An emitter biased Dual input balanced output differential amplifier has the following specifications:

V_{CC}= ±12 V, R_{C1}=R_{C2}=3.7kΩ and R_E=4.2kΩ,
β=100 & V_{BE}=0.7 V. Calculate:

i) Voltage Gain (Ad)

ii) Input Resistance (Ri)

iii) Output Resistance (Ro) **[6]**

b) Define the following characteristics of OP-AMP

i) input bias current

ii) Slew rate

iii) CMRR **[6]**

c) Explain Current mirror circuit with neat diagram. **[5]**

OR

P.T.O.

Q4) a) Draw a block diagram of the op-amp and explain in detail. **[6]**

b) Find the Q point for a Dual input Balanced output differentail amplifier with RC=RE=65Kohm. Supply voltage used is ±15V, VBE=0.7V. **[6]**

c) Compare ideal & practical parameters of an Op-amp. **[5]**

Q5) a) Draw and inverting summing amplifier with three inputs and derive expression for its output voltage$V_O = -(V_a + V_b + V_c)$. **[6]**

b) Draw a circuit diagram of three op-amp Instrumentation amplifiers and write its output equation. **[6]**

c) Design and inverting Schmitt Trigger circuit whose V_{UT} and V_{LT} are ±5V. Draw input and output waveforms. Assume op-amp saturates at ±13.5V. **[6]**

OR

Q6) a) Design a practical integrator with input signal of 2Vpp and cut off frequency of 2.5KHz for DC voltage gain of 10. **[6]**

b) Explain in detail the working of square wave generators with a neat circuit diagram. draw waveform of output voltage and capacitor voltage. **[6]**

c) Explain the operation of a precision full wave rectifier with necessary waveforms. **[6]**

Q7) a) Draw block diagram and explain any one application of IC PLL 565 in detail. **[6]**

b) Draw circuit diagram and explain D/A converter with binary weighted resistors and give output voltage equation V_O=? **[6]**

c) With neat circuit diagram explain V to I converter. **[5]**

OR

Q8) a) For PLL IC 565 define and give expression of free running frequency, lock range and capture range. **[6]**

b) Design a PLL circuit using 565 IC to get free running frequency 4.5KHz, lock range 2 KHz and capture range 100 Hz. Assume supply voltage of ± 10V. **[6]**

c) With neat circuit diagram explain I to V converter. **[5]**

❖ ❖ ❖

Total No. of Questions : 8]

SEAT No. :

P621

[Total No. of Pages : 2

[5869]-243
S.E. (E & Tc / Electronics & Computer)
DIGITAL CIRCUITS
(2019 Pattern) (Semester - III)

Time : 2½ Hours] *[Max. Marks : 70*

Instructions to the candidates :

1) ***Answer Q.1 or Q.2, Q.3 or Q.4, Q.5 or Q.6, Q.7 or Q.8.***
2) ***Neat diagrams must be drawn wherever necessary.***
3) ***Figures to the right indicates full marks.***

Q1) a) Write a note on a 4-bit parallel binary adder. **[7]**

b) Implement the following Boolean function using a 3:8 decoder and external gates. **[5]**

$$f(A,B,C) = \Sigma m(2, 4, 5, 7)$$

c) Implement the following function using 8 : 1 multiplexer **[5]**

$$f(A,B,C) = \Sigma m(2, 4, 5, 7, 10, 14)$$

OR

Q2) a) Draw the logic diagram of full-adder and its truth table. **[7]**

b) Implement a full-adder using Demultiplexer. **[5]**

c) Implement the given logic function using a 4 : 1 multiplexer. **[5]**

$$f(A,B,C) = \Sigma m(0, 2, 4, 6)$$

Q3) a) Design a 3-Bit synchronous counter using JK FF. **[8]**

b) With the neat diagram, explain the working operation of 4-bit SISO. **[5]**

c) Explain S-R flip-flop using NOR gates. **[5]**

OR

Q4) a) Design a sequence generator using T FFs. **[8]**

$$0 \rightarrow 1 \rightarrow 4 \rightarrow 7 \rightarrow 2$$

b) Explain the types of shift register. **[5]**

c) Explain with diagram the working of D type Flip-flop. Give its truth table. **[5]**

P.T.O.

Q5) a) Design the clocked sequential circuit for the state diagram using T flip flop. **[9]**

b) Draw ASM chart for the circuit that has control input C, clock and outputs x,y,z. **[8]**

i) If C=1 on every rising edge of the clock code on output x,y and z changes from:

$000 \rightarrow 010 \rightarrow 100 \rightarrow 110 \rightarrow 000$ and repeats.

ii) If C=0 then the circuit holds the present state.

OR

Q6) a) Design a sequence detector to detect a sequence 111 using D FF (Use Mealy machine). **[9]**

b) Explain **[8]**

i) Rules for state assignments.

ii) State reduction.

Q7) a) Differentiate between ROM and RAM. **[8]**

b) Draw a combinational circuit for a PLA with 3 inputs, 3 product terms and 2 outputs. **[10]**

OR

Q8) a) What is meant by ROM? What are the types of ROM? Compare between them. **[8]**

b) A combinational logic is defined by the functions **[10]**

$\mathbf{F_1(A, B,C) = \Sigma(3 ,5, 6, 7)}$ and $\mathbf{F_2(A,B,C) = \Sigma(0, 2, 4, 7)}$

Implement the circuit using PLA having 3 inputs, 4 product terms and 2 outputs.

Total No. of Questions : 8]

SEAT No. :

P622

[Total No. of Pages : 2

[5869]-244

S.E. (Electronics & Telecommunication)
ELECTRICAL CIRCUITS
(2019 Pattern) (Semester - III) (204183)

Time : 2½ Hours] *[Max. Marks : 70*

Instructions to the candidates:

1) ***Answer Q.1 or Q.2, Q.3 or Q.4, Q.5 or Q.6, Q.7 or Q.8.***
2) ***Neat diagrams must be drawn wherever necessary.***
3) ***Figures to the right side indicate full marks.***
4) ***All questions carry equal marks.***
5) ***Use of logarithmic tables slide rule, Mollier charts, and***
6) ***Electronic pocket calculator and steam tables are allowed.***
7) ***Assume suitable data. if necessary.***

Q1) a) Give basic definition of Y parameters explain why Y parameters are called short circuit admittance parameters. **[9]**

b) Find Z-parameters for the network shown below : **[8]**

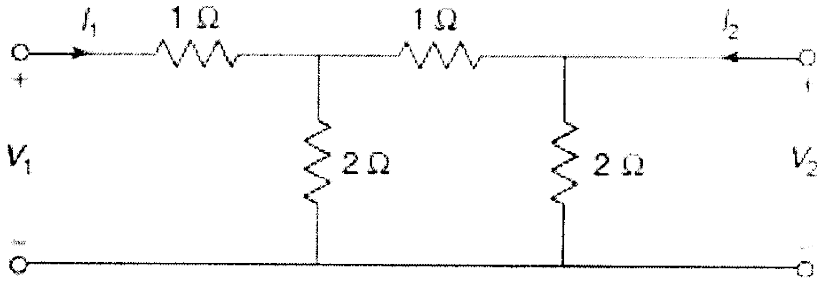

OR

Q2) a) Explain following network functions with necessary equation for two port network : **[9]**

i) Driving point impedance.

ii) Driving point admittance.

iii) Voltage ratio transfer function.

b) Give the applications of Two Port Network Parameters and Explain Network Stability. **[8]**

Q3) a) Draw a neat sketch of DC generator. State the function of each part. **[6]**

b) Derive the e.m.f. equation of DC machine. State clearly the meaning and units of the symbols used. **[6]**

P.T.O.

c) A four pole lap wound DC motor has 540 conductors. Its speed is 1000 rpm. Flux per pole is 25 mwb connected to 230 V DC supply. Armature resistance is 0.8Ω. **[6]**

Calculate :

i) Induced emf.

ii) Armature Current.

iii) Armature Torque.

OR

Q4) a) Derive the torque equation of for DC motor. Draw the torque-current, speed-current and torque-speed characteristics of shunt motor. **[10]**

b) Draw neat diagram and explain operation of 3 pt. starter? **[8]**

Q5) a) Explain working principle of Induction motor and concept of rotating magnetic field. **[6]**

b) Explain difference between squirrel cage induction motor and slip ring induction motor. **[6]**

c) A four pole three phase, 50 Hz induction motor has star connected rotor. The rotor has a resistance of per phase and reactance of per phase. The induced e.m.f. between the slip rings is 100V. If the full load speed is 1460 rpm. Calculate : **[6]**

i) The slip.

ii) e.m.f. induced in the rotor in each phase.

iii) rotor reactance per phase.

iv) the rotor power factor.

OR

Q6) a) List out various starters used for three phase induction motor and explain DOL starter in detail. **[10]**

b) Discuss briefly different methods of speed control of three phase induction motors with neat diagrams. **[8]**

Q7) a) Explain construction of brushless DC motor. Draw and explain torque-speed characteristics. **[9]**

b) What are different types of stepper motors. Explain the operation of variable reluctance motor. **[8]**

OR

Q8) a) Explain the block diagram of electric vehicles State advantages and limitations of Unit 6. **[10]**

b) Compare brushless DC motor with conventional DC motor. **[7]**



Total No. of Questions : 8] **SEAT No. :**

P623 **[Total No. of Pages : 3**

[5869] - 245
S.E. (E & TC/ Electronics)
DATA STRUCTURES
(2019 Pattern) (Semester - III) (204184)

Time : 2½ Hours] ***[Max. Marks : 70***

Instructions to the candidates:

1) ***Answer Q1 or Q2, Q3 or Q4, Q5 or Q6, Q7 or Q8.***
2) ***Neat diagrams must be drawn wherever necessary.***
3) ***Figures to the right indicate full marks.***
4) ***Assume suitable data, if necessary.***

Q1) a) Identify the expression and convert them into the remaining two forms: **[6]**

i) AB + C * DE – FG + + $

ii) – A/B * C $ DE

Note : $ = Exponent operator

b) Write a 'C' function to insert and delete element from queue using an array. **[6]**

c) Define Queue. What are conditions for 'Queue empty' and 'Queue full' when queue is implemented using Array? Explain. **[5]**

OR

Q2) a) Write a 'C' function to PUSH and POP elements from a stack of characters using an array. **[6]**

b) What are the disadvantages of the linear queue? Suggest a suitable method to overcome them. **[6]**

c) Convert the given infix expression to a postfix expression using stack:

(a^b)*c-d/d

Note:^ = Exponent operator. **[5]**

Q3) a) Write limitations of arrays over linked list? Represent the following polynomial using a singly linked list.

$23x^9 + 18x^7 + 41x^6 + 16x^4 + 3$. **[6]**

b) What is a singly linked list? Write C function for inserting a node at a given location into a singly linked list. **[6]**

c) Write a 'C' function for Inserting a number at the front of the circular linked list. **[6]**

OR

P.T.O.

Q4) a) Explain traversal operations in a singly linked list. **[6]**

b) A doubly linked list with numbers to be created. Write node structure and a 'C' function to create a doubly linked list. **[6]**

c) Draw and explain the circular linked list. State the limitations of a singly linked list. **[6]**

Q5) a) Construct the Binary Search Tree (BST)from the following data:
5, 2, 8, 4, 1, 9, 7.
Also show preorder, postorder and inorder traversal for the same. **[6]**

b) Explain basic concept of AVL tree. Also explain four rotations in AVL tree. **[6]**

c) Define the following terms with respect to Trees: **[5]**

i) Root
ii) Subtree
iii) Level of node
iv) Depth of Tree
v) Siblings

OR

Q6) a) Write a recursive 'C' function for inorder and preorder traversal of Binary Search Tree. **[6]**

b) Explain with suitable example how binary tree can be represented using:**[6]**

i) Array

ii) Linked List

c) Write an algorithm to insert an element in a binary search tree implemented using linked representation. **[5]**

Q7) a) Represent the following graph (Fig. 1) using the adjacency matrix and adjacency list. **[6]**

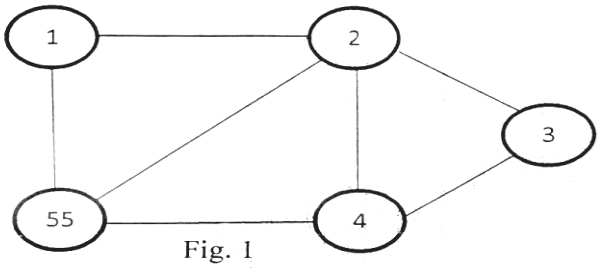

Fig. 1

b) Define indegree and outdegree of a vertex in graph. Find the indegree and outdegree of following graph (Fig. 2). **[6]**

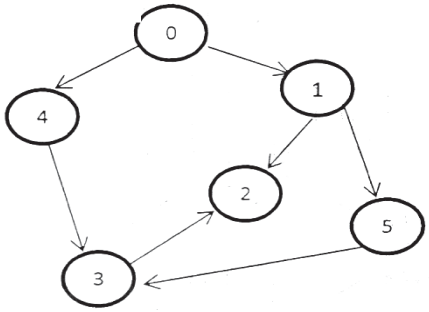

Fig. 2

c) Define with an example: **[6]**

i) Undirected Graph
ii) Directed Graph
iii) Weighted Graph

OR

Q8) a) Find out Minimum Spanning Tree of the following graph (Figure 3) using Kruskal's algorithm. **[6]**

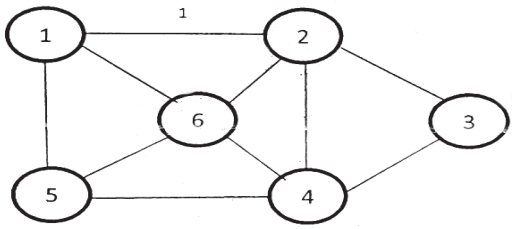

Fig 3

b) Explain with suitable example, DFS and BFS traversal of a graph. **[6]**

c) Find the shortest path from node 'a' to all nodes in the graph shown in fig.4 using Dijkstra's algorithm. **[6]**

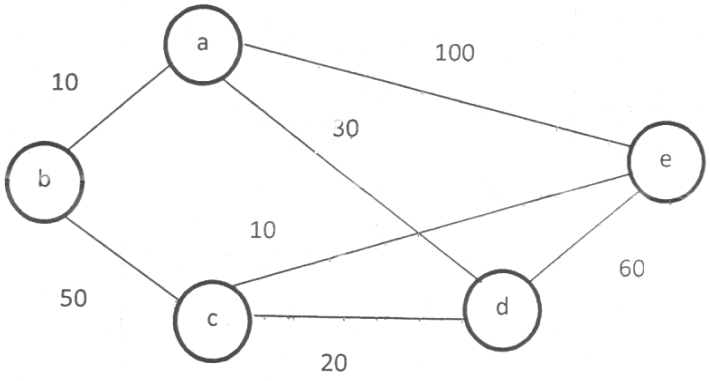

Fig 4

Total No. of Questions : 8]

SEAT No. :

P624

[Total No. of Pages : 3

[5869]-246

S.E. (Electronics/Electronics & Telecommunication)
SIGNALS AND SYSTEMS
(2019 Patter) (Semester - IV)

Time : 2.30 Hour] ***[Max. Marks : 70***

Instructions to the candidates:

1) ***Neat diagrams must be drawn wherver necessary.***
2) ***Figures to the right indicate full marks.***
3) ***Use of logarithmic tables, slide-rule, mollier charts, electronic pocket calculator steam tables is allowed.***
4) ***Assume suitable data if necessary.***

Q1) a) What is fourier series. What are the methods of finding fourier series. Write their expressions. **[6]**

b) State the following properties of DT fourier series. **[6]**

i) Time scaling.

ii) Linearity.

iii) Convolution.

c) Find out the exponential fourier series for impulse train shown in fig. below. Also plot it's magnitude and phase spectrum. **[6]**

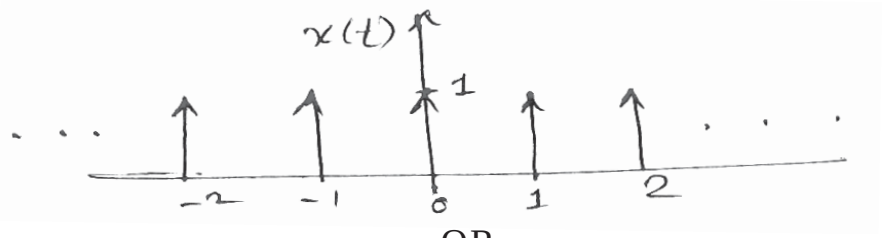

OR

Q2) a) Explain Gibb's phenomenon for fourier series. **[4]**

b) Determine the fourier series for the signal with the periodic wave as shown in fig. below. **[8]**

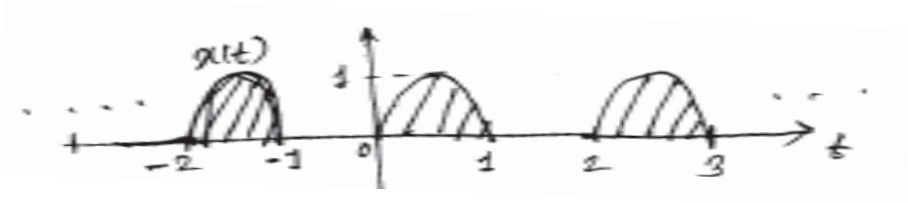

c) State the following properties of fourier series. **[6]**

i) Duality.

ii) Time Bandwidth.

iii) Parseval's Relation.

P.T.O.

Q3) a) Find the fourier transform of the signal $x(t) = e^{-at} u(t)$. Also sketch magnitude and phase response. **[6]**

b) Obtain the fourier Transform using the property. **[6]**

i) $x(t) = \frac{d}{dt}\left[e^{-at} u(t)\right]$.

ii) $x(t) = \delta(t) + e^{-at} u(t)$

c) State and explain Dirichlet's conditions for the existence of fourier transform. **[5]**

OR

Q4) a) State any six properties of fourier transform. **[6]**

b) Obtain the Inverse Fourier Transform of the signal given below. **[6]**

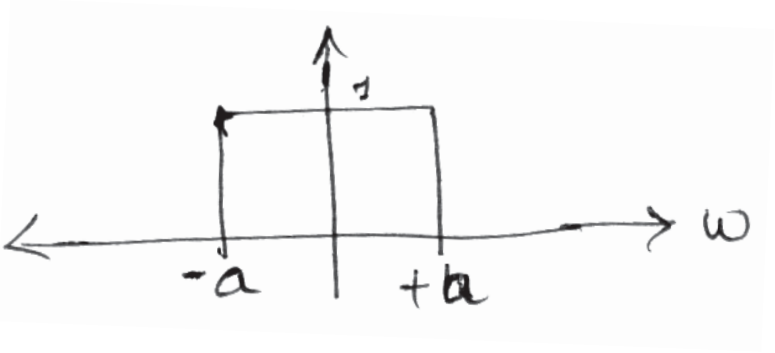

c) Define Magnitude response and phase response. Obtain the Fourier Transform of impulse response. Also sketch magnitude response of impulse signal . **[5]**

Q5) a) Find the initial and final value of the given function. **[6]**

$$X(s) = \frac{s+2}{s^2+5s+7}.$$

b) State the limitations of Fourier Transform and need of laplace transform. Compare both. **[6]**

c) Given the Laplace transform of. **[6]**

$$X(s) = \frac{2s}{s^2+2}.$$

Determine $x(t)$ and Laplace transform of $x(3t)$ and $x(t-2)$.

OR

Q6) a) State any six properties of Laplace transform. **[6]**

b) Find the Laplace Transform of periodic wave given below. **[6]**

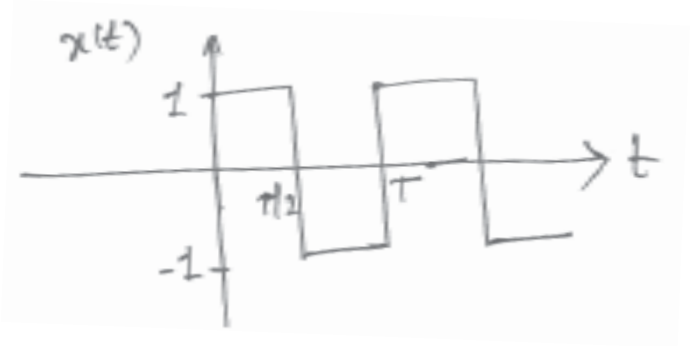

c) Find the Inverse Laplace transform of $X(s) = \frac{2}{s(s+1)(s+2)}$ with ROC specified as –1< Re CS > < 0. **[6]**

Q7) a) A box contains 3 white, 4 red and 5 black balls. A ball is drawn at random find the probability that is. **[6]**

i) Red.

ii) Not Black.

iii) Black or white.

b) Define PDF and CDF. Also, state the properties of CDF and PDF. **[6]**

c) Given the pdf for different X values as follows. x = 1, pdf = 0.2, x = 2, pdf = 0.1, x = 3, pdf = 0.3, x = 4, pdf = 0.3, x = 5, pdf = 0.1. Draw the pdf and its corresponding CDF. Also plot the CDF for same. **[5]**

OR

Q8) a) What are statistical properties of Random Variables. State them (any 3). **[6]**

b) Two fair, six-sided dice are thrown. Find the probability of. **[5]**

i) Throwing a sum of 11.

ii) Throwing two 7s.

iii) Throwing a pair.

c) Consider a fair die, plot a CDF v/s 'x' find the CDF of each value of x plot PDF & CDF. **[6]**

✡ ✡ ✡

Total No. of Questions : 8]

SEAT No. :

P625

[Total No. of Pages : 2

[5869] - 247
S.E. (Electronics & Telecommunication)
CONTROL SYSTEM
(2019 Pattern) (Semester - IV)

Time : 2½ Hours] *[Max. Marks : 70*

Instructions to the candidates:

1) ***Solve question Q.1 or Q.2, Q.3 or Q.4, Q.5or Q.6, Q.7 or Q.8.***
2) ***Figures to the right indicate full marks.***
3) ***Assume the suitable data, if necessary.***

Q1) a) The characteristics equation of closed loop system is given as $1 + G(s)\,H(s) = s^6 + 2s^5 + 8s^4 + 12s^3 + 20s^2 + 16s + 16$. Check the stability of system and determine number of closed loop pole lies in RHP of s plane. **[8]**

b) A unity feedback system with open loop transfer function $G(s) = \frac{k}{(s+1)^4}$.

Plot root locus. **[10]**

OR

Q2) a) The Characteristics equation of closed loop system is given as $1 + G(s)\,H(s) = s^3 + 7s^2 + 25s + 39 = 0$. Determine the number of roots which are lying on left half side of $\sigma = -1$. **[8]**

b) Plot a root locus for the system

$$G(s)\,H(s) = \frac{k}{s(s+4)(s^2+4s+13)} \quad 0 < k < \infty. \qquad \textbf{[10]}$$

Q3) a) Construct Nyquist plot and find Phase crossover frequency and gain margin if : $G(s)H(s) = \frac{1}{s(s+1)(s+2)}$. Also Comment on Stability. **[9]**

b) State the Limitations of frequency domain approach. **[8]**

OR

P.T.O.

Q4) a) Draw Bode plot of the system with open loop transfer function: $G(s) = \frac{20(s+5)}{s(s+10)}$ and determine gain margin, Phase margin. Also comment on Stability. **[9]**

b) State and explain the various frequency domain specifications. **[8]**

Q5) a) Obtain the controllable and Observable canonical state models for the system with transfer function G(s) = s+3 / s^2+3s+2 **[9]**

b) Define the terms **[9]**

i) State

ii) State Variables

iii) State Vector

iv) State Space

OR

Q6) a) Find transfer function of $= \begin{bmatrix} -5 & -1 \\ 3 & -1 \end{bmatrix} \begin{bmatrix} x_1 \\ x_2 \end{bmatrix} + \begin{bmatrix} 2 \\ 5 \end{bmatrix} r(t);\ y = \begin{bmatrix} 1 & 2 \end{bmatrix} \begin{bmatrix} x_1 \\ x_2 \end{bmatrix}$. **[9]**

b) Determine the State transition matrix of state equation $X = \begin{bmatrix} 0 & 1 \\ -8 & -9 \end{bmatrix}$ x(t). **[9]**

Q7) a) State the characteristics of P, I, and D controllers. **[9]**

b) What do you understand by Integral Reset in PID controller? Explain with suitable example. **[8]**

OR

Q8) a) Describe the Ziegler-Nichols method of process-control loop tuning. **[9]**

b) In an application of the Ziegler-Nichols method, a process begins oscillation with a 30% proportional band in an 11.5 min period. Find the nominal three mode controller settings. **[8]**

Total No. of Questions : 8]

SEAT No. :

P626

[Total No. of Pages : 3

[5869] - 248

S.E. (Electronics / E & TC / Electronics & Computer)

PRINCIPLES OF COMMUNICATION SYSTEMS

(Semester - IV) (2019 Pattern) (204193)

Time : 2½ Hours] ***[Max. Marks : 70***

Instructions to the candidates :

1) ***Answer Q.1 or Q.2, Q.3 or Q.4, Q.5 or Q.6, Q.7 or Q.8.***
2) ***Neat diagrams must be drawn whenever necessary.***
3) ***Assume suitable data, if necessary.***

Q1) a) Define modulation index & Deviation ratio of FM & sketch FM waveform for sinusoidal input. **[6]**

b) Compare frequency modulation with phase modulation. **[6]**

c) FM wave is represented by following eq^{n} V = 20 sin [10^{8}t + 4 sin 1200t] calculate, **[6]**

i) Carrier frequency

ii) Modulating frequency

iii) Modulation index & maximum deviation

iv) Power dissipated by FM wave in 8Ω resistor.

OR

Q2) a) Explain FM generation by Armstrong method with neat block diagram.**[6]**

b) A carrier is frequency modulated with Sinusoidal signal of 2kHz resulting in frequency deviation of 6kHz **[6]**

i) Find BW & modulation index of modulated wave

ii) If amplitude of modulating Sinusoidal signal is increased by 2 & its frequency is halved, find maximum frequency deviation & bandwidth of new modulated signal.

c) Explain pre-emphasis in FM with circuit diagram & frequency response. **[6]**

P.T.O.

Q3) a) State sampling theorem in time domain. Explain sampling process with block diagram. **[6]**

b) Describe generation of pulse width modulation with diagram and waveform. **[6]**

c) Explain Aliasing effect & draw the sampled output for sampling frequency less than equal to and greater than maximum frequency of analog signal.**[5]**

OR

Q4) a) Compare pulse Amplitude modulation and pulse position modulation.**[6]**

b) Define Time Division multiplexing. Explain concept of TDM with neat diagram. **[6]**

c) Describe detection of PPM with block diagram. **[5]**

Q5) a) Draw block diagram of PCM system & Describe working of PCM transmitter. **[6]**

b) State types of quantization. Explain uniform quantization with neat waveform. **[6]**

c) Discuss with neat schematic, transmitter and receiver for DPCM (Differential pulse code modulation). **[6]**

OR

Q6) a) Compare Analog and Digital communication. **[6]**

b) Draw Block diagram of Delta modulation system & comment on drawback of Delta Modulation. **[6]**

c) Explain working of Adaptive Delta Modulation with block diagram & state advantages of ADM over DM. **[6]**

Q7) a) Draw the following data formats for bit stream 10110100101 **[6]**

i) Unipolar RZ ii) Unipolar NRZ

iii) Polar RZ iv) Polar NRZ

v) AMI (Alternative mark Inversion)

vi) Split Phase Manchester

b) State different Synchronization technique & explain any one in detail with neat diagram. **[6]**

c) Define Equalizer. Explain Adaptive equalization with block diagram & State Advantages of Adaptive equalization. **[5]**

OR

Q8) a) Explain the working principle of scrambling & unscrambling with example. **[6]**

b) Describe eye pattern Graphical Display of Inter Symbol Interference with diagram. **[6]**

c) Describe concept of digital multiplexer and Demultiplexer with necessary diagram. **[5]**

▽▽▽▽

Total No. of Questions : 8]

SEAT No. :

P627

[Total No. of Pages : 2

[5869]-249

S.E. (Electronics / E & TC/Electronics & Computer)

OBJECT ORIENTED PROGRAMMING (2019 Pattern) (Semester - IV)

Time : 2½ Hours] ***[Max. Marks : 70***

Instructions to the candidates:

1) ***Answer Q.1 or Q.2, Q.3 or Q.4, Q.5 or Q.6, Q.7 or Q.8.***
2) ***Neat diagrams must be drawn wherever necessary.***
3) ***Figures to the right side indicate full marks.***
4) ***Use of calculator is allowed.***
5) ***Assume suitable data if necessary.***

Q1) a) What is operator overloading? Why it is necessary to overload an operator? **[6]**

b) Write a program in C++ to use scope resolution operator. **[6]**

c) What is friend function? What are the merits & demerits of using the friend function? **[6]**

OR

Q2) a) What are the rules for over loading operators. **[6]**

b) Which operators can not be overloaded? Write steps to overload + operator so that it can add two complex numbers. **[6]**

c) Write down program to overload unary operators? (Any three operators). **[6]**

Q3) a) Explain virtual base class & virtual function with example? **[6]**

b) What does inheritance mean in C++? What are different forms of inheritance? Give example of each. **[6]**

c) Discuss the ways in which inheritance promotes software reuse, saves time during program development and helps prevent errors. **[6]**

OR

P.T.O.

Q4) a) What is the ambiguity that arises in multiple inheritance? How it can be overcome. Explain with example. **[6]**

b) What are types of inheritance? Explain in detail. **[6]**

c) Discuss the role of access specifiers in inheritance and show their visibility when they are inherited as public, private protected. **[6]**

Q5) a) Write a C++ program involving a function template. **[5]**

b) Explain exception handling mechanism in C++? Write a program in C++ to handle divide by zero exception. **[7]**

c) Explain class template and function template with example. **[5]**

OR

Q6) a) Explain class template using multiple parameters? Write a program in C++. **[7]**

b) Explain name space with example. **[5]**

c) What is stream? Explain types of streams available in C++. **[5]**

Q7) a) What is File mode? Explain any four modes supported by C++. **[6]**

b) Explain error handling during file operations. **[5]**

c) What is the difference between opening a file with construction function & open ( ) function. **[6]**

OR

Q8) a) Write a program using the open ( ), eof ( ) & getline ( ) functions to open & read file contents line by line. **[6]**

b) Explain file functions for text file and binary file operations. **[7]**

c) Explain file opening modes in detail. **[4]**



Total No. of Questions : 9]

SEAT No. : ____

P628

[Total No. of Pages : 4

[5869]-251

S.E. (Instrumentation Engineering)

ENGINEERING MATHEMATICS - III

(2019 Pattern) (Semester - III) (207008)

Time : 2½ Hours] ***[Max. Marks : 70***

Instructions to the candidates:

1) ***Attempt Q.1, Q.2 or Q.3, Q.4 or Q.5, Q.6 or Q.7, Q.8 or Q.9.***
2) ***Question No. 1 compulsory.***
3) ***Neat diagrams must be drawn wherever necessary.***
4) ***Black figures to the right indicate full marks.***
5) ***Use of electronic pocket calculator is allowed.***
6) ***Assume suitable data is necessary.***

Q1) Choose the correct option. **[10]**

a) If $|z|<2$, inverse z transform of $\frac{z}{z-2}$ is given by **[2]**

i) $2^{k-1}\ k < 0$ ii) $-2^{k-1}\ k \geq 0$

iii) $-2^{k}\ k < 0$ iv) $2^{k}\ k \geq 0$

b) Which of the following is not the value of correlation coefficient between x and y? **[1]**

i) 0 ii) 1

iii) –1 iv) 2

c) If three coins are tossed. What is the probability of getting exactly 2 heads? **[2]**

i) $\frac{1}{8}$ ii) $\frac{2}{8}$

iii) $\frac{3}{8}$ iv) $\frac{4}{8}$

d) $\nabla(e^r)$ is equal to **[2]**

i) $\frac{e^r}{r}\vec{r}$ ii) $e^r\vec{r}$

iii) $\frac{e^r}{r}$ iv) $\frac{r}{e^r}\vec{r}$

P.T.O.

e) For a circle c, $|z| = 3$, The value of $\oint_c \frac{z}{z-4} dz$ is equal to **[1]**

i) π ii) $2\pi i$

iii) $\pi/2$ v) 0

f) If $f(z) = u + iv$ is analytic function then **[2]**

i) v is harmonic but u is not harmonic

ii) u is harmonic but v is not harmonic

iii) Both u and v are harmonic

vi) Neither u nor v is harmonic

Q2) a) Find Fourier cosine transform of $\begin{cases} 1-x^2, & |x| \le 1 \\ 0 & |x| > 1 \end{cases}$. **[5]**

b) Attempt any one **[4]**

i) Find z - transform of $f(k) = k.\left(\frac{1}{2}\right)^k$, $k \ge 0$.

ii) Find inverse z - transform of $F(z) = \frac{1}{(z-2)(z-3)}, |z| > 3$.

c) Obtain $f(k)$, given that, $f(k+1) + \frac{1}{2} f(k) = \left(\frac{1}{2}\right)^k$, $f(0) = 0$, $k \ge 0$ **[6]**

OR

Q3) a) Attempt any one **[5]**

i) Find z-transform of $f(k) = 4^k + 5^k$, $k \ge 0$

ii) Find inverse z-transform of, $F(z) = \frac{z^3}{(z-1)\left(z-\frac{1}{2}\right)^2}, |z| > \frac{1}{2}$.

b) Given, $F_s(\lambda) = \begin{cases} 1 & 0 < \lambda \le 1 \\ 0 & \lambda > 1 \end{cases}$, find $f(x)$ using inverse sine transform. **[4]**

c) Solve the integral equation, $\int_0^\infty f(x) \sin \lambda x \, dx = \begin{cases} 2(1-\lambda), & 0 \le \lambda < 1 \\ 0, & \lambda \ge 1 \end{cases}$. **[6]**

Q4) a) Find the first four moments about the arithetic mean for the following distribution. **[5]**

x	1	2	3	4	5
freq.	10	20	40	60	30

b) If the two lines of regression are $9x + y - \lambda = 0$ and $4x + y = \mu$ and the means of x and y are 2 and –3 respectively, find the values of λ, μ and the coefficient of correlation between x and y. **[5]**

c) Determine the probability of getting sum 9 exactly twice in 3 throws with a pair of fair dice. **[5]**

OR

Q5) a) Find mean & standard deviation of the following distribution. **[5]**

x	1	2	3	4
freq	4	6	8	10

b) Find first four moments about mean, if the first four moments about median are 1, 2, 4 and 6. **[5]**

c) A machine produces 2% defective bulbs. Bulbs are sold in a box of 100 bulbs, with a guarantee that no more than 3 bulbs are defective. Use poisson Distribution to determine the probability that a box will fail to meet the guarantee. **[5]**

Q6) a) Find directional derivative of $\phi = 4xz^3 - 3x^2y^2z$ at (2, –1, 2) in the direction $2\hat{i} - 3\hat{j} + 6\hat{k}$. **[5]**

b) Show that vector field $\bar{F} = (x^2 - yz)\hat{i} + (y^2 - xz)\hat{j} + (z^2 - xy)\hat{k}$ is irrotational. Also find corresponding scalar potential function ϕ such that $\bar{F} = \nabla\phi$. **[5]**

c) Evaluate $\int_C \bar{F} \cdot d\bar{r}$ for $\bar{F} = (2x + y)\hat{i} + (3y - x)\hat{j}$ and C is parabolic curve $y^2 = x$ joining points (0,0) and (1, 1). **[5]**

OR

Q7) a) Find the directional derivative of $\phi = xy + yz^2$ at (1, –1, 1) along the line $\frac{x-1}{1} = \frac{y+1}{2} = \frac{z-1}{2}$. **[5]**

b) Show that (Any one) **[5]**

i) $\nabla^2\left(\frac{\bar{a}\cdot\bar{b}}{r}\right) = 0$

ii) $\nabla\left(\frac{\bar{a}\cdot\bar{r}}{r^n}\right) = \frac{\bar{a}}{r^n} - \frac{n(\bar{a}\cdot\bar{r})\bar{r}}{r^{n+2}}$

c) Using Green's theorem evaluate $\oint_C \left[\cos y\hat{i} + x(1-\sin y)\hat{j}\right]\cdot d\bar{r}$ where C is the closed curve $x^2 + y^2 = 1$, z = 0. **[5]**

Q8) a) If $V = \frac{-y}{x^2+y^2}$ find u such that $f(z) = u + iv$ is analytic and determine $f(z)$ in terms of z. **[5]**

b) Evaluate $\oint_C \frac{3z^2+5z+2}{(z-2)^2}dz$. Where C is $\frac{x^2}{9} + \frac{y^2}{25} = 1$. **[5]**

c) Find a bilinear transformation $w = f(z)$ which transform the points ∞, i, 0 of z-plane onto the points 0, i, ∞ of w-plane respectively. **[5]**

OR

Q9) a) If $F(z) = u + iv$ is an analytic function show that both u and v are harmonic **[5]**

b) Evaluate: $\oint_C \frac{\sin \pi z^2 + 6z}{(z-1)(z+2)}dz$ Where C closed curve $|z| = 3$. **[5]**

c) Find image of straight line $y = x$ under the transformation $w = \frac{z-1}{z+1}$. **[5]**

♦ ♦ ♦

Total No. of Questions : 8]

SEAT No. :

P629

[Total No. of Pages : 2

[5869]-252
S.E. (Instrumentation & Control)
SENSORS & TRANSDUCERS
(2019 Pattern) (Semester - III)

Time : 2½ Hours] ***[Max. Marks : 70***

Instructions to the candidates:

1) ***Answer Q.1 or Q.2, Q.3 or Q.4, Q.5 or Q.6, Q.7 or Q.8.***
2) ***Neat diagrams must be drawn whenever necessary.***
3) ***Figures to the right indicate full marks.***
4) ***Assume suitable data, if necessary and mention it clearly.***
5) ***Use of non-programmable calculator is allowed.***

Q1) a) Suggest the suitable instrument to calibrate pressure gauge for given range & justify the suggestion with neat sketch. **[9]**

b) Suggest the suitable scheme with appropriate transducer for high pressure measurement & justify it. **[9]**

OR

Q2) a) Enlist the transducers used for low pressure measurement Elaborate each transducer enlisted with neat sketch. **[9]**

b) Specify the selection criteria for low pressure measurement transducers. **[9]**

Q3) a) Explain lead wire temperature compensation technique. **[9]**

b) Explain cold junction temperature compensation technique. **[8]**

OR

Q4) a) Write notes on pyrometer & thermopiles. **[9]**

b) Write details on temperature measurement scales, units & their relation. **[8]**

P.T.O.

Q5) a) Describe head type flow measurement transducers. **[9]**

b) Suggest the suitable transducer for solid flow measurement & Elaborate any one with neat sketch. **[9]**

OR

Q6) a) State the significance of ultrasonic flowmeter & elaborate the concept in brief with neat sketch. **[9]**

b) Derive the expression for Bernoulli's equation for incompressible fluid. **[9]**

Q7) a) Specify different level measurement approaches in the industries, suggest suitable transducer used for solid level measurement & explain it. **[9]**

b) Explain the resistive & capacitive types of sensors for humidity measurement. **[8]**

OR

Q8) a) Explain any one method of viscosity measurement. **[8]**

b) Explain any one method for pH & conductivity measurement each. **[9]**

❄ ❄ ❄

Total No. of Questions : 8]

SEAT No. : ____

P630

[Total No. of Pages : 2

[5869]-253

S.E. (Instrumentation and Control)

LINEAR INTEGRATED CIRCUITS

(2019 Pattern) (Semester - III)

Time : 2½ Hours] ***[Max. Marks : 70***

Instructions to the candidates:

1) ***Answer Q.1 or Q.2, Q.3 or Q.4, Q.5 or Q.6, Q.7 or Q.8.***
2) ***Neat diagrams must be drawn wherever necessary.***
3) ***Figures to the right side indicate full marks.***
4) ***Assume Suitable data if necessary.***

Q1) a) Draw neat diagram of three input averaging amplifier and derive the equation for output voltage. **[9]**

b) Draw neat diagram of floating load V-I converter and derive the equation for output current. **[8]**

OR

Q2) a) Illustrate with neat diagram, difference amplifier using an operational amplifier. **[9]**

b) Write short note on an Isolation Amplifier. **[8]**

Q3) a) Illustrate with suitable circuit diagram precision half wave rectifier. Draw proper output wave forms. **[9]**

b) Design wien bridge oscillator using operational amplifier for output frequency of 5KHz. Assume suitable data. **[9]**

OR

Q4) a) Design Phase Shift oscillator using operational amplifier for output frequency of 1KHz. Assume suitable data. **[9]**

b) Illustrate with suitable circuit diagram inverting comparator. Draw proper output wave forms. **[9]**

P.T.O.

Q5) a) Describe the operation of timer 555 with suitable block diagram. **[9]**

b) Describe the operation of voltage controlled oscillator with neat block diagram. **[8]**

OR

Q6) a) Illustrate operation of PLL with suitable block diagram. **[8]**

b) Design monostable multivibrator using timer 555 pulse width of 5 seconds. **[9]**

Q7) a) Design second order Low pass filter for f_L=10 KHz. And pass band gain of 2. **[9]**

b) Compare active filters and passive filters. Draw the ideal frequency response for high pass, low pass, band pass and band reject filters. **[9]**

OR

Q8) a) Design second order high pass filter for f_L=1 KHz. **[9]**

b) Elaborate with neat circuit diagram, high voltage regulator using IC 723. **[9]**



Total No. of Questions : 8]

SEAT No. :

P631

[Total No. of Pages : 2

[5869]-254

S.E. (Instrumentation and Control)

ELECTRICAL MEASUREMENTS AND INSTRUMENTATION

(2019 Pattern) (Semester - III)(206263)

Time : 2½Hours] ***[Max. Marks : 70***

Instructions to the candidates:

1) ***Solve Q.1 or Q.2, Q.3 or Q.4, Q.5 or Q.6, Q.7 or Q.8.***
2) ***Figure to the right side indicate full marks.***
3) ***Neat diagrams must be drawn wherever necessary.***
4) ***Use of Non-programmable calculator is allowead.***
5) ***Assume suitable data, if necessary.***

Q1) a) Draw and explain diagram of a CRO. **[8]**

b) Explain the different probes used for CRO. **[6]**

c) Differentiate between CRO and DSO. **[4]**

OR

Q2) a) Explain in brief what is Lissajous pattern? **[4]**

b) How is Lissajous pattern used for frequency measurement? **[4]**

c) Explain with neat diagram how is Lissajous pattern used for phase measurement? **[6]**

d) Draw and explain block diagram of a DSO. **[4]**

Q3) a) Explain in detail the working of wheatstone bridge with equations. **[5]**

b) Discuss the errors in wheatstone bridge along with limitations. **[5]**

c) What is wheatstone bridge sensitivity? **[4]**

d) Differentiate between wheatstone bridge and Kelvin bridge. **[3]**

OR

P.T.O.

Q4) a) What do you mean by Quantity factor and Dissipation factor in AC bridges? **[5]**

b) Elaborate on detectors used in AC bridges. **[5]**

c) What are different types of Maxwell's bridge? **[7]**

Q5) a) Why is Analog-to Digital convertors required? **[4]**

b) Draw and explain the working of a digital multimeter. **[8]**

c) Explain the different types of ADCs. **[6]**

OR

Q6) a) What is the difference between analog instruments and digital instruments? **[6]**

b) Explain in detail the R-2R DAC. **[6]**

c) Draw and explain the working of a Digital kilo watt Hour Meter. **[6]**

Q7) a) How are recorders classified? **[6]**

b) Explain the working of magnetic Tape recorder along with diagram. **[6]**

c) Write short note on applications of recorders. **[5]**

OR

Q8) a) Explain with block diagram virtual instrumentation. **[8]**

b) Explain in brief components of Lab VIEW application. **[9]**

● ● ●

Total No. of Questions : 8]

SEAT No. :

P632

[Total No. of Pages : 2

[5869]-255

S.E. (Instrumentation)
CONTROL SYSTEM COMPONENTS
(2019 Pattern) (Semester - III) (206264)

Time : 2½ Hours] *[Max. Marks : 70*

Instructions to the candidates:

1) ***Answer Q.No.1 or Q.No.2, Q.No.3 or Q.No.4, Q.No.5 or Q.No.6, Q.No.7 or Q.No.8.***
2) ***Figures to the right side indicate full marks.***
3) ***Neat diagrams must be drawn wherever necessary.***
4) ***Assume suitable data if necessary.***

Q1) a) Explain the Pneumatic Power supply with neat sketch. **[6]**

b) Compare Electric System with pneumatic system. (Any 4 important points). **[6]**

c) State the necessity of filter unit in Pneumatic System. **[5]**

OR

Q2) a) List various types of flow control valve. Explain any one in details. **[6]**

b) Compare Pneumatic System with Hydraulic System (Any 4 important points). **[6]**

c) What is adjustable cushioning of air cylinder? State its effect on the cylinder performance. **[5]**

Q3) a) Draw and explain Meter-out control circuit in details. **[6]**

b) Explain construction & working of any one type of Hydraulic motor. **[6]**

c) Draw and explain Meter-in control circuit in details. **[6]**

OR

Q4) a) Draw hydraulic circuit for A+B+, sequential operation of A and B two cylinders. **[6]**

b) Compare Hydraulic & Pneumatic system (Any 4 important points). **[6]**

c) Draw and explain 4/3 way Hydraulic valve. **[6]**

P.T.O.

Q5) a) Draw and explain working of IGBT. Give its application. **[10]**

b) Draw and explain working of TRIAC. **[7]**

OR

Q6) a) List various commutation techniques. Explain any one in detail. Write its application. **[10]**

b) Draw and explain circuit of an IGBT. Explain its various parts. **[7]**

Q7) a) Explain ISA sequence in Alarm Annunciation system. Draw its block diagram. **[10]**

b) Explain significance of square root extractor with reference to Differential Pressure Transmitter. **[8]**

OR

Q8) a) Explain use of Fuse. Draw and explain working of any one fuse in detail. Desirable characteristics material according to rating. **[10]**

b) Explain how synchros can be used as Position control application. **[8]**



Total No. of Questions : 8]

SEAT No. :

P633

[Total No. of Pages : 3

[5869]-256

S.E. (Instrumentation & Control Engineering)

CONTROL SYSTEMS

(2019 Pattern) (Semester - IV)

Time : 2.30 Hours] *[Max. Marks : 70*

Instructions to the candidates:

1) ***Answer Q1 or Q2, Q3 or Q4, Q5 or Q6, Q7 or Q8.***
2) ***Neat diagrams must be drawn wherever necessary.***
3) ***Figures to the right indicate full marks.***
4) ***Assume suitable data if necessary.***
5) ***Use of non-programmable calculators/Log table is allowed.***

Q1) a) Apply the block digram reduction rules to reduce the following system into canonical form and determine its control ratio. **[10]**

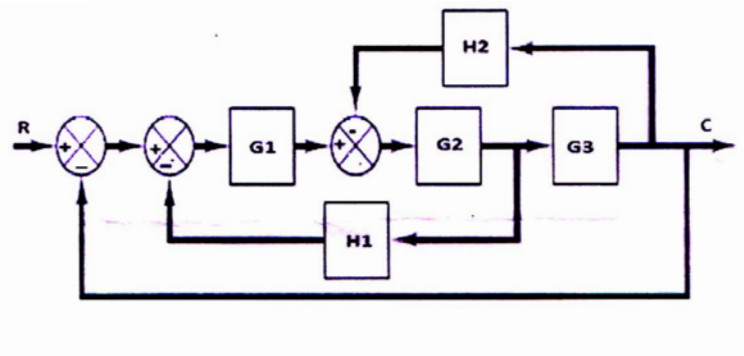

b) Compute the closed-loop transfer function of the system represented by following SFG. **[8]**

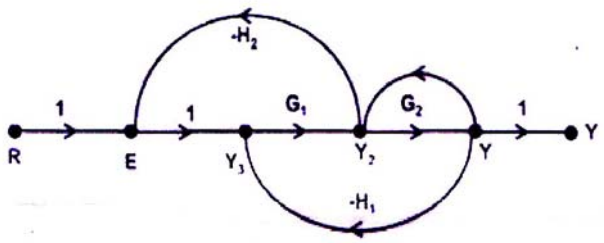

OR

P.T.O.

Q2) a) Apply Mason's gain rule to calculate the transfer function of the system represented by following signal Flow Graph. **[10]**

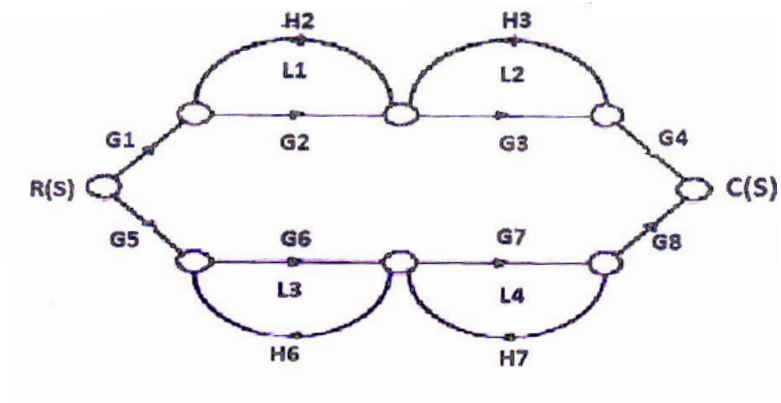

b) Determine the transfer function C(S)/R(S) of the system shown in the following figure. **[8]**

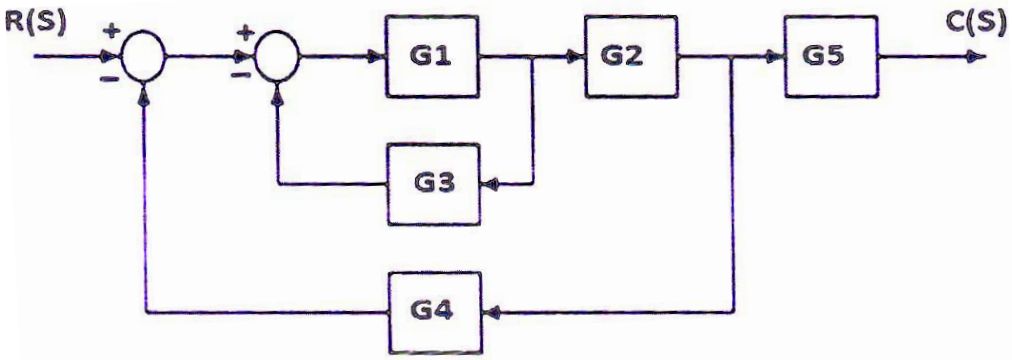

Q3) a) Explian the transient response specifications of second order system with neat diagram. **[7]**

b) A certain feedback system is described by the following transfer function. **[10]**

$$G(s)=\frac{16}{s^2+4s+16}, H(s)=Ks$$

Determine the value. of K, peak overshoot and corresponding peak-time, settling time of the system if the damping ratio is 0.8.

OR

Q4) a) A feedback control system is described as. **[7]**

$$G(s)=\frac{50}{s(s+2)(s+5)}, H(s)=\frac{1}{s}$$

For a unit step input, determine k_p, K_v and K_a.

b) The open loop transfer function of a unity feedback control system is given by. **[10]**

$$G(s)=\frac{K}{s(1+sT)}$$

By what factor the amplifier gain K should be multiplied so that the damping ratio is increased from 0.3 to 0.9.

Q5) Explain the Method of calculating the breakpoints. Plot the root locus pattern of a system whose forward path transfer function is. **[17]**

$$G(s)=\frac{K}{s(s+2)(s+3)}$$

OR

Q6) The open-loop transfer function of a feedback control system is given by. **[17]**

$$G(s)=\frac{K(s+1)}{s(1+Ts)(1+2s)}$$

The parameters K and T may be represented in a plane with K as the horizontal axis and T as vertical axis. Apply the Routh-Hurwitz criterion to determine the region in which the closed-loop system is stable.

Q7) a) Sketch the Magnitude and Phase plot and determine the gain cross-over and phase cross over frequencies. **[10]**

$$G(s)=\frac{10}{s(1+0.5s)(1+0.1s)}$$

b) The forward path transfer function of a unity feedback control system is. **[8]**

$$G(s)=\frac{100}{s(s+6.54)}$$

Find the resonance peak M_r, resonant frequency ω_r and bandwidth of the closed loop system.

OR

Q8) a) Sketch the bode plot and determine the gain cross-over and phase cross over frequencies. **[10]**

$$G(s)=\frac{1000}{s(1+0.1s)(1+0.001s)}$$

b) Sketch the polar plot for. **[8]**

$$G(s)=\frac{1}{s(s+1)}.$$



Total No. of Questions : 8]

SEAT No. :

P634

[Total No. of Pages : 2

[5869]-257
S.E. (Instrumentation & Control)
DIGITAL ELECTRONICS
(2019 Pattern) (Semester - IV)

Time : 2½ Hours] *[Max. Marks : 70*

Instructions to the candidates:

1) ***Answer Q.1 or Q.2, Q.3 or Q.4, Q.5 or Q.6, Q.7 or Q.8.***
2) ***Neat diagrams must be drawn wherever necessary.***
3) ***Figures to the right side indicate full marks.***
4) ***Assume suitable data if necessary.***

Q1) a) Design and explain full adder circuit with logic table, k-map, logic equation and logic diagram. **[9]**

b) Design and explain 4:1 MUX with block diagram, truth-table, equation and logic diagram. **[9]**

OR

Q2) a) Design and explain 2-bit comparator with truth table, k-map, equations and logic diagram. **[9]**

b) Design and explain BCD to 7-segment decoder driver IC 7447 along with display. Also describe the concept of common anode and common cathode type display. **[9]**

Q3) a) What is sequential logic circuits? Draw and explain JK flip-flop along with logic diagram, truth table. **[9]**

b) What are different types of memories? Discuss volatile and non-volatile, flash and bubble memories. **[8]**

OR

Q4) a) Design the Conversion of JK flip-flop into T-type flip-flop with excitation table, k-map and logic diagram. **[9]**

b) What is limitation of SR flip-flop? Describe the Delay flip-flop along with logic diagram, truth-table. **[8]**

P.T.O.

Q5) a) What is shift register? Discuss SISO right shift registers along with logic diagram, timing diagram and function-table. **[9]**

b) What is modulus of counter? Design and discuss 2-bit Asynchronous counter with logic diagram, function table. **[9]**

OR

Q6) a) What is states of counter? Design and discuss Synchronous up-counter using logic diagram. **[9]**

b) What is presattable counter? Design and explain 3 to 15 UP counter using IC 74193. **[9]**

Q7) a) What is PLD? Discuss PLA with neal diagram(input buffer, output buffer, AND Gate, OR Gate etc). **[9]**

b) Implement the following Boolean function using PLA. **[8]**

$A=XY+XZ'$

$B=XY'+YZ+XZ'$

OR

Q8) a) Classify logic families. Compare in details TTL with CMOS. **[9]**

b) Implement CMOS NAND Gate using pMOS and nMOS gates. **[8]**

Total No. of Questions : 8]

SEAT No. :

P635

[Total No. of Pages : 2

[5869] - 258

S.E. (Instrumentation & Control Engineering)

PROCESS LOOP ELEMENTS

(2019 Pattern) (Semester - IV) (206270)

Time : 2½ Hours] ***[Max. Marks : 70***

Instructions to the candidates :

1) ***Answer Q.1 or Q.2, Q.3 or Q.4, Q.5 or Q.6 and Q.7 or Q.8.***
2) ***Figures to the right indicate full marks.***
3) ***Neat diagrams must be drawn wherever necessary.***
4) ***Assume suitable data, if necessary.***

Q1) a) Explain two position and floating control mode in brief with neat sketch. **[9]**

b) Classify continuous control modes used in process control system and explain PID controller with suitable example. **[9]**

OR

Q2) a) Define error and explain reset windup, rate before reset, bumpless transfer in detail. **[9]**

b) Explain PI and PD controller in brief with suitable examples. **[9]**

Q3) a) Explain Ziegler Nichols close loop tuning method in detail. **[8]**

b) Derive an expression for digital PID position algorithm and state the limitation of position algorithm. **[9]**

OR

Q4) a) Explain process reaction curve tuning method in detail. **[8]**

b) Derive an expression for digital PID velocity algorithm and state the merit of velocity algorithm. **[9]**

Q5) a) Explain control valve characteristics with neat sketch in brief. **[9]**

b) Explain final control element in brief and explain gate and needle control valve in detail with neat sketch. **[9]**

P.T.O.

OR

Q6) a) Explain cavitation in brief and suggest the suitable method used to reduce it. **[9]**

b) What is the necessity of sizing in control valve, list the selection criteria's for control valve and explain **[9]**

i) Rangeability, ii) Valve Capacity,

iii) Valve stem, iv) Turndown ratio.

Q7) a) State the significance of volume boosters and explain volume booster in brief. **[8]**

b) What is the need of positioners, state its application, types and discuss effect of positioner on performance of control valve. **[9]**

OR

Q8) a) Enlist types of actuators, explain any one with neat sketch and state its advantages, disadvantages and applications. **[8]**

b) What is the significance of pressure boosters and elaborate pressure booster in brief. **[9]**

▽▽▽▽

Total No. of Questions : 8]

SEAT No. :

P636

[Total No. of Pages : 2

[5869]-259
S.E. (Instrumentation and Control)
SIGNALS AND SYSTEMS
(2019 Pattern) (Semester - IV) (206271)

Time : 2½ Hours] *[Max. Marks : 70*

Instructions to the candidates:

1) ***Solve Q.1 or Q.2, Q.3 or Q.4, Q.5 or Q.6, Q.7 or Q.8.***
2) ***Neat diagrams must be drawn wherever necessary.***
3) ***Figures to the right indicate full marks.***
4) ***Use of calculator is allowed.***
5) ***Assume suitable data if necessary.***

Q1) a) Obtain the Fourier Series of the periodic signal $x(t)$ shown in following figure. **[10]**

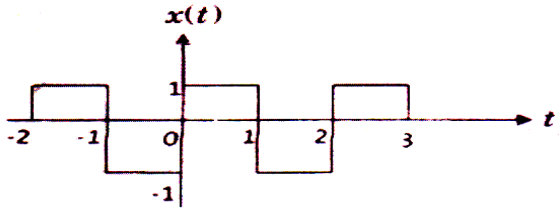

b) Give the Dirichlet conditions for Continuous time Fourier Series. Find the Fourier Series Coefficients of signal $x(t) = \sin(\omega_0 t)$. **[8]**

OR

Q2) a) List out the properties of Continuous time Fourier Series. Prove the time reversal property. **[10]**

b) Find the Fourier Series Coefficients of Signal $x(t) = 1 + \sin(\omega_0 t) + 2\cos(\omega_0 t)$. **[8]**

Q3) a) Determine the Fourier transform of the following continuous time signals. **[10]**

i) $x(t) = e^{-at}\, u(t)$

ii) $x(t) = \sin(\omega_0 t)$

b) Define Continuous time Fourier Transform and Inverse Continuous time Fourier Transform. Also find the Fourier Transform of Shifted Impulse function. **[7]**

OR

P.T.O.

Q4) a) A system has transfer function $H(\omega) = \frac{1+j\omega}{(2+j\omega)(3+j\omega)}$. Find the response of system for input $x(t) = e^{-2t}\,u(t)$ using Fourier Transform. **[10]**

b) List out the properties of Continuous time Fourier Transform. Prove the Linearity property. **[7]**

Q5) a) Determine $x(t)$ if $X(s) = \frac{s+2}{(s+3)(s+4)}$ with **[10]**

i) $Re(s) < -4$

ii) $Re(s) > -3$

b) Find the Laplace Transform and ROC of Unit Step function and Unit Ramp function. **[8]**

OR

Q6) a) Find the Laplace Transform of following signals. **[10]**

i) $x(t) = 3 - 2e^{-4t}$

ii) $x(t) = 5\cos(\omega t) + 4\sin(\omega t)$

b) Define the Region of Convergence (ROC) of Laplace Transform. Explain the considerations of system stability in S-domain. **[8]**

Q7) a) Define the following terms. **[10]**

i) Statistical Average

ii) Mean

iii) Standard Deviation

iv) Variance

v) Moment about origin

b) List the properties of probability. Explain the conditional probability with an example. **[7]**

OR

Q8) a) Find the mean, variance and standard deviation of the random variable. **[10]**

$$f(x) = \begin{cases} \frac{x^2}{3}; 0 < x < 3 \\ 0 \quad ; otherwise \end{cases}$$

b) State and explain the properties of CDF. **[7]**

❄ ❄ ❄

Total No. of Questions : 8]

SEAT No. : ____

P637

[Total No. of Pages : 3

[5869]-260

S.E. (Instrumentation and Control)

DATA STRUCTURES

(2019 Pattern) (Semester - IV) (206272)

Time : 2½ Hours] ***[Max. Marks : 70***

Instructions to the candidates:

1) ***Solve Q1 or Q2, Q3 or Q4, Q5 or Q6, Q7 or Q8.***
2) ***Figures to the right side indicate full marks.***
3) ***Neat diagrams must be drawn whenever necessary.***
4) ***Use of Calculator is allowed.***
5) ***Assume Suitable data if necessary.***

Q1) a) Write down the functions used to perform the below mentioned operations on list: **[12]**

i) Number of elements in the list

ii) Remove object from a list

iii) Add elements of second list in first list

iv) Print a section of the list

v) Find minimum value in list

vi) Find maximum value in list

b) What is output of **[6]**

i)
```
import numpy as np
arr = np.array ([[1, 2, 3, 4, 5], [6, 7, 8, 9, 10]])
print (arr[1, 1 : 4])
```

ii)
```
import numpy as np
arr = np.array ([1, 2, 3, 4, 5, 6, 7])
print(arr[1 : 5])
```

OR

P.T.O.

Q2) a) Explain following operations of list with example: **[8]**

Append, extend, insert, remove

b) Write a Python program to append a new item to the end of the array. **[4]**

c) What is output of **[6]**

i) 13 = [34]

14 = [1]

print(13 + 14)

ii) 15 = [2, 3, 4, 5]

print(15*2)

Q3) a) What are the advantages and disadvantages of Abstract Data Type? **[4]**

b) List the types of Abstract Data Type and explain them in brief. **[8]**

c) def myfunc(a, b): **[3]**

return a + b

print (list(map(myfunc, (‘apple’, ‘banana’, ‘cherry’), (‘orange’, ‘lemon’, ‘pineapple’))))

What is output of the above Python program?

d) Write a short note on SET Abstract Data Type. **[2]**

OR

Q4) a) What are the mathematical operations that can be performed on SET Abstract Data Type? **[8]**

b) What is the difference between append( ) and extend( ) functions when used in Multidimensional Arrays? **[4]**

c) a = [[2, 4, 6, 8, 10], [3, 6, 9, 12 ,15], [4, 8, 12, 16, 20]] **[5]**

a[2].reverse( )

print(a)

What is output of the above Python program?

Q5) a) Explain traversing the nodes in linked list with neat diagram. **[8]**

b) Compare python list and linked lists. **[4]**

c) Explain linked list sorting with example. **[6]**

OR

Q6) a) Write functions for (i) adding new item, (ii) Removing item (iii) To check if item is in Bag (iv) For making current node as head in Bag ADT. **[8]**

b) Explain how nodes can be remove in tail reference using example. **[4]**

c) Explain how nodes are created, added and linked. **[6]**

Q7) a) Elaborate the Postfix evaluation algorithm stepwise. **[9]**

b) Describe the implementation of queue using a Circular Array. **[8]**

OR

Q8) a) Convert the following expression from Infix to Postfix expression. **[9]**

(A + B) * (C – D)

b) How the Queue ADT is implemented using a Python list. **[8]**



Total No. of Questions : 09]

SEAT No. : ____

P638

[Total No. of Pages : 4

[5869]-261
S.E. (Chemical)
ENGINEERING MATHEMATICS - III
(2019 Pattern) (Semester - III) (207004)

Time : 2½ Hours] ***[Max. Marks : 70***

Instructions to the candidates:

1) ***Questions No. 1 is compulsory.***
2) ***Attempt Q.2 or Q.3, Q.4 or Q.5, Q.6 or Q.7 and Q.8 or Q.9.***
3) ***Assume suitable data if necessary.***
4) ***Neat diagrams must be drawn wherever necessary.***
5) ***Figures to the right indicates full marks.***
6) ***Use of electronic pocket calculator is allowed.***

Q1) i) The Fourier transform F(λ) of function $f(x)$ defined in the interval $-\infty < x < \infty$ is **[1]**

a) $\int_{-\infty}^{\infty} f(u)e^{iu}du$ b) $\int_{-\infty}^{\infty} f(u)e^{-\lambda u}du$

c) $\int_{-\infty}^{\infty} f(u)e^{-i\lambda u}du$ d) $\int_{0}^{\infty} f(u)e^{-i\lambda u}du$

ii) For a distribution coefficient of kurtosis $\beta_2 = 2.5$, this distribution is **[1]**

a) Leptokurtic b) Mesokurtic

c) Platykurtic d) None of these

iii) The mean and variance of Binomial probability distribution are 6 and 4 respectively. Number of trials n is given by **[2]**

a) 14 b) 10

c) 12 d) 18

iv) $\nabla^2 f(r)$ is equal to **[2]**

a) $f''(r)$ b) $f''(r)\frac{\overline{r}}{r}$

c) $f''(r)+\frac{2}{r}f'(r)$ d) $f''(r)+\frac{3}{r}f'(r)$

P.T.O.

v) The Fourier cosine transform $F_c(\lambda)$ of $f(x)=\begin{cases}1 & ,\ 0<x<1\\ 0 & ,\ x>\end{cases}$ is **[2]**

a) $\frac{\cos\lambda}{\lambda}$ b) $\frac{\sin\lambda}{\lambda}$

c) $\frac{\cos 2\lambda}{\lambda}$ d) $\frac{\sin 2\lambda}{\lambda}$

vi) The partial differential equation of wave equation is given by **[2]**

a) $\frac{\partial u}{\partial t}=k\frac{\partial^2 u}{\partial x^2}$ b) $\frac{\partial^2 u}{\partial x^2}+\frac{\partial^2 u}{\partial y^2}=0$

c) $\frac{\partial^2 u}{\partial t^2}=c^2\frac{\partial^2 u}{\partial x^2}$ d) $\frac{\partial^2 u}{\partial x^2}-\frac{\partial^2 u}{\partial y^2}=0$

Q2) a) Find the Fourier integral representation of the function $f(x)=\begin{cases}1 & ,|x|<1\\ 0 & ,|x|>1\end{cases}$. **[5]**

b) By considering the Fourier sine integral of e^{-mx} (m>0), prove that $\int_0^\infty \frac{\lambda\sin\lambda x}{\lambda^2+m^2}d\lambda=\frac{\pi}{2}e^{-mx}, m>0, x>0$. **[5]**

c) Solve the integral equation $\int_0^\infty f(x).\cos\lambda x dx=e^{-\lambda}\quad ,\lambda>0$. **[5]**

OR

Q3) a) Find the Fourier cosine transform of $f(x) = e^{-2x}$, $x > 0$. **[5]**

b) Solve the integral equation $\int_0^\infty f(x)\sin\lambda x\,dx=\begin{cases}1-\lambda & ,0\le\lambda\le 1\\ 0 & ,\ \lambda>1\end{cases}$. **[5]**

c) Using Fourier integral representation show that $\int_0^\infty \frac{1-\cos\pi\lambda}{\lambda}\sin\lambda x d\lambda=\begin{cases}\frac{\pi}{2} & ,0<x<\pi\\ 0 & ,\ x>\pi\end{cases}$. **[5]**

Q4) a) The first four moments of a distribution about the value 4 are –1.5, 17, –30 and 108. Calculate the moments about the mean. Also find β_1 and β_2. **[5]**

b) In a Poisson distribution, if P(r = 1) = 2 P(r = 2), find P(r = 3). **[5]**

c) Ten coins thrown simultaneously. Find the probability of getting : **[5]**

i) 8 heads

ii) at least 6 heads

OR

Q5) a) Find the coefficient of correlation for the data n = 25, Σx_i = 100, Σy_i = 125, $\sum x_i^2 = 250, \sum y_i^2 = 500, \sum x_i y_i = 522$. **[5]**

b) In a male population of 1000, the mean height is 68.16 inches and standard deviation is 3.2 inches. How many men will be expected to be more than 72 inches (z = 1.2, Area = 0.3849). **[5]**

c) The mean and variance of Binomial distribution are 4 and 2 respectively. Find P($r \geq 2$). **[5]**

Q6) a) Find the value of m, if $\overline{F} = (x+2y)\hat{i} + (my+4z)\hat{j} + (5z+6x)\hat{k}$ is solenoidal. **[5]**

b) Find the directional derivative of $\Phi = xy^2 + yz^3$ at (2, –1, 1) along the line $2(x-2) = y+1 = z-1$. **[5]**

c) Show that $\iiint_v \frac{dv}{r^2} = \iint_s \frac{\overline{r}.\hat{n}}{r^2} ds$. **[5]**

OR

Q7) a) Prove that $\nabla^2 f(r) = f''(r) + \frac{2}{r} f'(r)$. **[5]**

b) Find the workdone in moving a particle once round the circle $x^2 + y^2 = 9$ in the XY - plane if the field of force is $\overline{F} = (2x-y-z)\hat{i} + (x+y-z^2)\hat{j} + (3x-2y+4z)\hat{k}$. **[5]**

c) Evaluate $\iint_s \nabla \times \overline{F}.d\overline{s}$ for $\overline{F} = y\hat{i} + z\hat{j} + x\hat{k}$ where s is the surface of the paraboloid $z = 1 - x^2 - y^2$, $z \geq 0$. **[5]**

Q8) a) The temperature at any point of the insulated metal rod of one meter length is governed by the equation $\frac{\partial u}{\partial t} = c^2 \frac{\partial^2 u}{\partial x^2}$

find $u(x, t)$ subject to the following conditions : **[7]**

i) $u(0, t) = 0$°C

ii) $u(1, t) = 0$°C

iii) $u(x, 0) = 50$°C, $0 < x < 1$

b) Solve $\frac{\partial^2 u}{\partial x^2} + \frac{\partial^2 u}{\partial y^2} = 0$ if **[8]**

i) $u(0, y) = 0, \forall y$

ii) $u(\pi, y) = 0, \forall y$

iii) $u(x, \infty) = 0$, for $0 < x < \pi$

iv) $u(x, 0) = u_0$, for $0 < x < \pi$

OR

Q9) a) If $\frac{\partial^2 u}{\partial t^2} = c^2 \frac{\partial^2 u}{\partial x^2}$, represents the vibrations of a string of length l fixed at both ends. Find the solution with boundary conditions : **[8]**

i) $u(0, t) = 0, \forall t$

ii) $u(l, t) = 0, \forall t$ and initial conditions.

iii) $\left(\frac{\partial u}{\partial t}\right)$ at $t = 0$ is 0

iv) $u(x, 0) = x, 0 \le x \le l$

b) Using Fourier sine transform solve the equation $\frac{\partial u}{\partial t} = \frac{\partial^2 u}{\partial x^2}, 0 < x < \infty, t > 0$ subject to the following conditions. **[7]**

i) $u(0, t) = 0, t > 0$

ii) $u(x, 0) = e^{-x}, x > 0$

iii) $u(x, t)$ is bounded.

⌘⌘⌘

Total No. of Questions : 8]

SEAT No. :

P980

[Total No. of Pages : 2

[5869] - 262

S.E. (Chemical)

INDUSTRIAL CHEMISTRY - I

(2019 Pattern) (Semester - III)

Time : 2½ Hours] ***[Max. Marks : 70***

Instructions to the candidates :

1) ***Answer Q. No. 1 or Q. No. 2, Q. No. 3 or Q. No. 4, Q. No. 5 or Q. No. 6, Q. No. 7 or Q. No. 8.***
2) ***Neat diagrms must be drawn wherever necessary.***
3) ***Figures to the right side indicate full marks.***

Q1) a) Explain the principle and application of TLC. **[6]**

b) State and derive Lambert and Beer's law. **[6]**

c) Explain the important components of gas chromatography. **[6]**

OR

Q2) a) Explain the principle, technique and application of column chromatography. **[6]**

b) Explain the applications of IR spectroscopy. **[6]**

c) Explain any two detectors used in gas chromatography. **[6]**

Q3) a) Derive the thermodynamic equation for depression in freezing point of solution. **[6]**

b) Explain Berkeley and Hartley method for measurement of osmotic pressure. **[6]**

c) A solution of 3.0 × 10–4 kg of camphor [C10H160] in 25.3 × 10–3 kg of chloroform boils at 334.3 K. Boilingpoint of chloroform is 334 K. Calculate - Hvap and Kb forchloroform **[5]**

OR

Q4) a) Derive the equation for elevation in boiling point and show it is colligative properties. **[6]**

b) Define and explain Henry and Raoult's law. **[6]**

c) 1.51 gm NaCl in 500 gm of water (Kb = 0.51 K/molar) elevated boiling point of water by 0.05°C. Calculate the apparent molar mass, Van't Hoff factor and degree of dissociation of NaCl. **[5]**

P.T.O.

Q5) a) Discuss the mechanism of E1 and E2 reaction of alkyl halides. **[6]**

b) Write short notes on : **[6]**

i) Claisen Rearrangement.

ii) Beckman rearrangement.

c) Give the mechanism of nitration of benzene. **[6]**

OR

Q6) a) What are the effects of the following factors on SN1 and SN2 reactions? **[6]**

i) Nature of solvent

ii) Nature of leaving group

iii) Nature of nucleophile

b) Give mechanism of Friedel-Crafts alkylation and give its merits. **[6]**

c) Write a short note on Saytzeff rule. **[6]**

Q7) a) Write a short note on diazotisation and coupling in azo dyes. **[6]**

b) Explain any two methods of synthesis **[6]**

i) Pyrrole

ii) Pyridine

c) Give synthesis of the following dyes : **[5]**

i) Crystal violet.

ii) Methyl orange.

OR

Q8) a) Give classification of dyes on the basis of application. **[6]**

b) Explain any three methods for synthesis of Furan. **[6]**

c) Give synthesis of the following dyes : **[5]**

i) phenolphthalein.

ii) alizarin

▽▽▽▽

Total No. of Questions : 8]

SEAT No. : ____

P981

[Total No. of Pages : 2

[5869]-263
S.E. (CHEMICAL)
FLUID MECHANICS
(2019 Pattern) (Semester - III)

Time : 2½ Hours] **[Max. Marks : 70**

Instructions to the candidates :

1) ***Answer Q1 or Q2, Q3 or Q4, Q5 or Q6, Q7 or Q8.***
2) ***Neat diagrams must be drawn whenever necessary.***
3) ***Figures to the right side indicate full marks.***
4) ***Assume suitable data, if necessary.***
5) ***Use of calculator is allowed.***

Q1) a) Draw a neat sketch and explain the working principle of orifice meter derives equation. **[6]**

b) Derive Euler's equation of motion. **[6]**

c) A 200mm × 100mm venturimeter is provide in a vertical pipe carrying water flowing in the upwards direction a differential mercury manometer connected to the inlet and throat gives a reading of 220 mm find the rate of flow assume Cd=0.98. **[6]**

OR

Q2) a) Derive expression for Pitot tube and explain the working principle. **[6]**

b) Define Bernoulli's equation with assumptions. **[6]**

c) An orifice meter with orifice diameter 15cm is inserted in a pipe of 30cm diameter the pressure difference measured by a mercury oil differential manometer on the two sides of the orifice meter gives a reading of 50 cm of mercury. Find the rate of flow of oil of sp.gr 0.9 when the coefficient of discharge of the meter = 0.64. **[6]**

Q3) a) Derive "Darcy Weisbach" equation to find head loss due to friction? **[6]**

b) Derive the relation between the maximum and average velocities along with their position in the cross section of, circular horizontal pipe. **[6]**

c) An oil of viscosity 0.1 Ns/m^2 and relative density 0.9 is flowing through a circular pipe of diameter 50mm and of length 300m. The rate of flow of fluid through the pipe is 0.35 liters/s. Find the pressure drop in a length of 300m. **[6]**

P.T.O.

OR

Q4) a) Derive Hagen-Poiseuille Equation, highlighting the assumptions made. **[6]**

b) Prove that expression for laminar flow of fluid. **[6]**

c) A fluid of viscosity 0.7 Ns/m^2 and specific gravity 1.3 is flowing through a circular of diameter 100mm. The maximum shear stress at the pipe wall is given as 196.2 N/m^2. **[6]**

Find : i) Pressure gradient

ii) Average velocity

iii) Reynolds no of the flow

Q5) a) Explain Buckingham's π-theorem in detail. **[6]**

b) Explain the concept of boundary layer? **[6]**

c) The efficiency 'η'of a fan depends on the density 'ρ' the dynamic viscosity 'μ' of the fluid, the angular velocity 'ω', diameter 'D' of the rotor and the discharge 'Q'. Express 'η' in terms of dimensionless parameter. **[6]**

OR

Q6) a) With suitable example's describe in detail the Rayleigh's Method of dimensional analysis? **[6]**

b) Explain the term dimensional homogeneous equation? With suitable example. **[6]**

c) The pressure difference 'Δp' in a pipe of diameter 'D' and length 'L' due to viscous flow depends on the velocity 'V', viscosity 'μ' and density 'ρ'. Using Buckingham's π-theorem obtain an expression for ΔP. **[6]**

Q7) a) Explain phenomenon of cavitation's in centrifugal pumps. How it can be prevented? **[6]**

b) Explain fluidization with its type and application? **[5]**

c) Explain value and its type with application? **[5]**

OR

Q8) a) Explain operating characteristic of centrifugal pump? **[6]**

b) Differentiate between particulate fluidization and aggregative fluidization. **[5]**

c) Explain the concept of minimum fluidization. **[5]**

Total No. of Questions : 8]

SEAT No. : ____

P3804

[Total No. of Pages : 2

[5869]-264

S.E. (Chemical)

ENGINEERING MATERIALS

(2019 Pattern) (Semester - III) (209343)

Time : 2½ Hours] ***[Max. Marks : 70***

Instructions to the candidates:

1) ***Neat diagrams must be drawn wherever necessary.***
2) ***Use of logarithmic tables slide rule, Mollier charts and electronic pocket calculator and steam tables are allowed.***
3) ***Assume suitable data, if necessary.***

Q1) a) Explain in detail Ultrasonic flow inspection test for testing of Engineering materials. **[9]**

b) Write down the Applications of Nanomaterials in chemical industry. **[9]**

OR

Q2) a) Write the difference between destructive and non-destructive hardness test. **[9]**

b) What is Nanotechnology? Explain the applications of Nanomaterials in chemical Industry. **[9]**

Q3) a) Draw Iron-Iron carbide equilibrium diagram. **[9]**

b) Explain various phases observed in Iron-Iron carbide equilibrium diagram. **[8]**

OR

Q4) a) Write the difference between destructive and non-destructive hardness test. **[9]**

b) Write down the Applications of Nanomaterials in chemical industry. **[8]**

Q5) Explain principle and working of Transmission Electron Microscope (SEM). **[18]**

OR

Q6) Explain principle and working of Scanning Tunneling microscopy (STM).**[18]**

P.T.O.

Q7) a) Define ceramic materials. Write applications of ceramic materials. **[9]**

b) Explain the different mechanical properties of Ceramics. **[8]**

OR

Q8) a) Write a short note on Organic Protective Coatings? **[9]**

b) Write a short note on Glass and its types. **[8]**

▽▽▽▽

Total No. of Questions : 8]

SEAT No. :

P982

[Total No. of Pages : 4

[5869]-265

S.E. (Chemical)

PROCESS CALCULATIONS

(2019 Pattern) (Semester - III) (209344)

Time : 2½ Hours] ***[Max. Marks : 70***

Instructions to the candidates :

1) ***Solve Q.1 or Q.2, Q.3 or Q.4, Q.5 or Q.6, Q.7 or Q.8.***
2) ***Neat diagrams must be drawn wherever necessary.***
3) ***Figures to the right indicate full marks.***
4) ***Use of logarithmic tables, slide rule, Mollier charts, electronic pocket calculator and steam table is allowed.***
5) ***Assume suitable data, if necessary.***

Q1) a) A coke is known to contain 90% carbon and 10% non-combustible ash (by weight): (i) Find the moles of oxygen theoretically required to burn 100 kg of coke completely? (ii) If 50% excess air is supplied, calculate the analysis of gases at the end of combustion. **[8]**

b) In the production of sulphur trioxide, 100 kmol of SO_2 and 200 kmol O_2 are fed to reactor. The product stream is found to contain 80 kmol os SO_3. Find the percentage conversion of SO_2. **[8]**

OR

Q2) a) Gaseous benzene reacts with hydrogen in the presence of Ni catalyst as per the reaction:

$$C_6H_6\ (g) + 3H_2\ (g) \rightarrow C_6H_{12}(g)$$

30% excess hydrogen is used above that required by the above reaction. Conversion is 50% and yield is 90%. Calculate the requirement of the benzene and hydrogen gas for 100 moles of cyclohexane produced. **[8]**

P.T.O.

b) A gas containing 25% CO, 5% CO_2, 2% O_2 and rest N_2 is burnt with 20% excess air. If the combustion is 80% complete, calculate the composition by volume of the flue gases considering the given compositions of gas to be on mole basis. **[8]**

Q3) a) A stream of carbon dioxide flowing at a rate of 100 kmol/min is heated from 298 K to 383 K. Calculate the heat that must be transferred using C_p data: **[10]**

$C_p^0 = a + bT + cT^2 + dT^3$, kJ/kmol.K

Gas	a	b x 10^3	c x 10^6	d x 10^9
CO_2	21.3655	64.2841	-41.0506	9.7999

b) Calculate the heat of reaction at 298.15 K of the following reaction:

C_2H_6 (g) $\rightarrow C_2H_4$ (g) + H_2(g) **[8]**

Data

Component	ΔH_c^0 kJ/mol
C_2H_6 (g)	-1560.69
C_2H_4 (g)	-1411.2
H_2(g)	-285.83

OR

Q4) a) Calculate the standard heat of reaction of the following reaction: **[10]**

C_5H_{12} (1) + 8 O_2 (g) $\rightarrow$ 5 CO_2 (g) + 6H_2O (1)

Data

Component	ΔH_f^0 kJ/mol at 298.15 K
C_5H_{12} (1)	-173.49
CO_2(g)	-393.51
H_2O (1)	-285.83

b) Calculate the heat of formation of ethane gas at 298.15 K from its elements using Hess's law: **[8]**

Data :

Heat of formation of CO_2 (g) = - 393.51 kJ/mol

Heat of formation of H_2O (1) = - 285.83 kJ/mol

Heat of combustion of ethane gas at 298.15 K = -1560.69 kJ/mol

Q5) a) Define relative humidity and percentage humidity, and derive a relation between them. **[8]**

b) SO_2 is absorbed in water using a packed column operated at constant T and P. The gases entering the tower contain 14.8% SO_2 by volume. Water is distributed from the top of the column at the rate of 16.51/s. The volume of the gas handled at 101.325 kPa at 303 K is 1425 m^3/hr. The gases leaving the tower contain 1% SO_2 by volume. Find the % SO_2 in the outlet water (by weight) **[10]**

OR

Q6) A multiple-contact counter-current extractor is employed to extract oil from halibut livers with the help of ethyl ether. The fresh livers are charged to the extractor at the rate of 1000 kg/h and contain 25.7% oil (by mass). Pure ether enters to the bottom of the extractor. The overflow from the extractor contains 70% oil (by mass). The underflow rate is 0.23 kg solution/kg of oil-free solids and is known to contain 12.8 % oil (by mass). Based on these operating conditions, make the complete material balance and find the flow rate of ether to the extractor. Also compute the percentage recovery of oil. **[18]**

Q7) a) Explain the following: **[6]**

(i) Classification of fuels

(ii) Calorific values of fuels

b) Fuel gas has the following composition: CO = 27%, CO_2 = 4%, O_2 = 0.5% and N_2 = 68.5% by volume. Find the net theoretical oxygen required. Find the analysis of flue gas if the fuel gas is burned with 80% excess air than the net requirement. **[6]**

c) Define adiabatic flame temperature, HCV and NCV. Is the actual adiabatic flame temperature different than that calculated theoretically? **[6]**

OR

Q8) Synthetic natural gas has the following composition: **[18]**
CH_4 = 95%, H_2 = 1.0%, CO_2 = 2% and CO = 2% (by mole).
This gas is used to generate steam at 101.325 kPa.
Find the quantity of steam generated per kg of the gas fired if the boiler has efficiency of 75%.

Data: At 101.325 kPa, H of steam = 2676 kJ/kg.

GCV of CH_4 = 890.65 kJ/mol.

NCV of CH_4 = 802.62 kJ/mol.

ΔH_f^0 CO_2 = -393.51 kJ/mol.

ΔH_f^0 CO = - 110.53 kJ/mol.

ΔH_f^0 H_2O (1) = - 285.83 kJ/mol.

Latent heat of water vapour at 298.15 K = 2442.5 kJ/kg.



Total No. of Questions : 8]

SEAT No. : ____

P640

[Total No. of Pages : 2

[5869]-266
S.E. (Chemical Engineering)
INDUSTRIAL CHEMISTRY - II
(2019 Pattern) (Semester - IV)

Time : 2½ Hours] ***[Max. Marks : 70***

Instructions to the candidates:

1) ***Attempt Q.No.1 or Q.No.2, Q.No.3 or Q.No.4, Q.No.5 or Q.No.6, Q.No.7 or Q.No.8***
2) ***Figures to the right indicate full marks***
3) ***Assume suitable data, if necessary.***
4) ***Neat diagrams must be drawn wherever necessary.***

Q1) a) Explain Titration curve for 0.5 N HCL and 0.5N NaOH. Which indicator can be used for this titration? **[6]**

b) What is meant by Precipitation Titration? Explain Mohr's mehtod for determination of CI^{-} ions. **[6]**

c) Calculate Molarity and Normality of solution containing 0.5 gm NaOH dissolved in 500ml solution. **[6]**

OR

Q2) a) Explain in details Fajans method for precipitaion titration. **[6]**

b) How is the pH of titration mixture claculated at various stages druing strong acidweak base titration. **[6]**

c) Calculate the weight of KMnO4 required making 500 ml of 0.1 N KMnO4 solutions, for titration in acidic medium. **[6]**

Q3) a) What is an adsorption isotherm? Explain the Freundlich isotherm. **[6]**

b) Explian "adsorption theory" of catalysis. **[6]**

c) Give mechanism of metal co-ordination compound catalysed reactions Wacker process. **[5]**

OR

Q4) a) What is an adsorption isotherm? Explain the Langmuir isotherm. **[6]**

b) What are the assumption of BET theory of adsorption? Give equation of BET adsorption isotherm and explain the meaning of terms in it. **[6]**

c) Give mechanism of metal co-ordination compound catalysed reactions photolysis of water. **[5]**

P.T.O.

Q5) a) Discuss various conformations of n-butane. **[6]**

b) Show with the help of potential energy diagram staggered conformations more favoured over eclipsed conformation of propane. **[6]**

c) Define the terms **[6]**

i) Enantiomer

ii) Diastereomer

iii) Racemisation

OR

Q6) a) Explain geometrical isomerism with an example **[6]**

b) Explain optical isomerism in details **[6]**

c) Assign R and S conformation in 2-Bromo butane and Lactic acid **[6]**

Q7) a) Deduce the equation of maximum work done in terms of volume and in terms of pressure. **[6]**

b) What is bond energy, give different types of bond energies **[6]**

c) A piston filled with 0.04 mol of an ideal gas expands reversibly from 50.0 mL to 375 mL at a constant temperature of 37.0º C. As it does so, it absorbs 208J of heat. The values of w for the process will be. **[5]**

OR

Q8) a) Explain the spontaneity by using Gibbs free energy. **[6]**

b) Derive the relation between heat of reaction at constant pressure and at constant volume mentioned the three case of it. **[6]**

c) A gas expands isothermally against a constant external pressure of 1 atmosphere from a volume of 10 dm^3 to a volume of 20 dm^3. In this process it absorbs 800 J of thermal energy from its surroundings. Find the ΔU for the process in joule. **[5]**



Total No. of Questions : 8]

SEAT No. :

P641

[Total No. of Pages : 4

[5869]-267
S.E. (Chemical)
HEAT TRANSFER
(2019 Pattern) (Semester - IV)

Time : 2½ Hours] *[Max. Marks : 70*

Instructions to the candidates:

1) ***Answer Q.1 or Q.2, Q.3 or Q.4, Q.5 or Q.6, Q.7 or Q.8.***
2) ***Neat diagrams must be drawn wherever necessary.***
3) ***Figures to the right indicate full marks.***
4) ***Assume suitable data if necessary.***

Q1) a) Calculate the rate of heat loss from a thermoflask if the polished silver surfaces have emissivities of 0.05, the liquid in the flask is at 368K and the casing is at 293K. Also calculate the rate of heat loss if the said surfaces were perfectly black. **[6]**

Stefan - Boltzmann constant = 5.67×10^{-8}w/($m^2.K^4$)

b) Define monochromatic emissive power and monochromatic emissivity. **[4]**

c) What is Radiation? Explain black body? **[4]**

d) Explain any TWO **[4]**

i) Specular and Diffuse Reflection

ii) Emissivity

iii) Radiation Shield

OR

Q2) a) Determine the net radiant interchange between two parallel oxidized iron plates, placed at a distance of 25 mm having sides 3*3 m. The surface temperatures of two plates are 373 K and 313K respectively. Emissivities of the plates are equal. Given $e_1=e_2 = 0.736$. **[8]**

b) Write Short notes on the following any two **[10]**

i) Irradiation

P.T.O.

ii) Concept of Black Body

iii) Kirchoff's Law

Q3) a) Explain: **[9]**

i) Thermal Boundary Layer

ii) Overall Heat Transfer Coefficient

b) Air at temperature of 250 °C flows over a flat plate 0.3 m wide and 1m long at a velocity of 8 m/s. If the plate is to be maintained at 80°C, Calculate the rate of heat transferred to both sides of the plate.

Data:

Properties of air at mean temperature 165°C

Kinematic Viscosity : $3.9\times10^{-4}\,m^2/s$

Thermal Conductivity : 0.0364 W/m.K

Prandtl No. : 0.69 **[8]**

OR

Q4) a) Distinguish between Filmwise and Dropwise Condensation. **[6]**

b) Explain Film boiling **[5]**

c) Water at 80°C is flowing at a velocity of 3 m/s through a tube of 16 mm diameter maintained at constant wall temperature of 297K. If the exit temperature of water is 309K, determine the rate of heat transfer per meter length of tube.

Data:

Properties of water at mean bulk temperature,

Dynamic viscosity : $485\times10-6$ N.s/m2

Density : 984 kg/m3

Thermal Conductivity : 0.657 W/m.K

Specific heat : 4187 J/kg. K **[6]**

Q5) a) Derive an expression for heat exchanger effectiveness for concurrent flow. **[9]**

b) In an oil cooler, 60g/s of hot oil enters a thin metal pipe of diameter 25mm. An equal mass of cooling water flows through the annular space between the pipe and a large concentric pipe, the oil and water moving in opposite directions. The oil enters at 420 K and is to be cooled to 320 K. If water enters at 290 K, what length of pipe is required? Take Overall heat transfer coefficient U = 1108 W/(m^2K). Specific heat of oil is 2.0 KJ/(KgK) and that of water is 4.18 KJ/(KgK). **[9]**

OR

Q6) a) Give detail classification of Heat Exchanger. Draw neat sketch of double pipe heat exchanger and Shell and Tube Heat Exchanger. **[9]**

b) A shell & tube heat exchanger is to be provided with tubes of 31 mm outer diameter & 27 mm inner diameter, 4 m long. It is required for heating water from 295 K to 318 K with the help of condensing steam at 393 K on the outside of tubes. Determine the number of tubes required if water flow rate is 10 kg/sec. Heat transfer coefficient on steam side & water side are 6000W/m^2 K & 850 W m^2 K respectively. Neglect all other resistances. **[9]**

Q7) a) Draw and explain the forward feed multiple effect evaporator. **[7]**

b) The evaporator operating at atmospheric pressure, is fed with 5000 Kg/hr of a solution at 303 K from 1% to 2% by weight of solute concentration. The area of evaporator is 69 m^2. Saturated Steam at 383K is supplied to the evaporator at pressure of 143.3 KPa as a heating medium. Calculate steam economy and overall heat transfer coefficient.

Date : Enthalpy of feed at 303K = 125.79kJ/kg

Enthalpy of vapor at 101.325Kpa = 2676.10kJ/kg

Enthalpy of saturated steam at 383K and 143.3KPa = 2691.50 kJ/kg

Boiling point of solution : 373K

Enthalpy of product = 419.04 kJ/kg

Enthalpy of saturated water at 383K = 461.30 kJ/kg **[10]**

OR

Q8) a) Give types of evaporators and write on Calendria type evaporator with neat sketch. **[7]**

b) What is evaporation? Define Boiling point elevation and explain Duhring's rule in evaporation. **[7]**

c) Describe the different factors affecting the evaporation operation. **[3]**

Total No. of Questions : 8]

SEAT No. :

P642

[Total No. of Pages : 3

[5869] - 268

S.E. (Chemical Engineering)

PRINCIPLES OF DESIGN

(2019 Pattern) (Semester - IV) (209349)

Time : 2½ Hours] ***[Max. Marks : 70***

Instructions to the candidates :

1) ***Attempt Q. No. 1 or Q. No. 2; Q. No.3 or Q. No.4; Q. No.5 or Q. No.6; Q. No.7 or Q. No.8.***
2) ***Figures to the right indicate full marks.***
3) ***Draw neat figures wherever necessary.***
4) ***Use of scientific calculators is allowed.***
5) ***Assume suitable data wherever necessary.***

Q1) a) If shaft is subject to combined twisting & bending moment, derive the equation to determine the diameter of shaft. **[8]**

b) A solid circular shaft is subjected to a bending moment of 3000 N-m and torque of 10000 N-m. The shaft is made of 45C8 steel having ultimate tensile stress of 700 MPa and Ultimate shear stress 500 MPa. Assuming the FOS as 06. Determine the diameter of shaft. **[10]**

OR

Q2) a) Prove that, for square key, the permissible crushing stress is twice the permissible shearing stress. **[6]**

b) Design a cast iron protective type flange coupling to transmit 15 kW at 900 RPM from an electric motor to a compressor. The service factor may be assumed as 1.35.

The following permissible stresses may be used :

Shear stress for shaft, bolt and Key material is 40 MPa,

Crushing stresses for bolt and Key is 80 MPa,

Shear stress for cast iron is 8 MPa.

Draw the neat sketch of coupling. **[12]**

P.T.O.

Q3) a) Find the efficiency of following riveted joints :

i) Single riveted lap joint of 6 mm plates with 20 mm diameter rivets having a pitch of 50 mm.

ii) Double riveted joint of 6 mm plates with 20 mm diameter rivets having a pitch of 65 mm.

Assume :

Permissible tensile stress in plate is 120 MPa.

Permissible shearing stress in rivets is 90 MPa,

Permissible crushing stress in rivets is 180 MPa. **[10]**

b) Define welding. Classify welding joints. What are advantages of welded joints over riveted joints & how will you define strength of butt weld joint subjected to tensive force. **[7]**

OR

Q4) a) Prove that ratio $\frac{T_1}{T_2} = e^{\mu.\theta}$ of driving tensions for Flat belt derive along with proper sketch.

Were,

T_1 : is tension in tight side.

T_2 : is tension in slack side.

θ : is angle of contact between belt and pulley.

μ : is the coefficient of friction between belt and pulley. **[7]**

b) Two pulleys, one 450 mm diameter and other 200 mm diameter, on parallel shaft 1.95 m apart are connected by a crossed belt. Find the length of belt required and angle of contact between the belt and each pully.

What power can be transmitted by the belt when the larger pully rotates at 200 RPM, if maximum permissible tension in the belt is 1kN and the coefficient of friction between belt and pully is 0.25?

Also draw the sketch. **[10]**

Q5) a) Short note on Optimum proportions of a vessel. **[6]**

b) A pressure vessel having outer diameter 1.3 m and height 3.8 m is subjected to an internal pressure of 12 Kg/cm^2. If vessel is fabricated as class B vessel, joint efficiency is 85%, if the vessel is fabricated as class C vessel, with welded joint efficiency is 70% and 50% and if the vessel is provided with a strip all along the longitudinal joint, joint efficiency is 100%. Calculate the vessel thickness under these different conditions and find out how much is the % material saving by welding a strip along the longitudinal joint.

Allowable stress for the material is 1000 Kg/cm^2.

Corrosion allowance is 1 mm. **[12]**

OR

Q6) a) Calculate the thickness of a torispherical heads (100-6) and (80-10) elliptical head (2:1) and hemispherical head for a pressure vessel having design pressure 7 kg/cm^2. Diameter of vessel is 1.5 m and the permissible stress is 1250 kg/cm^2. Welded joint efficiency is 85%. Also, calculate percentage reduction in thickness achieved by using these heads. **[12]**

b) Define pressure vessel and explain design of pressure vessel subjected to external pressure. **[6]**

Q7) a) Write short note on Autofrettage of Monoblock Pressure vessels. **[7]**

b) Calculate the thickness of flanged torispherical head for a vessel having internal diameter 6000mm. Design pressure of vessel is 3.4 kg/cm^2, inside crown radius is 6000mm. Inside knuckle radius is 380mm.Permissible stress of material is 1190 kg/cm^2. Welded joint efficiency is 100%. **[10]**

OR

Q8) a) A Vertical vessel with a cylindrical shell and hemispherical heads is to be installed in a closed shed. Internal diameter of the vessel is 1800mm and its thickness is 12 mm. Tangent to tangent length of vessel is 10.5 m. The vessel contains a liquid of density 8000Kg/m^3. The vessel is filled to 75% of its capacity. Determine the total weight of the vessel and the longitudinal stress in the cylindrical shell above and below the support which is at the lower head to shell junction. Permissible stress of the material is 1040Kg/m^2, Density of material is 7800 Kg/m^3.Welded joint efficiency is 85%. **[12]**

b) Define Pressure vessel and give some industrial examples where these are used commonly. **[5]**

▽▽▽▽

Total No. of Questions : 8]

SEAT No. : ____

P983

[Total No. of Pages : 2

[5869]-269

S.E. (Chemical Engineering)
CHEMICAL TECHNOLOGY - I
(2019 Pattern) (Semester - IV) (209350)

Time : 2.½ Hours] ***[Max. Marks : 70***

Instructions to the candidates:

1) ***Attempt Q.1 or Q.2, Q.3 or Q.4, Q.5 or Q.6, and Q.7 or Q.8.***
2) ***Neat diagrams must be drawn wherever necessary.***
3) ***Figures to the right indicate full marks.***
4) ***Use of electronic pocket calculator is allowed.***
5) ***Use of cell phone/Mobile phone is prohibited in the examination hall.***

Q1) a) Which raw materials are used for manufacture of nitrogeneous fertilizers produced from Ammonia. **[5]**

b) Explain Ammonia synthesis converter with a neat figure. **[5]**

c) Explain in brief stengel process for manufacture of Ammonium nitrate with a simplified flow chart. **[7]**

OR

Q2) a) Explain reactions & energy changes as of major importance in manufacture of nitric acid. **[5]**

b) Explain in brief process of manufacture of urea from ammonium carbamate with process flow diagram. **[8]**

c) Describe in brief market and sales for urea in India and in manufacture of industrial chemicals_____. **[4]**

Q3) a) Draw process flow diagram of a continuous process for the production of fatty acids and soap_____. **[6]**

b) Explain in brief main classes of soaps. **[4]**

c) Explain in brief sulfation of fatty alcohols & ALKYL-Aryl sulfonates. **[8]**

OR

Q4) a) Explain in brief use of raw materials in manufacture of soap. **[4]**

b) Explain in brief methods for manufacture of detergent and unit operations, unit processes involved. **[8]**

c) Describe in brief Bio-Degradable detergents. **[6]**

OR

P.T.O.

Q5) a) State main commodity polymers with uses. **[6]**

b) Explain reactions involved in manufacture of PVC & vinyl copolymers. **[6]**

c) Distinguish between thermosetting & thermoplastic resins. **[5]**

OR

Q6) a) Explain in brief poly urethanes. **[6]**

b) Draw a flow chart for manufacture of polyvinyl resin. **[6]**

c) Explain in brief reactions involved in Phenol-Formaldehyde. **[5]**

Q7) a) Explain in brief exploration methods in production of crude petroleum. **[4]**

b) Describe in brief unit operations and unit processes involved in refinery processes of crude oil. **[8]**

c) Explain in brief reactions involved in manufacture of silicone rubbers with mechanisms. **[6]**

OR

Q8) a) Describe in brief process description of manufacture of Olefin by polymerization using phosphoric acid on solid carrier as catalyst. Also draw its process flow diagram. **[10]**

b) Explain uses of SBR. **[4]**

c) Define pyrolysis and cracking in petroleum refining process. **[4]**



Total No. of Questions : 8]

SEAT No. : ____

P643

[Total No. of Pages : 2

[5869]-270
S.E. (Chemical)
MECHANICAL OPERATIONS
(2019 Pattern) (Semester - IV) (209351)

Time : 2½ Hours] ***[Max. Marks : 70***

Instructions to the candidates:

1) ***Answer Q1 or Q2, Q3 or Q4, Q5 or Q6, Q7 or Q8.***
2) ***Neat diagrams must be drawn wherever necessary.***
3) ***Figures to the right side indicate full marks.***
4) ***Assume suitable data if necessary.***

Q1) a) Write and explanatory note on **[12]**

i) Cyclone separator

ii) Electrostatic separator

b) Write notes on Terminal Settling, hindered settling and drag force on spherical particles **[6]**

OR

Q2) Draw a neat sketch of Pressure drop and bed height vs. superficial velocity for a bed of solids and explain in detail conditions of fluidization. **[18]**

Q3) Explain and derive the necessary equations for **[17]**

i) Flow number

ii) Power number

OR

Q4) a) What are turbines? Explain with a neat sketch different types of turbines **[8]**

b) Write notes on : **[9]**

i) Flow pattern in baffled and un-baffled vessels

ii) Ribbon Blender

iii) Sigma Mixer

P.T.O.

Q5) a) Derive the rate filtration at **[12]**

i) Constant rate

ii) Constant pressure difference

b) State the various factors on which rate of filtration depends **[6]**

OR

Q6) a) Explain with a neat sketch rotary drum filter **[9]**

b) Explain with a neat sketch Sand filter **[9]**

Q7) a) Write an explanatory note on pneumatic conveyors **[9]**

b) Write an explanatory note on Bucket Elevators **[8]**

OR

Q8) a) Explain with a neat sketch screw conveyor **[8]**

b) Explain with a neat sketch following parts of belt conveyors **[9]**

i) Belts

ii) Belt idlers

iii) Belt arrangements

Total No. of Questions : 8]

SEAT No. :

P644

[Total No. of Pages : 4

[5869]-271
S.E. (Computer Engineering)
DISCRETE MATHEMATICS
(2019 Pattern) (Semester - III) (210241)

Time : 2½ Hours] ***[Max. Marks : 70***

Instructions to the candidates :

1) ***Solve Q1 or Q2, Q3 or Q4, Q5 or Q6, Q7 or Q8.***
2) ***Neat diagrams must be drawn wherever necessary.***
3) ***Assume suitable data if necessary.***
4) ***Figures to the right indicate full marks.***

Q1) a) A committee including 3 boys and 4 girls is to be formed from a group of 10 boys and 12 girls. How many different committees can be formed from the group? **[6]**

b) In a certain country, the car number plate is formed by 4 digits from the digits 1, 2, 3, 4, 5, 6, 7, 8 and 9 followed by 3 letters from the alphabet. How many number plates can be formed if neither the digits nor the letters are repeated? **[6]**

c) How many 4-letter words with or without meaning, can be formed out of the letters of the word, 'LOGARITHMS', if repetition of letters is not allowed? **[6]**

OR

Q2) a) From a group of 7 men and 6 women, five persons are to be selected to form a committee so that at least 3 men are there on the committee. In how many ways can it be done? **[6]**

b) How many 6-digit odd numbers greater than 6,00,000 can be formed from the digits 5,6,7,8,9, and 0 **[6]**

i) if repetition is allowed

ii) if repetition is not allowed

c) A box contains 4 red, 3 white and 2 blue balls. Three balls are drawn at random. Find out the number of ways of selecting the balls of different colours? **[6]**

P.T.O.

Q3) a) Show that the following graphs are isomorphic. **[7]**

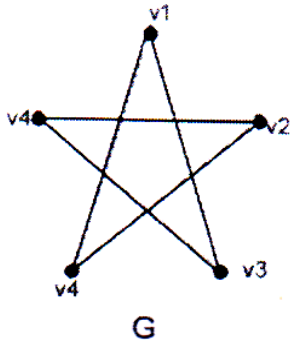

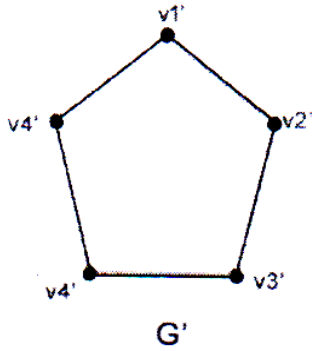

b) List and explain the necessary and sufficient conditions for Hamiltonian and eulerian path with suitable examples. **[5]**

c) Explain the terms adjacency matrix and incidence matrix. **[5]**

OR

Q4) a) Use dijkstras algorithm to find the shortest path between A and Z in figure. **[7]**

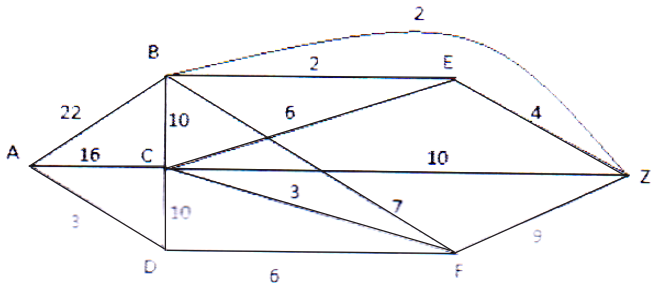

b) Show that in a connected planar graph with 6 vertices and 12 edges, each of the regions is bounded by 3 edges. **[5]**

c) Under what condition $K_{m,n}$ will have eulerian circuit. **[5]**

Q5) a) Define following terms **[6]**

i) Level of a tree

ii) Height of a tree

iii) Fundamental circuit

b) Use labeling procedure to find a maximum flow in the transport network given in the following figure. Determine the corresponding minimum cut. **[6]**

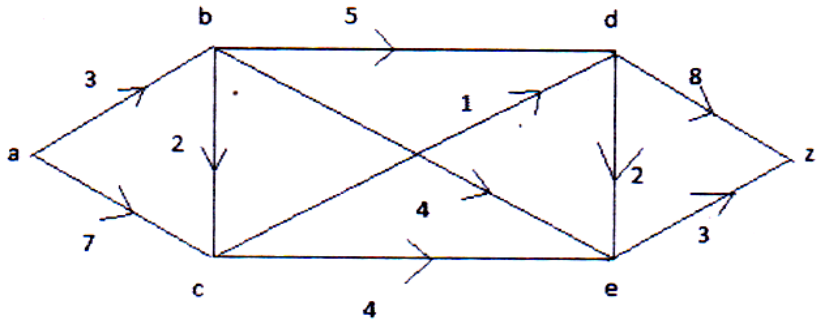

c) Construct Minimal spanning tree for the following graphs using prims algorithm. **[6]**

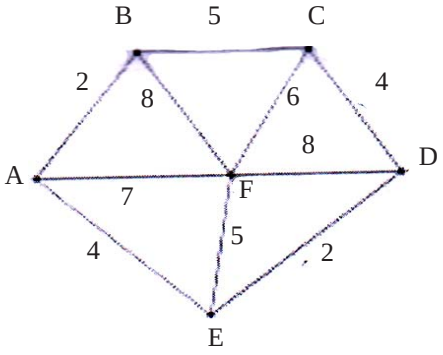

OR

Q6) a) Define following terms : **[6]**

i) Forest

ii) Fundamental cutsets

iii) Game tree

b) Construct Minimal spanning tree for the following graphs using kruskals algorithm **[6]**

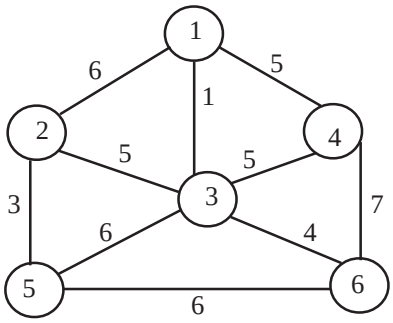

c) Construct an optimal tree for 8,9,10,11,13,15,22 using Huffman coding. **[6]**

Q7) a) Define : **[6]**

i) Semi-group

ii) Field

iii) Monoid

b) Let(A,*)be an algebraic system where * is a binary operation such that for any a,b, belongs to A , a*b=a **[6]**

i) show that * is an associative operation

ii) can *ever be a commutative operation?

c) Let (A,*) be a group, show that (A,*) is an abelian group iff $a^2 * b^2 = (a*b)^2$. **[5]**

OR

Q8) a) Define : **[6]**

i) Ring

ii) Ring Homomorphism

iii) Integral domain

b) Let $Z_n=\{0, 1, 2, ..., n-1\}$. Construct the multiplication table for n=6. Is (Zn, *) an abelian group. Where * is a binary operation on Z_n such that a*b = remainder of a*b divided by n. **[6]**

c) Prove that, the set Z of all integers with binary operation * defined by a*b = a + b + l such that for all a,b belonging to Z, is an abelian group.**[5]**

Total No. of Questions : 08]

SEAT No. :

P645

[Total No. of Pages : 2

[5869]-272
S.E. (Computer/AIDS) (Semester III)
FUNDAMENTALS OF DATA STRUCTURES
(2019 Pattern)

Time : 2½ Hours] *[Max. Marks : 70*

Instructions to the candidates:

1) ***Answer Q1 or Q2, Q3 or Q4, Q5 or Q6, Q7 or Q8 .***
2) ***Figures to the right indicate full marks***
3) ***Neat diagrams must be drawn whenever necessary.***
4) ***Make suitable assumption whenever necessary.***

Q1) a) Write an algorithm of Bubble sort & sort the following numbers using Bubble sort & show the contents of an array after Every pass. **[9]**

81, 5, 27, –6, 61, 93, 4, 8, 104, 15

b) Explain the radix sort . Sort the following numbers in ascending order. **[9]**

14, 1, 66, 74, 22, 36, 41, 59, 64, 54

Obtain the time & space complexity of your algorithm.

OR

Q2) a) Explain internal & external sorting by taking suitable example of each type. **[9]**

b) Write a short note on Fibonacci search with suitable example. **[9]**

Q3) a) Write pseudo C++ code for addition of two polynomials using singly linked list. **[9]**

b) What is dynamic data structure? Explain the circular linked list with its basic operations. **[9]**

OR

Q4) a) Write a pseudo code for the addition of a node after the position ‘P’ in singly linked list. **[9]**

b) Explain the doubly linked list with it’s basic operations; list the advantages of doubly linked list over singly linked list. **[9]**

P.T.O.

Q5) a) Write a pseudo code for basic operations of stock. **[8]**

b) What are the variants of recursion, explain with example. **[9]**

OR

Q6) a) Explain the linked implementation of stock with suitable example. **[8]**

b) Write pseudo code for infix to postfix expression; Explain the need of conversion of expression. **[9]**

Q7) a) Define the following terms with example **[8]**

i) Linear queue

ii) Circular queue

iii) priority queue

b) Write pseudo C++ code to implement linked queue. **[9]**

OR

Q8) a) Explain array implementation of priority queue with all basic operation. **[8]**

b) Write a pseudo C++ code to implement Circular queue using array. **[9]**



Total No. of Questions : 8]

SEAT No. : ____

P646

[Total No. of Pages : 2

[5869]-273

S.E. (Computer/Artificial Intelligence & Data Science)
OBJECT ORIENTED PROGRAMMING
(2019 Pattern) (Semester - III) (Theory) (210243)

Time : 2.½ Hours] ***[Max. Marks : 70***

Instructions to the candidates:

1) ***Attempt questions Q.1 or Q.2, Q.3 or Q.4, Q.5 or Q.6, Q.7 or Q.8.***
2) ***Draw neat and clean diagram.***
3) ***Assume suitable data, if Necessary.***

Q1) a) Differentiate between compile time polymorphism and runtime Polymophism. along with examples. **[5]**

b) Explain the use of mutual and explicit keywords in C++ language along with example. **[6]**

c) Write a program to demostrate for overloading decrement[--] Operator in C++. (Assume a class number with data member as int x) **[6]**

OR

Q2) a) Explain the concept of method/function overriding along with examples. What is operator overloading in polymorphism? Write the program to overload-operator for substracting two complex numbers which are object of below complex class by defining operator function in below. **[5]**

b) Class.

Class complex{

Private:int real, imag; }; **[6]**

c) What is virtual function and its use? How we can access virtual functions through the use of pointer to the base class. **[6]**

Q3) a) What are cin and cout? Explain iostream. **[4]**

b) Write a program that returns the size in bytes of a program entered on the command line. **[6]**

c) What is a stream? Write a program to illustrate the stream errors. **[8]**

OR

P.T.O.

Q4) a) What is a file mode? Describe the various file mode options available. **[4]**

b) Write a program to create files using constructor function. **[6]**

c) Write a program using C++ file input and output class with open(), get(), close () for opening, reading from and writing to a file. **[8]**

Q5) a) What is need of exception handling? Explain types of exception. **[4]**

b) What is template? Write a program to handle addition of two numbers. **[6]**

c) List and explain four common examples of exceptions. **[7]**

OR

Q6) a) What is difference between class template and function template in C++? **[4]**

b) Write a function template for finding the minimum value contained in an array **[6]**

c) What are user-defined exceptions? Explain with suitable example? **[7]**

Q7) a) List and explain different types of iterators in STL. **[4]**

b) What is Stack? How is it implemented in STL. **[6]**

c) Use minimum 8 functions of Deque STL. Write a program to explain the same. **[8**

OR

Q8) a) Elaborate Advantages and Disadvantages of LIST Sequential Container. **[4]**

b) What is meant by Associative container? State and explain the types. **[6]**

c) Use minimum 8 functions of vector STL. Write a program to explain the same. **[8]**

● ● ●

Total No. of Questions : 8]

SEAT No. :

P647

[Total No. of Pages : 2

[5869]-274

S.E. (Computer Engineering)
COMPUTER GRAPHICS
(2019 Pattern) (Semester - III) (210244)

Time : 2½ Hours] *[Max. Marks : 70*

Instructions to the candidates:

1) ***Answer Q.No.1 or Q.No.2, Q.No.3 or Q.No.4, Q.No.5 or Q.No.6 and Q.No.7 or Q.No.8.***
2) ***Neat diagrams must be drawn wherever necessary.***
3) ***Figures to the right side indicate full marks.***
4) ***Assume suitable data if necessary.***

Q1) a) Consider a polygon with 4 sides as follow $P_1(1, 1)$, $P_2(3, 1)$, $P_3(3, 3)$, $P_4(1, 3)$. Scale this polygon to half of its size. Draw initial and scaled polygon. **[6]**

b) What is parallel projection? Explain in brief about each type of parallel projections? **[6]**

c) Explain rotation about an arbitrary point in 2D. **[6]**

OR

Q2) a) Consider a square A(1, 0), B(0, 0), C(0, 1) and D(1, 1). Show the steps to rotate the given square by 45º clockwise about the point A(1, 0). Draw initial and rotated square. **[6]**

b) What is perspective projection? Explain in brief about each type of perspective projections? **[6]**

c) Explain rotation about an arbitrary axis in 3D. **[6]**

Q3) a) Explain and compare point source and diffuse illumination. **[6]**

b) Explain Z-buffer (Depth Buffer) algorithm with example. **[6]**

c) List properties of light. **[5]**

OR

Q4) a) Explain and compare diffuse and specular reflection. **[6]**

b) Explain Painters (Depth Sort) algorithm with example. **[6]**

c) What is the need of hidden surface algorithm? **[5]**

P.T.O.

Q5) a) What is interpolation? Write short note on interpolating algorithm. **[6]**

b) Explain Hilbert curve and give its fractal dimension. **[6]**

c) How is coastline measured? What are the methods of measuring length? **[6]**

OR

Q6) a) Derive blending function of Bezier curve. How blending function is calculated for cubic polynomial curve? **[6]**

b) Explain Triadic curve and give its fractal dimension. **[6]**

c) How do you find the area under a normal curve? **[6]**

Q7) a) Write short note on motion specification. **[6]**

b) Draw block diagram of NVIDIA workstation and explain it in brief. **[6]**

c) Write algorithms to create and delete a segment. **[5]**

OR

Q8) a) Explain following terms with example : **[6]**

i) Key frames.

ii) Morphing.

b) Explain Intel i860 processor with block diagram. **[6]**

c) What does GPU stand for? What is the role of GPU in gaming? List any four GPUs used in gaming. **[5]**



Total No. of Questions : 8] **SEAT No. :**

P648 **[Total No. of Pages : 2**

[5869] - 275
S.E. (Computer Engineering)
DIGITAL ELECTRONICS AND LOGIC DESIGN
(2019 Pattern) (Semester - III) (210245)

Time : 2½ Hours] ***[Max. Marks : 70***

Instructions to the candidates:

1) ***Attempt Q1 or Q2, Q3 or Q4, Q5 or Q6, Q7 or Q8.***
2) ***Neat diagram must be drawn whenever necessary.***
3) ***Assume suitable data if necessary.***

Q1) a) Convert the following flip flop **[6]**

i) JK FF to T FF

ii) SR FF to D FF

b) Explain the ring counter design for the initial condition 1010. From initial state explain and draw all possible states. **[6]**

c) Design 2 bit synchronous up counter using MS JK flipflop. **[6]**

OR

Q2) a) Explain the internal diagram of IC 7490. Design MOD 7 counter using IC 7490. **[6]**

b) Write short notes on Johnson counter. **[6]**

c) Compare synchronous and ripple counter. **[6]**

Q3) a) Draw the ASM chart for a 2 bit Binary counter having one enable line E such that.

: E = 1 (counting enabled), E = 0 (Counting disabled) **[6]**

b) Implement 3 bit binary to gray code converter using PLA. **[6]**

c) Draw and explain the general structure of PLA. **[5]**

OR

Q4) a) State and explain basic components of ASM chart. **[6]**

b) Draw and explain general structure of PAL. **[5]**

c) Implement the following function using PLA:

f1 = m (0, 3, 4, 7) f2 = m (1, 2, 5, 7) **[6]**

P.T.O.

Q5) a) What do you mean by Totem Pole output? Explain with the help of circuit diagram. **[6]**

b) List the differences between CMOS and TTL logic family. **[6]**

c) Explain with neat diagram working CMOS invertor. **[6]**

OR

Q6) a) Define the following terms and mention its standard values for TTL family: **[6]**

i) Voltage parameter

ii) Fan Out

iii) Noise Margin

b) What do you mean by tri-state buffer? **[6]**

c) Draw 2-i/p standard TTL NAND gate with Totem Pole. Explain operation of transistor (ON/OFF) with suitable input conditions and truth table.**[6]**

Q7) a) Which are various functional units of microprocessors? Explain in brief. **[6]**

b) Explain the Memory organization of the microprocessor. **[5]**

c) Explain the 4-bit Multiplier circuit using ALU and shift registers in brief. **[6]**

OR

Q8) a) What is Microprocessor? Explain the system bus in brief. **[6]**

b) How Basic Arithmetic operations are performed using ALU IC 74181?**[5]**

c) Which are various functional units of microprocessors? Explain ALU in brief. **[6]**

Total No. of Questions : 8]

SEAT No. :

P649

[Total No. of Pages : 3

[5869]-277
S.E. (Computer Engineering)
DATA STRUCTURES AND ALGORITHMS
(2019 Pattern) (Semester - II)

Time : 2½ Hours] *[Max. Marks : 70*

Instructions to the candidates:

1) ***Answer Q.1 or Q.2, Q.3 or Q.4, Q.5 or Q.6, Q.7 or Q.8.***
2) ***Neat diagrams must be drawn wherever necessary.***
3) ***Figures to the right indicate full marks.***
4) ***Assume suitable data, if necessary.***

Q1) a) Draw any directed graph with minimum 6 nodes and represent graph using adjacency matrix, adjacency list and adjacency multi list. **[6]**

b) Consider the graph represented by the following adjacency matrix : **[6]**

	1	2	3	4	5	6
1	0	6	1	5	0	0
2	6	0	5	0	3	0
3	1	5	0	5	6	4
4	5	0	5	0	0	2
5	0	3	6	0	0	6
6	0	0	4	2	6	0

Find minimum spanning tree of this graph using prim's Algorithm.

c) Write a short note on topological sorting. **[6]**

OR

Q2) a) Write non-recursive pseudo for Depth First Search (DFS). **[6]**

b) Consider the given graph and find the shortest path by using Dijkstra's algorithm. From source to all other nodes. **[6]**

P.T.O.

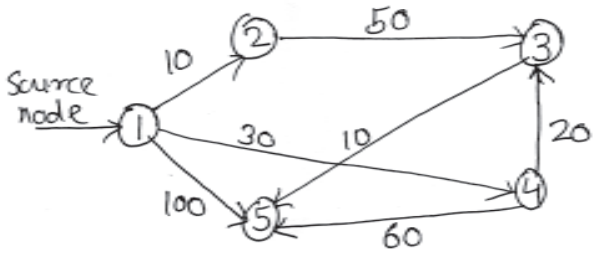

c) Show BFS and DFS for the following graph with starting vertex as 1. Explain with proper steps. **[6]**

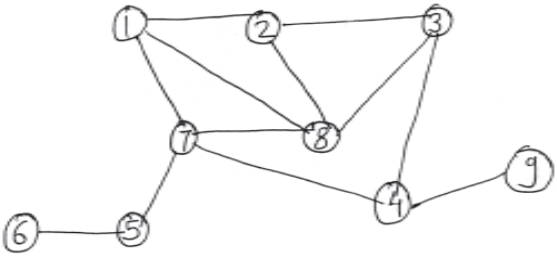

Q3) a) Explain with example **[6]**

i) Red - Black Tree

ii) Splay Tree

b) Construct AVL tree for following sequence of keys. **[6]**

1, 2, 3, 4, 8, 7, 6, 5, 11, 10

c) What is OBST in data structure? and what are advantages of OBST? **[5]**

OR

Q4) a) Explain the following:

i) Static and dynamic tree tables with suitable example. **[3]**

ii) Dynamic programming with principle of optimality. **[3]**

b) Write short note on: **[6]**

i) AA tree

ii) K - dimensional tree

c) Explain AVL tree rotations with example. **[5]**

Q5) a) Construct B tree of order 5 for the following data: **[6]**

78, 21, 14, 11, 97, 85, 74, 63, 45, 42, 57

b) Explain B+ tree delection with example. **[6]**

c) What is B+ tree? Give structure of it's internal note. What is the difference between B and B+ tree. **[6]**

OR

Q6) a) Build B+ tree of order 3 for the following data:

F, S, Q, K, C, L, H, T, V, W, M, R **[6]**

b) Write an algorithm of B tree deletion. **[6]**

c) Explain with example trie.tree. Give advantage and applications of trie tree. **[6]**

Q7) a) Define sequential file organization. Give it's advantages and disadvantages. **[6]**

b) What is file? List different file opening modes in C++. Explain concept of inverted files. **[6]**

c) Write short note on external sort. **[5]**

OR

Q8) a) A write a C++ program to create a file. Insert records into the file by opening file in append mode. Search for a specific record into file. **[6]**

b) Sort the following elements using two way merge sort with m = 3.

20, 47, 15, 8, 9, 4, 40, 30, 12, 17, 11, 56, 28, 35 **[6]**

c) Explain indexed sequential file organization. Compare it with direct access file. **[5]**

Total No. of Questions : 8] **SEAT No. :**

P2297 **[Total No. of Pages : 2**

[5869]-278
S.E. (Computer Engineering)
SOFTWARE ENGINEERING (210253)
(2019 Pattern) (Semester - IV)

Time : 2½ Hours] ***[Max. Marks : 70***

Instructions to the candidates:

1) ***Sovle Q.1 or Q.2, Q.3 or Q.4, Q.5 or Q.6, Q.7 or Q.8.***
2) ***Neat diagrams must be drawn wherever necessary.***
3) ***Assume suitable data, if necessary.***

Q1) a) Design and discuss the project decomposition and work task communication process. **[8]**

b) Discuss any 2 of the following with suitable example: **[10]**

i) FP-Based Estimation

ii) Object Point (OP)-based estimation.

iii) Process-Based Estimation.

OR

Q2) a) Describe any two software size estimation techniques. **[8]**

b) Discuss any 2 of the following with suitable example: **[10]**

i) Problem-Based Estimation

ii) LOC-Based Estimation

iii) Project Scheduling and basic principles of project scheduling.

Q3) a) List the design concepts. Explain refinement and refactoring. Give the importance of Refactoring in improving the quality of software. **[9]**

b) List the different architectural styles. Explain any two in detail. **[8]**

OR

Q4) a) Enlist and explain Component level design steps in detail. **[9]**

b) Differentiate between followings. **[8]**

i) Cohesion and coupling in context of software design? How are these useful for good design of a system?

ii) Abstraction and Refinement.

P.T.O.

Q5) a) Explain Risk identification process? What are the different categories of risks? **[8]**

b) Write Short Note: **[10]**

i) Layers of SCM Process

ii) RMMM Plan

OR

Q6) a) Explain Risk Projection and Risk Refinement in detail. **[8]**

b) Explain the change control mechanism in SCM. **[10]**

Q7) a) Explain STLC (Software Testing Life Cycle). **[7]**

b) Explain the following: **[10]**

i) Unit testing and integration testing.

ii) White box testing and black box testing.

OR

Q8) a) Explain phases in Verification and Validation model with suitable diagram. **[7]**

b) Discuss any 2 of the following in detail. **[10]**

i) Acceptance Testing

ii) Tools for Automated Testing and feature.

iii) Defect Life Cycle.

□□□

Total No. of Questions : 8]

SEAT No. :

P650

[Total No. of Pages : 2

[5869]-279
S.E. (Computer)
MICROPROCESSOR
(2019 Pattern) (Semester - IV) (210254)

Time : 2½ Hours] *[Max. Marks : 70*

Instructions to the candidates:

1) ***Answer Q.1 or Q.2, Q.3 or Q.4, Q.5 or Q.6, Q.7 or Q.8.***
2) ***Neat diagrams must be drawn whenever necessary.***
3) ***Figures to the right side indicate full marks.***
4) ***Assume suitable data if necessary.***

Q1) a) With the help of a neat diagram, explain the Page Translation Process in 80386. **[6]**

b) Draw and explain General Selector Format. **[6]**

c) What is a Logical address, Linear address and Physical address? **[6]**

OR

Q2) a) Explain the use of following instructions in detail : **[6]**

i) SGDT ii) LIDT iii) SLDT

b) Explain the Segment Translation Process with a neat diagram of 80386. **[6]**

c) Enlist various types of system and non-system descriptors in the 80386. Explain their use in brief. **[6]**

Q3) a) Write a short note on CPL, DPL, and RPL. **[6]**

b) Explore the role of various fields in Page Level Protection. **[6]**

c) List and explain various Privilege Instructions. **[5]**

OR

P.T.O.

Q4) a) What is call gate? Explain how it is used in calling functions with higher privilege levels. **[6]**

b) Define the functions of Type Checking and Limit Checking in protection. **[6]**

c) Explain different levels of protection? State the rules of protection check. **[5]**

Q5) a) Explore the role of Task Register in multitasking and the instructions used to modify and read Task Register. **[6]**

b) Draw and Explain the Task State Segment of 80386. **[6]**

c) Difference between Real Mode and Virtual 8086 Mode. **[6]**

OR

Q6) a) Explain the TSS descriptor of 80386 with a neat diagram. **[6]**

b) Explore memory management in the Virtual 8086 Mode. **[6]**

c) List and explain various features of virtual 8086 Mode. **[6]**

Q7) a) Explain the process of Enabling and Disabling Interrupts in 80386. **[6]**

b) Differentiate and Explain the Interrupt gate and Trap gate descriptor. **[6]**

c) Differentiate between Microprocessor and Microcontroller. **[5]**

OR

Q8) a) With the help of the necessary diagram, explain the structure of IDT in 80386. **[6]**

b) Explain different types of exceptions in 80386 with suitable examples. **[6]**

c) Draw and Explain the Architecture of a Typical Microcontroller. **[5]**

❄ ❄ ❄

Total No. of Questions : 8]

SEAT No. :

P651

[Total No. of Pages : 2

[5869]-280

S.E. (Computer Engineering)

PRINCIPLES OF PROGRAMMING LANGUAGES

(2019 Pattern) (Semester - IV) (210255)

Time : 2½ Hours] ***[Max. Marks : 70***

Instructions to the candidates:

1) ***Attempt Q1 or Q2, Q3 or Q4, Q5 or Q6, Q7 or Q8.***
2) ***Neat diagrams must be drawn wherever necessary.***
3) ***Assume suitable data if necessary.***

Q1) a) Describe primitive data types. List the primitive data types in Java and their respective storage capacity. **[6]**

b) Write short notes on Java Virtual Machine(JVM) with diagram. **[6]**

c) State the uses of the final keyword in Java? **[6]**

OR

Q2) a) Define String in Java. Explain following operations of class strings in Java with example. **[6]**

i) To find length of the string
ii) To compare two strings
iii) To extract a character from a string
iv) To concatenate two strings

b) Explain Java's role in Internet. Justify the following features of Java. **[6]**

i) Secure
ii) Architectural Neutral
iii) Distributed.

c) Summarize different access controls in Java. Explain the situation if you remove static modifier from the main method. **[6]**

Q3) a) State the difference between character and byte stream in Java. Give any two input and any two output classes for character streams. **[6]**

b) Describe Exception. Explain keywords try, catch, throw, throws and finally related to exception handling. **[6]**

c) Define package and interfaces in Java? Explain it with suitable example. **[5]**

OR

P.T.O.

Q4) a) Define is inheritance. List the advantages of Inheritance. Explain Simple inheritance in java with example. **[6]**

b) Elaborate the significance of key word "Super" in Java. Demonstrate with example for Super keyword in Java constructor. **[6]**

c) State the importance of finally blocks. Illustrate the ways finally block differ from finalize() method. **[5]**

Q5) a) Interpret the terms multitasking and multiprocessing and multithreading in Java with example. **[6]**

b) List the Features, advantages and limitations of Angular JS. **[6]**

c) Write the JavaScript code to create Login page Form. **[6]**

OR

Q6) a) Compare React JS and Angular JS and Vue JS. **[6]**

b) Elaborate the terms getPriority() and setPriority() methods with example. **[6]**

c) Explain the uses of isAlive() and Join() methods in Java thread with example. **[6]**

Q7) a) Describe Functional Programming. Enlist its features. Also list the commonly used functional programming languages. **[6]**

b) Write sequences of CAR's and CDR's that will pick the atom pear our of the following s-expression : **[6]**

i) (apple orange pear grapes)

ii) ((apple orange) (pear grapes))

iii) (((apple)(orange) (pear) (grapes)))

c) Explain the concept of "Structures" in Prolog with example. **[5]**

OR

Q8) a) Describe Logical Programming. Enlist its features. Also list the commonly used Logical programming languages. **[6]**

b) Write a LISP program to find the factorial of n numbers using recursion concept. **[6]**

c) Explain the following number predicates using suitable example. **[5]**

i) NUMBERP

ii) ZEROP

iii) PLUSP

iv) EVENP

v) ODDP



Total No. of Questions : 8]

SEAT No. : ____

P652

[Total No. of Pages : 4

[5869] - 281

S.E. (Information Technology)

DISCRETE MATHEMATICS

(2019 Pattern) (Semester - III)

Time : 2½ Hours] ***[Max. Marks : 70***

Instructions to the candidates :

1) ***Answer Q.1 or Q.2, Q.3 or Q.4, Q.5 or Q.6, Q.7 or Q.8.***
2) ***Figures to the right indicate full marks.***
3) ***Draw neat diagrams wherever necessary.***
4) ***Use of scientific calculators is allowed.***
5) ***Assume suitable data if necessary.***

Q1) a) What are various operations on Graph? Explain it in detail? **[4]**

b) Find the maximum flow in the given network. **[8]**

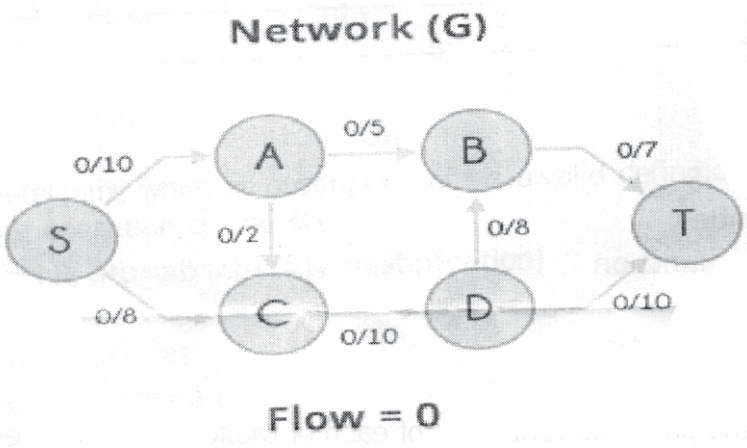

c) Find the shortest path using Dijikstra's algorithm. **[6]**

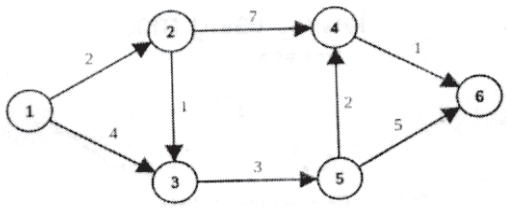

OR

P.T.O.

Q2) a) Let 'G' be a connected planar graph with 20 vertices and the degree of each vertex is 3. Find the number of edges and regions in the graph. **[6]**

b) Explain the following types of graphs with the help of examples : **[6]**

i) Bipartite Graph ii) Complete Graph

iii) Regular Graph iv) Spanning Subgraph

c) Find under what conditions Km, n the complete bipartite graph will have an Eulerian circuit. **[6]**

Q3) a) Suppose that the relation R on a set is represented by the matrix M_R. Is R reflexive, symmetric, and/or anti-symmetric? **[6]**

$$\begin{bmatrix} 1 & 1 & 0 \\ 1 & 1 & 1 \\ 0 & 1 & 1 \end{bmatrix}$$

b) Find the homogeneous solution for the recurrence relation **[6]**

$A_n - 6\ a_{n-1} - 11\ a_{n-2} + 6a_{n-3}$ with $a_0 = 2$, $a_1 = 5$, $a_2 = 15$

c) Let $f(x) = x + 2$, $g(x) = x\text{-}2$, $h(x) = 3x$, for $x \in R$ where R is the set of real numbers Find i) gof ii) fog iii) fof iv) hog v) gog. **[5]**

OR

Q4) a) Find Relation Matrix, **[6]**

i) If A = {1, 2, 3, 4, 5, 6} and a R b iff a divides b for a, b ε A.

ii) R = $\{(a, b)/a < b\}$ for a, b ε A.

b) Let A = {1, 2, 3, 4}, B = {a, b}, and R = {(1, *a*), (2, *a*), (3, *a*), (4, *a*)}, S = {(4, *a*), (4, *b*), (3, *a*), (3, *b*)} **[6]**

Find

i) A × B ii) ~ R

iii) ~ S iv) ~ R ⋃ ~ S

c) Describe : **[5]**

i) Identity function

ii) Composite function

iii) Inverse function

Q5) a) Find the prime factorization of each of the following integer. **[6]**

i) 6647 ii) 45500

iii) 10!

b) Find integers p and q such that 51p + 36q = 3 using Extended Euclidian algorithm. Also find GCD. **[6]**

c) Find the values of the following using modular arithmetic. **[6]**

i) 77 mod 9

ii) 3110 mod 13

OR

Q6) a) Solve the following using Fermat's Little theorem. **[6]**

i) 769 mod 23

ii) 3101 mod 13

b) Find Euler Totient Function of the following numbers. **[6]**

i) 75 ii) 5488

iii) 77

c) Compute GCD of the following using Euclidean algorithm. **[6]**

i) GCD (831, 366)

ii) GCD (2222, 1234)

Q7) a) Consider the (2, 6) encoding function e. e(00) = 100000, **[7]**
e(10) = 101010
e(01) = 001110, e(11) = 101001
Find minimum distance of e.
How many errors will e detect?

b) Let R = {0°, 60°, 120°, 180°, 240°, 300°} and * = binary operation, so that a *b is overall angular rotation corresponding to successive rotations by a and then by b. Show that (R,*) is a Group. **[6]**

c) Prove that the following table on relation of elements of set G = {0, 1, 2, 3, 4, 5} multiplication mod 6 is not a group. **[4]**

	0	1	2	3	4	5
0	0	1	2	3	4	5
1	1	2	3	4	5	0
2	2	3	4	5	0	1
3	3	4	5	0	1	2
4	4	5	0	1	2	0
5	5	0	1	2	3	4

OR

Q8) a) Determine whether description of * is a valid definition of a binary operation on the set. **[6]**

i) On R, a*b = ab (ordinary multiplication)

ii) On Z +, a*b = a/b

iii) On Z, a*b = ab

iv) On Z+, a*b = a–b

v) On Z, a*b = 2a+b

vi) On R, a*b = ab/3

b) S = {1, 2, 3, 6, 12}, where a*b is defined as LCM (a, b). **[7]**

Determine whether it is an Abelian Group or not.

c) Define Ring. **[4]**

▽▽▽▽

Total No. of Questions : 08]

SEAT No. :

P653

[Total No. of Pages : 2

[5869]-282
S.E. (IT) (Semester - III)
LOGIC DESIGN & COMPUTER ORGANIZATION
(2019 Pattern)

Time : 2½ Hours] ***[Max. Marks : 70***

Instructions to the candidates:

1) ***Answer Q1 or Q2, Q3 or Q4, Q5 or Q6, Q7 or Q8 .***
2) ***Assume suitable data, if necessary.***
3) ***Neat diagrams must be drawn wherever necessary***
4) ***figures to the right indicate full marks.***

Q1) a) Differentiate between combinational circuit & sequential circuit. **[9]**

b) Explain with diagram, how a D Flip Flop can be converted to t Flip - Flop. **[9]**

OR

Q2) a) Define register. Draw & explain various types of shift register. **[9]**

b) Delineate modulus of counter. Design MOD - 81 counter using decade counter IC - 7490. **[9]**

Q3) a) Explain following terms in brief. **[9]**

i) ALU signals

ii) ALU functions

iii) ALU types

b) Write in brief about fetch cycle with registers involved & sequence of micro instructions to carry out those operations. **[8]**

OR

Q4) a) What is a register in CPU? List various registers commonly used in CPU. write short note on Flag register. **[9]**

b) Explain & draw a basic structure of VON neumann architecture. Write the difference between Harvard & Von Neumann architecture with diagrams. **[8]**

P.T.O.

Q5) a) What is a machine instruction? Explain elements of machine instruction. Describe 0-1-2-3 address formats of machine instruction. **[9]**

b) Draw & explain SISD, SIMD, MISD & MIMD architectures **[9]**

OR

Q6) a) What are the various data operands on which instruction operates? Give examples of each data type. **[9]**

b) What is meant by multicore architecture? What are its advantages? List the typical features of multicore intel core i7. **[9]**

Q7) a) Along with suitable diagram, explain fully associative cache mapping technique. **[9]**

b) Compare : **[8]**

i) SRAM & DRAM.

ii) Memory mapped I/O & I/O mapped I/O.

OR

Q8) a) Explain in brief the Characteristics of memory systems. Draw memory hierarchy. What is the objective of organizing different memories at the different hierarchy levels? **[9]**

b) What is DMA? Along with suitable diagram, explain how DMA is used for data transfer. **[8]**



Total No. of Questions : 8] **SEAT No. :**

P654 **[Total No. of Pages : 2**

[5869] - 283
S.E. (Information Technology)
DATA STRUCTURES & ALGORITHMS
(2019 Pattern) (Semeser - III) (214443)

Time : 2½ Hours] ***[Max. Marks : 70***

Instructions to the candidates:

1) ***Answer Q.1, or Q.2, Q.3 or Q.4, Q.5or Q.6, Q.7 or Q.8.***
2) ***Neat diagrams must be drawn wherever necessary.***
3) ***Figures to the right side indicate full marks.***
4) ***Assume suitable data, if necessary.***

Q1) a) Convert the following infix expressions to prefix expressions using stack data structure.

i) A+B*C^D-E/F

ii) ((A+B)*C-(D-E))^(F+G) **[9]**

b) Implement Priority queue using linked representation and mention the time complexity of operations. **[9]**

OR

Q2) a) Write sudo code for converting a given infix expression to postfix expression and apply the algorithm to convert (a+b)*c to postfix. **[9]**

b) Write a code for singly linked list creation, insert and Display and mention the time complexity of operations. **[9]**

Q3) a) Suppose the following sequence lists the nodes of a binary tree in preorder and inorder respectively. **[9]**

Preorder - G B Q A C K F P D E R H

Inorder - Q B K C F A G P E D H R

Construct a binary tree from the given traversals

b) Write a note non-recursive function to delete a node in the BST. **[8]**

OR

Q4) a) Explain the difference between array representation and linked representation of binary tree. Justify your answer using suitable example of each. **[9]**

b) What are the advantages and disadvantages of TBT? Write a algorithm to implement Inorder Traversal of Inorder TBT. **[8]**

P.T.O.

Q5) a) For the given graph, construct the Adjacency Matrix and Adjacency List. Discuss the limitation(s) of Adjacency Matrix. **[9]**

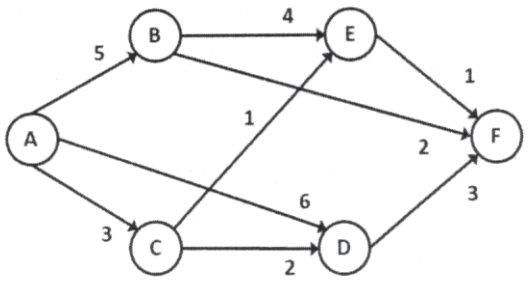

b) What is topological Sorting? Illustrate with an example how topological sorting is performed. List any two applications where topological sorting can be used. **[9]**

OR

Q6) a) What is the cost of the MST? Construct a minimum spanning tree for the given graph using Prim's Algorithm. List applications where MST is required. **[9]**

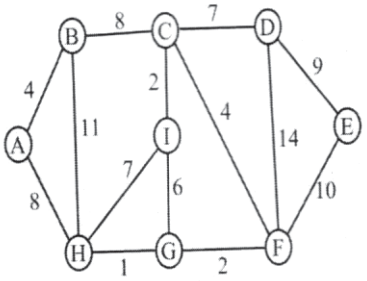

b) Illustrate with examples the Reheap up and Reheap down operations w.r.t. heaps. List any three applications of Heap. **[9]**

Q7) a) Explain basic concept of Hash table? Define Hash table? Write characteristics of good hash function. **[9]**

b) Write Comparison of different file organizations (sequential, index sequential and Direct Access) **[8]**

OR

Q8) a) Explain with example hash functions. **[9]**

b) Explain Concept of File? Write all File types and explain file organization. **[8]**

♦ ♦ ♦

Total No. of Questions : 8]

SEAT No. :

P655

[Total No. of Pages : 2

[5869]-284

S.E. (Information Technology)
OBJECT ORIENTED PROGRAMMING
(2019 Pattern) (Semester - III) (214444)

Time : 2½ Hours] *[Max. Marks : 70*

Instructions to the candidates:

1) ***Answer Q.1 or Q.2, Q.3 or Q.4, Q.5 or Q.6, Q.7 or Q.8.***
2) ***Neat diagrams must be drawn wherever necessary.***
3) ***Figures to the right side indicate full marks.***
4) ***Assume suitable data, if necessary.***

Q1) a) What are the various types of constructors in JAVA? Explain with example. **[9]**

b) What is destructor? What is the purpose of using a destructor in C++? Explain with example. **[9]**

OR

Q2) a) Design a class 'Complex' with data members for real and imaginary part. Provide default and Parameterized constructors. Write a program in JAVA to perform **addition** of two complex numbers. **[9]**

b) Write a short note on 'Copy Constructor' in JAVA? **[9]**

Q3) a) Define Inheritance. What are the types of Inheritance? How can you inherit a class in Java? **[9]**

b) What is polymorphism? Illustrate types of polymorphism with example. **[8]**

OR

Q4) a) A bank maintains two kinds of accounts for customers. One is saving and other is current. Create a class account that store customer name, account number and type of an account. Derived classes with more specific requirement and include necessary methods to achieve then following tasks : **[9]**

i) Accept deposit from the customer and update the balance.

ii) Display the balance.

iii) Compute and deposit interest.

iv) Permits withdraw and update the balance.

v) Check minimum balance condition and display necessary notice.

P.T.O.

b) What is interface in java? How to declare an interface, write a syntax? Can we achieve multiple inheritance by using interface? Justify with an example. **[8]**

Q5) a) What is an exception? List out the keywords for exception handling. Write steps to develop user defined exceptions. **[9]**

b) Write a generic method to count the number of elements in a collection that have a specific properties like odd integers, prime numbers and palindrome. **[9]**

OR

Q6) a) Explain Linked List class with an example. **[9]**

b) Write a program for integer division. The user enters two numbers through command line arguments as Num1 and Num2, perform division. If Num2 is Zero, an arithmetic exception must be generated. **[9]**

Q7) a) What is stream? Explain various stream classes in Java. **[9]**

b) Write a Java program to copy the content of the file "file1.txt" into new file "file2.txt". **[8]**

OR

Q8) a) Write a short note on : **[8]**

i) Adaptor.

ii) Singleton.

b) Implement a program for maintaining a database of student records using **Files**. Student has Student_id, name, Roll_no, Class, marks and address. Display the data for few students. **[9]**

i) Create Database.

ii) Display Database.

iii) Delete Records.

iv) Update Record.

v) Search Record.



Total No. of Questions : 8] **SEAT No. :**

P656 **[Total No. of Pages : 2**

[5869] - 285
S.E. (Information Technology)
BASICS OF COMPUTER NETWORK
(2019 Pattern) (Semester - III) (214445)

Time : 2½ Hours] ***[Max. Marks : 70***

Instructions to the candidates:

1) ***Neat diagrams must be drawn wherever necessary.***
2) ***Figures to the right side indicate full marks.***
3) ***Use of Calculator is allowed.***
4) ***Assume suitable data if necessary.***

Q1) a) Write a note on channelization techniques (Any Two) **[8]**

i) FDMA

ii) TDMA

iii) CDMA

b) Compare IEEE 802.3, IEEE 802.4, IEEE 802.5 in a tabular format. **[9]**

OR

Q2) a) Explain CSMA/CA and CSMA/CD random access technique with suitable diagram/ flowchart. Also comment on efficiency of each. **[8]**

b) Write a note on **[9]**

i) Standard Ethernet

ii) Fast Ethernet

iii) Gigabit Ethernet

Q3) a) What is subnetting? A company is granted a site address 172.16.10.33/19 Design the subnets and answer following questions: **[8]**

i) How many subnets does the chosen subnet mask produce?

ii) How many valid hosts per subnet are available?

iii) What are the valid subnets?

iv) What's the broadcast address of each subnet?

v) What are the valid hosts in each subnet?

b) What is the need of IPv6? Explain types of IPv6 address. **[9]**

OR

P.T.O.

Q4) a) Draw and explain IPv4 header format. List out special IP addresses and private IP addresses. **[8]**

b) List the network layer services and Define subnetting, supernetting, classful addressing, classless addressing. **[9]**

Q5) a) What is BGP? What are the characteristics of BGP routing protocol? What are the advantages and disadvantages of BGP routing protocol? **[9]**

b) Draw the router architecture. Explain the difference between RIP, EIGRP, OSPF in tabular format. **[9]**

OR

Q6) a) What are the problems in RIP? How to overcome the problems? Compare RIPv1 and RIPv2. **[9]**

b) Explain following routing. **[9]**

i) Static Routing

ii) Dynamic Routing

iii) Default Routing

Q7) a) What is the purpose of Leaky bucket and token bucket algorithms? Describe working of Leaky bucket algorithm with reference to CBR, VBR and bursty traffic. **[9]**

b) What is socket? Explain various socket primitives used in client server interaction. **[9]**

OR

Q8) a) Explain the three-way handshake algorithm for TCP connection establishment. List the fields in TCP header that are not part of UDP header. Give the reasons of each missing field. **[9]**

b) List out Key features of UDP Protocol. Explain how flow control is different than congestion control in TCP? **[9]**



Total No. of Questions : 9]

SEAT No. :

P657

[Total No. of Pages : 6

[5869] - 286
S.E. (Computer/Information Technology)
ENGINEERING MATHEMATICS - III
(2019 Pattern) (Semester - IV)

Time : 2 ½Hours] *[Max. Marks : 70*

Instructions to the candidates:

1) ***Q.1 is compulsory.***
2) ***Attempt Q2, or Q.3, Q4 or Q5, Q6 or Q7, Q8 or Q9.***
3) ***Neat diagrams must be drawn wherever necessary.***
4) ***Figures to the right indicate full marks.***
5) ***Use of electronic pocket calculator is allowed.***
6) ***Assume suitable data, if necessary.***

Q1) Write the correct option for the following multiple choice questions.

a) For a given set of bivariate data, $\bar{x} = 2, \bar{y} = -3$. The regression coefficient of x on y is –0.11. By using the regression equation of x on y , the most probable value of x when y=0 is _____. **[2]**

i) 0.57 ii) 0.87

iii) 0.77 iv) 1.77

b) If Probability density function $f(x)$ of a continuous random variable x is defined by

$$f(x) = \begin{cases} \frac{1}{4}, -2 \le x \le 2 \\ 0, \text{otherwise} \end{cases}$$

then $P(x \le 1)$ is _____. **[2]**

i) $\frac{1}{4}$ ii) $\frac{1}{2}$

iii) $\frac{1}{3}$ iv) $\frac{3}{4}$

P.T.O.

c) Lagrange's polynomial through the points

x	0	1	2
y	4	0	6

is given by _____. **[2]**

i) $y = 5x^2-3x+4$ ii) $y = 5x^3+3x+4$

iii) $y = 5x^2-9x+4$ iv) $y = x^2-9x+4$

d) Using Gauss elimination method, the solution of system of equations

$x+\frac{1}{4}y+\frac{1}{4}z=1, \frac{15}{4}y-\frac{9}{4}z=3, \frac{5}{4}y-\frac{19}{4}z=3$ is _____ **[2]**

i) $x=1, y=2, z=3$ ii) $x=\frac{1}{2}, y=1, z=\frac{1}{2}$

iii) $x=2, y=\frac{1}{2}, z=2$ iv) $x=1, y=\frac{1}{2}, z=-\frac{1}{2}$

e) The first four central moments of a distribution are 0,16,–64 and 162. The coefficient of Kurtosis β_2 is _____. **[1]**

i) 1.20 ii) 0.6328

iii) 1 iv) 0.3286

f) If $f(x)$ is continuous on $[a,b]$ and $f(a)f(b)<0$. then to find a root of $f(x)=0$, initial approximation x_0 by bisection method is _____ **[1]**

i) $x_0=\frac{a-b}{2}$ ii) $x_0=\frac{f(a)+f(b)}{2}$

iii) $x_0=\frac{a+b}{2}$ iv) $x_0=\frac{a-b}{a+b}$

Q2) a) If marks scored by five students in statistics test of 100 marks, are given in following table. **[5]**

Student	1	2	3	4	5
Marks(/100)x	46	34	52	78	65

Find standard deviation and arithmetic mean $\bar{x}$.

b) Fit a law of the form $y=ap+b$ by least square method for the data, **[5]**

p	100	120	140	160	180	200
y	0.9	1.1	1.2	1.4	1.6	1.7

c) If the two lines of regression are $9x+y-\lambda=0$ and $4x+y=\mu$ and the means of x & y are 2 & –3 respectively. Find values of λ,μ and correlation coefficient between x & y. **[5]**

OR

Q3) a) The first four moments of a distribution about 5 are 2,20,40 and 50. Find first four moments about mean, and β_1,β_2. **[5]**

b) Fit a parabola $y=ax^2 + bx + c$, by using least square method to the following data, **[5]**

x	0	1	2	3
y	2	2	4	8

c) Calculate the coefficient of correlation from the following information,

$n=10$, $\sum x=40$, $\sum x^2=190$, $\sum y^2=200$, $\sum xy=150$, $\sum y=40$. **[5]**

Q4) a) Bag 1 contains 2 white and 3 red balls. Bag 2 contains 4 white and 5 red balls. One ball is drawn randomly from bag 1 and is placed in bag2. Later, one ball is drawn randomly from bag2. Find the probability that it is red. **[5]**

b) The expected number of matches those will be won by India in a series of five one day matches between India and England is three. If the probability of India's win in each match remains the same and the results of all the five matches are independent of each other, find the probability that India wins the series, using Binomial distribution. Assume that each match ends with a result. **[5]**

c) The lifetime of an article has a normal distribution with mean 400 hours and standard deviation 50 hours. Find the expected number of articles out of 2,000 whose lifetime lies between 335 hours to 465 hours. (Given : Z=1.3,A=0.4032) **[5]**

OR

Q5) a) Find the expected value of the number of heads obtained when three fair coins are tossed simultaneously. **[5]**

b) On an average, 180 cars per hour pass a specified point on a particular road. Using Poisson distribution, find the probability that at least two cars pass the point in any one minute. **[5]**

c) The proportions of blood types O,A,B and AB in the general population of a country are known to be in the ratio 49:38:9:4 respectively. A research team observed the frequencies of the blood types as 88,80,22 and 10 respectively in a community of that country. Test the hypothesis at 5% level of significance that the proportions for this community are in accordance with the general population of that country. (Given : $\chi^2_{tab}=7.815$) **[5]**

Q6) a) Find the root of the equation $x^4+2x^3-x-1=0$, lying in the interval [0,1] using the bisection method at the end of fifth iteration. **[5]**

b) Find a real root of the equation $x^3+2x-5=0$ by applying Newton-Raphson method at the end of fifth iteration. **[5]**

c) Solve by Gauss-Seidel method, the system of equations:

$$20x_1 + x_2 - 2x_3 = 17$$

$$3x_1 + 20x_2 - x_3 = -18$$

$$2x_1 - 3x_2 + 20x_3 = 25$$ **[5]**

OR

Q7) a) Solve by Gauss elimination method, the system of equations:

$2x_1 + x_2 + x_3 = 10$

$3x_1 + 2x_2 + 3x_3 = 18$

$x_1 + 4x_2 + 9x_3 = 16$ **[5]**

b) Solve by Jacobi's iteration method, the system of equations:

$4x_1 + 2x_2 + x_3 = 14$

$x_1 + 5x_2 - x_3 = 10$

$x_1 + x_2 + 8x_3 = 20$ **[5]**

c) Use Regula-Falsi method to find a real root of the equation $e^x - 4x = 0$ correct to three decimal places. **[5]**

Q8) a) Using Newton's forward interpolation formula, find y at $x=8$ from the following data.

x	0	5	10	15	20	25
y	7	11	14	18	24	32

[5]

b) Evaluate $\int_0^1 \frac{dx}{x^2+1}$

using Simpson's $\frac{1}{3}^{rd}$ rule. (Take $h=0.2$) **[5]**

c) Use Euler's method, to solve $\frac{dy}{dx} = x + y,\ y(0) = 1$

Tabulate values of y for $x=0$ to $x=0.3$ (Take $h=0.1$) **[5]**

OR

Q9) a) Use Runge-Kutta method of 4th order, to solve

$\frac{dy}{dx} = xy, y(1) = 2$ at x=1.2 with h=0.2. **[5]**

b) Using Modified Euler's method, find y(0.2),

given $\frac{dy}{dx} + xy^2 = 0, y(0) = 2$ Take h=0.2 (Two iterations only) **[5]**

c) Using Newton's backward difference formula, find the value of $\sqrt{155}$ from the following data

x	150	152	154	156
$y = \sqrt{x}$	12.247	12.329	12.410	12.490

[5]

Total No. of Questions : 8]

SEAT No. :

P658

[Total No. of Pages : 3

[5869]-287
S.E. (Information Technology)
PROCESSOR ARCHITECTURE
(2019 Pattern) (Semester - IV)

Time : 2½ Hours] *[Max. Marks : 70*

Instructions to the candidates:

1) ***Answer Q.1 or Q.2, Q.3 or Q.4, Q.5 or Q.6, Q.7 or Q.8.***
2) ***Neat diagrams must be drawn wherever necessary.***
3) ***Figures to the right indicate full marks.***
4) ***Assume suitable data, if necessary.***

Q1) a) Discuss the steps in executing interrupts in PIC 18 microcontroller. **[7]**

b) Explain PIR (Peripheral Interrupt Request Register) IPR (Peripheral Interrupt Priority Register). **[8]**

c) Explain function of following LCD pins: **[3]**

i) RS

ii) RW

iii) EN

OR

Q2) a) Explain the interrupt structure of PIC18 along with IVT. **[8]**

b) Draw an interfacing diagram for 4×4 matrix keyboard with PICI8F microcontroller and explain it. **[6]**

c) Illustrate the use of following bits of INTCON2 register: **[4]**

i) INTEDG1

ii) TMR0IP

P.T.O.

Q3) a) List the steps involved in programming PIC microcontroller in capture mode. **[6]**

b) Explain RS232 standard with suitable diagram. **[6]**

c) Write short note on SPI protocol. **[5]**

OR

Q4) a) Write the steps involved in programming compare mode of CCP1 module in PIC18F458. **[6]**

b) Write short note on 12C bus. **[6]**

c) Distinguish between synchronous and asynchronous serial communication. **[5]**

Q5) a) Explain in detail the functions of ADCON0 SFR of PIC18 microcontroller. **[7]**

b) Draw and explain the interfacing diagram of DAC0808 with PIC18FXXX. **[7]**

c) Explain the significance of ADC's EOC and SOC signals. **[4]**

OR

Q6) a) Draw and explain the interfacing of LM34/LM35 with PIC18FXX for temperature measurement using on - chip ADC. **[8]**

b) A PIC 18 is connected to the 4MHz crystal oscillator. Calculate the conversion time if we want to use only ADCS bits of the ADCON0 register. **[6]**

c) List out the steps necessary for reading from EEPROM of PIC18 **[4]**

Q7) a) Draw and explain ARM core dataflow model. **[6]**

b) What are the main features of ARM7 architecture? How it is different from pure RISC processor? **[6]**

c) Describe the major Design Rules of RISC philosophy? List the features of RISC processor accepted by ARM processor. **[5]**

OR

Q8) a) Draw and explain the ARM family core architecture. **[6]**

b) Why does ARM use CPSR? Explain the program status register? **[7]**

c) Draw and explain programmers model of ARM processor. **[4]**

Total No. of Questions : 8]

SEAT No. : ____

P984

[Total No. of Pages : 3

[5869]-288
S.E. (Information Technology)
DATABASE MANAGEMENT SYSTEM
(2019 Pattern) (Semester - IV)

Time : 2½ Hours] ***[Max. Marks : 70***

Instructions to the candidates:

1) ***Answer Q.1 or Q.2, Q.3 or Q.4, Q.5 or Q.6, Q.7 or Q.8.***
2) ***Neat diagrams must be drawn wherever necessary.***
3) ***Figures to the right side indicate full marks.***
4) ***Assume Suitable data if necessary.***
5) ***Use of Scientific calculator is permitted.***

Q1) a) Consider following database: **[6]**

Student (Roll_no, Name, Address)

Subject (Sub_code, Sub_name)

Marks (Roll_no, Sub_code, marks)

Write following queries in SQL:

i) Find average marks of each student, along with the Roll_no of student of subject code 'CE2412'.

ii) Find how many students have failed in the subject "DBMS".

iii) Construct suitable view on above schema.

b) Explain on delete cascade command with suitable example. **[5]**

c) What are different types of jois in SQL? Explain with suitable example. **[7]**

OR

Q2) a) Explain with suitable example SQL aggretage functions. **[6]**

b) Write the syntax for following SQL commands: **[6]**

i)	create table	ii)	alter table
iii)	drop table	iv)	insert
v)	delete	vi)	update

c) Write and explain SQL function and procedures with sample example. **[6]**

P.T.O.

Q3) a) Explain with example Materialized evaluation and pipelining **[6]**

b) Consider following relational table. Find nontrivial and trivail functional dependency. **[5]**

A	B	C
a_1	b_1	c_1
a_1	b_1	c_2
a_2	b_1	c_1
a_2	b_1	c_3

c) List the desirable properties of decompostion. Explain loss less join with example. **[6]**

OR

Q4) a) Consider the following Book Relation. **[5]**

Book (Book_id, Title, Author, Publisher, Year, Price)

Write relational algebra expression for the following.

i) Display all book title with authors and price.

ii) Display the titles of book having price greater than 300.

iii) Display books publish in year 2000.

iv) Display all books published by 'PHP' with price greater then 300.

b) What are the measure of query cost? **[7]**

c) Define query processing. What are the steps involved in query processing? **[5]**

Q5) a) What is a deadlock? Explain deadlock recovery techniques. **[6]**

b) If we are to ensure atomicity, all the sites in which a transaction T executed must agree on the final outcome of the execution T must either commit at all sites, or it must abort at all sites. Describe the Two Phase Commit Protocol used to ensure this property in detail. **[8]**

c) How does the granularity of data items affect the performance of concurrency control? What factors affect the selection of granularity size of data items? **[4]**

OR

Q6) a) Explain deadlock prevention and Recovery. **[8]**

b) Illustrate difference between conflict serializable schedule and view serializable schedual by an appropriate example. **[6]**

c) What are the types of errors that may cause a tansaction to fail? **[4]**

Q7) a) Explain 2-tier and 3-tier architecture with diagram for online Banking Database system. **[6]**

b) Explain any two parallel Database System Architecture in detail. **[6]**

c) Enlist the Advantages & Disadvantages of Replication **[5]**

OR

Q8) a) What are different data fragmentation techniques in distributed databases? **[6]**

b) Write a short note on Centralized and Distributed Database Systems. **[6]**

c) Explain need of partitioning techniques used in I/O parallelism. Explain techniques in detail. **[5]**



Total No. of Questions : 8]

SEAT No. :

P659

[Total No. of Pages : 2

[5869]-289
S.E. (Information Technology)
COMPUTER GRAPHICS
(2019 Pattern) (Semester - IV) (214453)

Time : 2½ Hours] *[Max. Marks : 70*

Instructions to the candidates:

1) ***Answers Q.1 or Q.2, Q.3 or Q.4, Q.5 or Q.6, Q.7 or Q.8.***
2) ***Neat diagrams must be drawn whenever necessary.***
3) ***Figures to the right side indicate full marks.***
4) ***Assume suitable data if necessary.***

Q1) a) Explain the basic transformation techniques in 3D Graphics. **[6]**

i) Scaling ii) Rotation iii) Translation

b) Use the Cohen-Sutherland algorithm for clipping window having clipping window whose lower left point at(2,1), upper right point at (7,5) and line points are (1,3) and (5,6). Find the intersection points. **[6]**

c) Explain the following term with example **[6]**

i) Windowing ii) Clipping iii) Viewport

OR

Q2) a) Explain with diagram parallel and perspective projection. **[6]**

b) Explain 3D Transformation rotation about arbitrary axis. **[6]**

c) Using Sutherland-Hodgeman method, Clip Polygon ABCDE against window PQRS. The coordinators of polygon are A(80,200), B(220,120), C(150, 100), D(100, 30), E(10, 120). Coordinates of the window are P(200, 50), Q(50, 150), R(200,150), S(50, 50). **[6]**

Q3) a) What is segment? Explain different operations on segment with example. **[6]**

b) Explain RGB, HSV and HLS color models. **[6]**

c) Explain with diagram Gourand shading algorithm in detail. **[5]**

OR

P.T.O.

Q4) a) Explain the concept of segment table and display file. **[6]**

b) Explain with diagram Phong shading algorithm in detail. **[6]**

c) Define color gamut. Explain with diagram CIE Chromaticity Diagram. **[5]**

Q5) a) Differentiate between Bezier curve and B-spline curve. **[6]**

b) Write a short note on Interpolation and approximation. **[6]**

c) Explain various types of animation languages. **[6]**

OR

Q6) a) Explain Bezier curve. List its properties. **[6]**

b) Write short notes on: **[6]**

i) Koch curve

ii) Frame-by-frame Animation techniques

c) What is fractal? Explain Hilbert curve in detail **[6]**

Q7) a) What is the different usage of Virtual Reality? Explain in detail. **[6]**

b) What is Haptics Rendering Pipeline Modeling in Virtual Reality? **[6]**

c) Differentiate HMD and CAVE in Virtual Reality. **[5]**

OR

Q8) a) Explain the Graphics Rendering Pipeline. **[6]**

b) Explain the applications of Virtual Reality systems. **[6]**

c) Explain 3D position trackers. **[5]**

❄ ❄ ❄

Total No. of Questions : 8]

SEAT No. :

P660

[Total No. of Pages : 2

[5869]-290

S.E. (Information Technology)

SOFTWARE ENGINEERING

(2019 Pattern) (Semester - IV) (214454)

Time : 2½ Hours] ***[Max. Marks : 70***

Instructions to the candidates:

1) ***Answer Q1 or Q2, Q3 or Q4, Q5 or Q6, Q7 or Q8.***
2) ***Neat diagrams must be drawn wherever necessary.***
3) ***Figures to the right side indicate full marks.***
4) ***Assume suitable data, if necessary.***

Q1) a) What is Software Architecture? Explain Data centered and object oriented architectural style of the system. **[9]**

b) Explain guidelines for component level design and principles for User Interface design. **[9]**

OR

Q2) a) What are elements of Design model? What are the elements of architectural design? Explain Design principles? **[9]**

b) Explain the following fundamental software design concepts : **[9]**

i) Abstraction
ii) Architecture
iii) Patterns

Q3) a) What is Work Breakdown Structure? How is it related with scope management and explain 8/80 rule. **[8]**

b) Calculate activity expected time and variance for given problem. **[9]**

Activity ID	Optimistic Time (t_o)	Most Likely Time (t_m)	Pessimistic Time (t_p)
Job 1	1	3	5
Job 2	2	6	9
Job 3	2	3	5
Job 4	5	8	10
Job 5	11	15	20
Job 6	2	5	8
Job 7	3	3	3
Job 8	2	4	6

OR

P.T.O.

Q4) a) What is COCOMO II? What areas does COCOMO II address? **[9]**

b) Explain Information domain values (any 4). **[8]**

Q5) a) Discuss Garvin's eight Quality Dimensions. **[8]**

b) List out ISO 9126 Quality Factors. **[9]**

OR

Q6) a) Enumerate seven Principles of Testing. **[9]**

b) How Defects are managed? Explain. **[8]**

Q7) a) What is software SCM repository? Explain the features of tool set supporting SCM Repository. **[9]**

b) What is configuration identification in SCM? **[9]**

OR

Q8) a) What is Software Reuse? Explain benefits and Drawbacks of software reuse. **[9]**

b) Write short note on : **[9]**

i) Test Driven Development (TDD).

ii) Collaborative development.



Total No. of Questions : 8]

SEAT No. :

P661

[Total No. of Pages : 3

[5869]-292
S.E. (Electronics & Computer)
ELECTRONIC CIRCUITS
(2019 Pattern) (Semester - III)

Time : 2½ Hours] ***[Max. Marks : 70***

Instructions to the candidates:

1) ***Answer Q1 OR Q2, Q3 OR Q4, Q5 OR Q6, Q7 OR Q8.***
2) ***Neat diagrams must be drawn wherever necessary.***
3) ***Figures to the right indicates full marks.***
4) ***Assume suitable data if necessary.***

Q1) a) Explain the concept of Current boosting with neat circuit diagram in three terminal voltage regulators. **[5]**

b) Calculate range of the R_2 resistance for the output voltage 0-20V. Assume R_1 = 270Ω and $I_{adjustable}$ is 100 μA. Draw typical connection diagram using adjustable voltage regulator. **[6]**

c) Draw the block diagram of SMPS and explain in detail. **[6]**

OR

Q2) a) Compare between linear power supply and switch mode power supply. **[6]**

b) Design an adjustable voltage regulator using LM317 for output voltage using LM317 for output voltage 1.25V to 15V and draw necessary connection diagram (Assume R1 = 240Ω $I_{adjustable}$ = 100μA) **[6]**

c) Draw the ckt diagram of low dropout regulator and explain in detail. **[5]**

Q3) a) Draw the block diagram of op-amp and explain in detail. **[6]**

b) Write notes on : **[6]**

i) level shifter

ii) Current mirror circuit

P.T.O.

c) An emitter biased Dual input balanced output differential amplifier has the following specification : **[6]**

$V_{CC} = \pm$ 10V $R_{C1} = R_{C2} = 3.7k\Omega$ and $R_E = 4.2\ k\Omega$ $\beta_{ac} = \beta_{dc} = 100$ & $V_{BE} = 0.7V$

Calculate

i) Voltage gain (A_d)

ii) Input Resistance (R_i)

iii) Output Resistance (R_0)

OR

Q4) a) Define following op-amp parameters, write the mathematical expression and state their ideal values. **[6]**

i) CMRR

ii) Slew rate

b) An emitter biased dual input balanced output differential amplifier has the following specifications : **[6]**

$V_{CC} = \pm$ 10V $R_{C1} = R_{C2} = 2.7k\Omega$ and $R_E = 5.6k\Omega$ $\beta_{ac} = \beta_{dc} = 100$ & $V_{BE} = 0.715V$

Calculate

i) Voltage gain (A_d)

ii) Input Resistance (R_i)

iii) Output Resistance (R_o)

c) Draw the circuit of level shifter and explain it's necessity. **[6]**

Q5) a) Draw the circuit diagram of practical integrator and explain it's frequency response. **[6]**

b) Draw the neat circuit diagram of : **[5]**

i) Non inverting amplifier

ii) Inverting summing Amplifier with 2 inputs.

c) Draw the circuit diagram of inverting symmetrical Schmitt trigger : **[6]**

i) Draw the input output wave forms.

ii) Plot hysteresis.

OR

Q6) a) Draw the circuit diagram of three op-Amp Instrumentation Amplifier and write the equation for it's output. **[6]**

b) Draw two input inverting weighted amplifier. Write the condition to convert it in : **[5]**

i) Summing amplifier

ii) Averaging amplifier

c) Draw the circuit diagram of square & triangular wave form generator and explain in short. **[6]**

Q7) a) Enlist the types of ADC. Explain flash ADC in detail and state it's merits. **[6]**

b) Define the term "Lock range", "Capture range" and "free running frequency" and explain the transfer characteristics of PLL. **[6]**

c) Draw the block diagram of frequency multiplier and explain it's operation. **[6]**

OR

Q8) a) Calculate output frequency 'f_o' Lock range 'Δf_2' capture range 'Δf_c' of a PLL, if R_T = 1kΩ, C_T = 0.1μF, filter capacitor C = 1μF and internal resistance = 3.6kΩ. Assume $\pm$V = 10V **[6]**

b) With neat circuit diagram explain weighted resistor DAC and state it's advantages. **[6]**

c) Draw the block diagram of PLL and explain in detail. **[6]**

⌘⌘⌘

Total No. of Questions : 8] **SEAT No. :**

P662 **[Total No. of Pages : 2**

[5869] - 293
S.E. (Electronics & Computer)
DIGITAL CIRCUITS
(2019 Pattern) (Semester-III) (204182)

Time : 2½ Hours] ***[Max. Marks : 70***

Instructions to the candidates:

1) ***Answer Q. No.1 or Q. No.2, Q. No.3 or Q. No.4, Q. No.5 or Q. No.6, Q. No.7 or Q. No.8.***
2) ***Neat diagrams must be drawn wherever necessary.***
3) ***Figures to the right indicates full marks.***

Q1) a) Write a note on a 4-bit parallel binary adder. **[7]**

b) Implement the following Boolean function using a 3:8 decoder and external gates. $f(A, B, C) = \Sigma m(2, 4, 5, 7)$ **[5]**

c) Implement the following function using 8:1 multiplexer

$f(A, B, C) = \Sigma m(2, 4, 5, 7, 10, 14)$. **[5]**

OR

Q2) a) Draw the logic diagram of full-adder and its truth table. **[7]**

b) Implement a full-adder using Demultiplexer. **[5]**

c) Implement the given logic function using a 4:1 multiplexer

$f(A, B, C) = \Sigma m(0, 2, 4, 6)$. **[5]**

Q3) a) Design a 3-Bit synchronous counter using JK FF. **[8]**

b) With the neat diagram, explain the working operation of 4-bit SISO. **[5]**

c) Explain S-R flip-flop using NOR gates. **[5]**

OR

Q4) a) Design a sequence generator using T FFs. $0 \rightarrow 1 \rightarrow 7 \rightarrow 4 \rightarrow 2$ **[8]**

b) Explain the types of shift register. **[5]**

c) Explain with diagram the working of D type Flip-flop. Give its truth table. **[5]**

P.T.O.

Q5) a) Design the clocked sequential circuit for the state diagram using T flip flop. **[9]**

b) Draw ASM chart for the circuit that has control input C, clock and outputs x, y, z, **[8]**

i) If C= 1 on every rising edge of the clock code on output x, y and z changes from: 000→010→100→110→000 and repeats.

ii) If C = 0 then the circuit holds the present state.

OR

Q6) a) Design a sequence detector to detect a sequence 111 using D FF (Use Mealy machine). **[9]**

b) Explain **[8]**

i) Rules for state assignments.

ii) State reduction.

Q7) a) Differentiate between ROM and RAM. **[8]**

b) Draw a combinational circuit for a PLA with 3 inputs, 3 product terms and 2 outputs. **[10]**

OR

Q8) a) What is meant by ROM? What are the types of ROM? Compare between them. **[8]**

b) A combinational logic is defined by the functions

$F_1(A, B, C) = \Sigma(3, 5, 6, 7)$ and $F_2(A, B, C) = \Sigma(0, 2, 4, 7)$

Implement the circuit using PLA having 3 inputs, 4 product terms and 2 outputs. **[10]**



Total No. of Questions : 8]

SEAT No. : ____

P2309

[Total No. of Pages : 2

[5869]-294

S.E. (Electronics & Computer Engineering)

DATA STRUCTURES AND ALGORITHMS

(2019 Pattern) (Semester - III) (204184)

Time : 2½ Hours] ***[Max. Marks : 70***

Instructions to the candidates:

1) ***Answer Q1 or Q2, Q3 or Q4, Q5 or Q6, Q7 or Q8.***
2) ***Figures to the right indicates full marks.***
3) ***Assume suitable data if necessary.***

Q1) a) Define Queue and explain any one application of Queue. **[6]**

b) Convert the following expression into postfix. Show all steps. (a + (b * c / d) - e) **[6]**

c) Explain the working of circular queue. **[5]**

OR

Q2) a) Construct a function PUSH and POP in 'C' for stack using array. **[6]**

b) Compare stack with Queue. **[6]**

c) Explain types of queues. Write any one in detail. **[5]**

Q3) a) Distinguish singly linked list and doubly linked list. **[6]**

b) Construct a singly linked list with its 'C' function to delete a number. **[6]**

c) Describe a circular linked list. **[5]**

OR

Q4) a) Explain a 'C' function to Insert node in singly linked list. **[6]**

b) Explain a 'C' function to Insert a number in doubly linked list. **[6]**

c) Describe a Link List as ADT. **[5]**

P.T.O.

Q5) a) Explain a binary tree. Name and explain with suitable example the following terms : **[6]**

i) Root node

ii) Left sub tree and right sub tree

iii) Depth of tree.

b) Construct the binary search tree (BST) from the following elements 10, 60, 40, 28, 14, 50, 6. **[6]**

c) Explain a 'C' function to insert node in BST (Binary Search Tree). **[6]**

OR

Q6) a) Define the following terms with example with respect to Binary Tree: **[6]**

i) Strictly Binary Tree

ii) Completely Binary Tree

iii) Binary Search Tree

b) Construct the binary search tree from the following elements 5, 2, 8, 4, 1, 9, 7 Also show preorder, inorder and postorder traversal for the same. **[6]**

c) Define Binary Tree. What are its types? Explain with suitable figures. **[6]**

Q7) a) Explain with suitable example the techniques to represent a Graph. Note : Consider graph of minimum 6 vertices. **[6]**

b) Explain Dijkstra's Algorithm with suitable example. **[6]**

c) Explain with suitable example BSF and DSF traversal of graph. **[6]**

OR

Q8) a) Define the term Graph. With the help of suitable example explain adjacency matrix representation and adjacency list representation of a graph. **[6]**

b) Apply Kruskals algorithm for the given graph hence find minimum spanning Tree. **[6]**

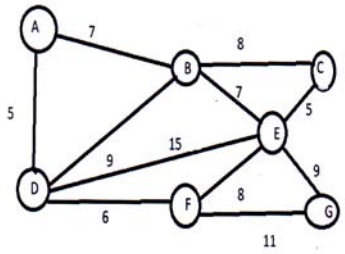

c) Explain an algorithm to find in-degree and out-degree of a vertex with a suitable example. **[6]**

⌘⌘⌘

Total No. of Questions : 8]

SEAT No. :

P985

[Total No. of Pages : 2

[5869]-295
S.E. (Electronics & Computer Engineering)
COMPUTER ORGANIZATION
(2019 Pattern) (Semester - III) (204203)

Time : 2½ Hours] *[Max. Marks : 70*

Instructions to the candidates :

1) ***Solve Q1 or Q2, Q3 or Q4, Q5 or Q6, Q7 or Q8.***
2) ***Neat diagrams must be drawn wherever necessary.***
3) ***Figures to the right indicate full marks.***
4) ***Assume suitable data if necessary.***

Q1) a) What is an I/O Interface? Why IO devices cannot be directly be connected to the system bus? What are the major functions of IO system? **[10]**

b) Explain Direct Memory Access. **[7]**

OR

Q2) a) Write the factors considered in designing an I/O subsystem? **[10]**

b) Explain the DMA functions. **[7]**

Q3) a) Draw the block diagram of Intel 8237 A and explain its functional units. **[10]**

b) Explain instruction format of Intel Pentium machine. **[8]**

OR

Q4) a) Write down different types of operations in 8086 with one example. **[10]**

b) Explain the following **[8]**

i) Memory mapped I/O

ii) I/O Registers

iii) Hardware Interrupts

Q5) a) What is instruction hazard? Explain in detail how to handle the instruction hazards in pipelining with relevant examples. **[10]**

b) Write down design issues : Instruction Level and Machine Parallelism. **[7]**

OR

Q6) a) Draw and explain the flowchart of four segment instruction pipelining. **[10]**

b) Describe the data and control path techniques in pipelining. **[7]**

P.T.O.

Q7) a) Draw the single bus organization of the CPU and explain complete instruction execution. **[5]**

b) Explain the micro instructions for fetching the word in memory with diagram and various signals. **[5]**

c) Write control sequence of instruction. Add (R1), R2 for single bus architecture. **[8]**

OR

Q8) a) Compare hardwired control Vs. Micro programmed control unit. **[10]**

b) Explain the design of multiplier control unit using delay element. **[8]**



Total No. of Questions : 8]

SEAT No. :

P664

[Total No. of Pages : 2

[5869]-297

S.E. (Electrical & Computer Engineering)

PRINCIPLES OF PROGRAMMING LANGUAGES

(2019 Pattern) (Semester - IV)

Time : 2½ Hours] *[Max. Marks : 70*

Instructions to the candidates:

1) ***Solve Q.1 or Q.2, Q.3 or Q.4, Q.5 or Q.6, Q.7 or Q.8.***
2) ***Figures to the right side indicate full marks.***
3) ***Assume the suitable data, if necessary.***

Q1) a) Explain the terms in short **[8]**

i) Software design Method

ii) Encapsulation

iii) Libraries of modules

b) Explain the terms : Generic data structures and Generic algorithms. **[10]**

OR

Q2) a) Compare any eight differences between Functional and Logical programming. **[8]**

b) Compare any ten differences between procedure and object oriented programming Languages. **[10]**

Q3) a) Explain distinct features of Java in detail. **[9]**

b) Explain Java data types with their size requirement in detail. **[8]**

OR

Q4) a) Explain use of one dimensional array in Java with any coding enomple. **[9]**

b) Write a Java program enplaining use of for loop. **[8]**

P.T.O.

Q5) a) Define about class and object in Java? Explain with example. **[9]**

b) Explain different types of constructors in Java. **[9]**

OR

Q6) a) Explain single in heritance, Multilevel Inheritance and Hierarchical Inheritance in Java with their block diagram. **[9]**

b) Explain in detail about packages in Java. write a program to create user defined package in Java. **[9]**

Q7) a) What is enception handling in Java. Explain use of try, catch and finally block in Java. **[9]**

b) Write a program in Java to detect and catch divide by zero enception. **[8]**

OR

Q8) a) Explain the concept of stream in Java? Compare byte streams and character streams in Java. **[9]**

b) Explain in short about Java Applets. Mention any four differences between Java Applet and application program. **[8]**

Total No. of Questions : 8]

SEAT No. :

P665

[Total No. of Pages : 2

[5869]-300
S.E. (Electronics & Computer)
SYSTEM PROGRAMMING & OPERATING SYSTEMS
(2019 Pattern) (Semester - IV) (204207)

Time : 2½ Hours] ***[Max. Marks : 70***

Instructions to the candidates :

1) ***Solve Q1 or Q2, Q3 or Q4, Q5 or Q6, Q7 or Q8.***
2) ***Assume suitable data wherever required.***
3) ***Figures to the right side indicate full marks.***

Q1) a) Explain the following terms under IPC: **[6]**

i) Shared Memory

ii) Message passing

b) What is real time OS? Compare hard with soft real time systems. **[6]**

c) Draw and explain Process control Block. **[6]**

OR

Q2) a) Explain different models of threads. **[6]**

b) What is CPU Scheduling? Explain any 1 scheduling algorithm with example. **[6]**

c) Consider the set of processes P1, P2, P3, P4 and P5 having burst time as 10, 1, 2, 1 and 5 ms and priority 5, 1, 3, 4 and 2 respectively. The processes are assumed to have arrived at time 0, the draw GANTT chart and calculate average turn around time and waiting time using First come First Serve scheduling algorithm. **[6]**

Q3) a) What is Semaphore? Explain how Semaphore is used to solve critical section problem. **[7]**

b) What is difference between starvation and deadlock? Explain it with the help of Dining Philosopher's Problem. **[10]**

OR

Q4) Write short note on :

a) Mutual Exclusion **[3]**

b) Banker's Algorithm **[7]**

c) Readers-Writers Problem **[7]**

P.T.O.

Q5) a) List the page replacement algorithms and explain LRU in detail. **[6]**

b) Write a short note on Segmentation. **[6]**

c) Explain the concept of virtual memory. **[6]**

OR

Q6) a) Explain the techniques of managing memory using First Fit, best fit, and worst fit with suitable example. **[6]**

b) What are types of memory fragmentation? Differentiate between them. **[6]**

c) Differentiate between paging and segmentation. **[6]**

Q7) a) Explain Linux file system. **[5]**

b) Write short note on :

i) Directory structure in OS **[6]**

ii) I/O Devices **[6]**

OR

Q8) a) Explain buffering and its types. **[8]**

b) Explain in detail RAID disk. **[9]**

Total No. of Questions : 8]

SEAT No. :

P666

[Total No. of Pages : 2

[5869] - 302

Second Year B.Tech. (Biotechnology)

BIOCHEMISTRY - I

(2019 Pattern) (Semester - III)

Time : 2½ Hours] ***[Max. Marks : 70***

Instructions to the candidates :

1) ***Answer Q.1 or Q.2, Q.3 or Q.4, Q.5 or Q.6, Q.7 or Q.8.***
2) ***Neat diagrams must be drawn whenever necessary.***
3) ***Figures to the right side indicate full marks.***
4) ***Assume suitable data, if necessary.***

Q1) Answer the following : **[18]**

a) Write in detail about size exclusion chromatography used in protein purification.

b) Describe in detail about peptide bond. Draw a schematic for the same.

OR

Q2) Describe in detail about classification of amino acid based on acid base properties. **[18]**

Q3) Draw a schematic diagram for DNA & RNA. Explain the functions of nucleotides. **[17]**

OR

Q4) Differentiate between : **[17]**

a) DNA & RNA

b) Nucleotides & Nucleosides

Q5) Write short note with structure and example on : **[18]**

a) Phospholipids

b) Sphingolipids

P.T.O.

OR

Q6) Write a short note on : **[18]**

a) Functions of lipids

b) Structural lipids

Q7) Describe the sources, functions & abnormalities related with any two water soluble vitamins. **[17]**

OR

Q8) Describe the sources, functions & deficiencies related to any two fat soluble vitamins. **[17]**

▽▽▽▽

Total No. of Questions : 8] **SEAT No. :**

P667 **[Total No. of Pages : 2**

[5869] - 303
S.E. B.Tech. (Biotechnology)
FLUID FLOW AND UNIT OPERATIONS
(2019 Pattern) (Semester - III) (215462)

Time : 2½ Hours] ***[Max. Marks : 70***

Instructions to the candidates:

1) ***Answer Q1 or Q2, Q3 or Q4, Q5 or Q6, Q7 or Q8.***
2) ***Neat diagrams must be drawn wherever ncessary.***
3) ***Figures to the right side indicate full marks.***
4) ***Assume suitable data, if necessary.***

Q1) a) A semi-tubular cylinder of 50 cm radius, with concave side upstream is submerged in flowing water of velocity 0.6 m/s. If the cylinder is 7 m long, calculate the drag force. Take C_D=2. **[5]**

b) Explain the principle, construction and working of "Cyclone". **[8]**

c) Write a short note on Sorting Classifiers. **[5]**

OR

Q2) a) Explain Working of hydro cyclone. **[4]**

b) Define and Explain **[14]**

i) Drag Force

ii) Lift force

iii) Minimum fluidization velocity

iv) Free and Hindered settling

v) Stokes Law

vi) Terminal Velocity

vii) Separation factor

Q3) a) What is fluidization and minimum fluidization velocity? Explain how the pressure drop across the bed varies during fluidization. **[7]**

b) Derive "Kozeny Carman equation" for a pressure drop across packed bed. **[10]**

OR

P.T.O.

Q4) Derive "Ergun equation" for a pressure drop across packed bed. **[17]**

Q5) a) Describe the following equipment's: **[10]**

i) Banbury Mixer

ii) Muller Mixer

b) What are the standard design considerations for the agitated vessel system? **[5]**

c) Define and Explain Cavitation. **[3]**

OR

Q6) With a neat sketch, Describe the following **[18]**

i) Pug Mill

ii) Gate Valve

iii) Glove Valve

Q7) a) Calculate the operating speed of the Ball Mill from the following data: **[5]**

Diameter of the ball mill = 800 mm

Diameter of ball = 60 mm.

If (a) Operating speed 0 is 55% less than critical speed.

(b) Critical speed is 40% more than operating speed

b) Explain **[12]**

i) Sphericity

ii) Reduction Ratio

iii) Equivalent Size

iv) Open circuit grinding

v) Closed circuit grinding

vi) Kneading

OR

Q8) a) With a neat sketch, Explain Open Circuit and Closed Circuit Grinding. **[8]**

b) Derive expression for determining critical speed of a ball mill. **[9]**



Total No. of Questions : 8]

SEAT No. :

P668

[Total No. of Pages : 2

[5869]-304

S.E. B.Tech. (Biotechnology)

HEAT TRANSFER

(2019 Pattern) (Semester - III) (215463)

Time : 2½ Hours] *[Max. Marks : 70*

Instructions to the candidates:

1) ***Answer Q.No.1 or Q.No.2, Q.No.3 or Q.No.4, Q.No.5 or Q.No.6, Q.No.7 or Q.No.8.***
2) ***Neat diagrams must be drawn wherever necessary.***
3) ***Figures to the right side indicate full marks.***
4) ***Assume suitable data if necessary.***

Q1) a) Explain with the help of diagram pool boiling curve. **[10]**

b) Write significance of following Nos. : **[8]**

i) Prandlt No.

ii) Reynold No.

iii) Nusselt No.

iv) Grashof No.

OR

Q2) a) By using Rayleigh's method of dimensional analysis derive an expression for forced convection heat transfer. **[9]**

b) What are types of condensation? Which is desirable? **[9]**

Q3) a) What is Reynold's analogy and j-factor analogy? Give importance of these transfer analogies and their application. **[9]**

b) Write a short note on Thermal Boundary layer and its significance. **[8]**

OR

Q4) a) Define following terms : **[8]**

i) Black Body.

ii) Gray Body.

iii) Opaque Body.

iv) Emissivity.

b) Explain in detail Wein's law and derive an expression $\lambda_{max} T = 0.0029$ mk. **[9]**

P.T.O.

Q5) a) What is a concept of log mean temperature difference (LMTD)? Derive an expression for concurrent flow using LMTD method. **[9]**

b) Draw a neat sketch and write a short note on Shell and Tube Heat Exchanger. **[9]**

OR

Q6) a) Draw and explain tube in tube type of heat exchangers. Why countercurrent flow is considered to be effective over co current flow? **[9]**

b) Write a short note on fouling factor and give expression for unclean surfaces. **[9]**

Q7) a) Write short notes on : **[9]**

i) Calendria Evaporator.

ii) Closed/Open Pan type evaporator.

b) Give comparison between single effect evaporator and multiple effect evaporators. **[8]**

OR

Q8) a) What is Duhring's plot? Give significance of it. **[9]**

b) Write mass balance equations along an evaporator. **[8]**



Total No. of Questions : 8]

SEAT No. :

P669

[Total No. of Pages : 2

[5869] - 305
S.E. B.Tech. (Biotechnology)
MICROBIOLOGY
(2019 Pattern) (Semester - III) (215464)

Time : 2½ Hours] *[Max. Marks : 70*

Instructions to the candidates:

1) ***Answer Q.1 or Q.2, Q.3 or Q.4, Q.5 or Q.6, Q.7 or Q.8.***
2) ***Neat diagrams must be drawn wherever necessary.***

Q1) a) Draw a typical bacterial growth curve and label the various phases. Discuss the factors affecting lag phase. **[9]**

b) What is Turbidometry in microbiology? Explain the Turbidometry equation? **[9]**

OR

Q2) a) What is Biomass? Describes the methods of biomass determination. **[9]**

b) Write short note on Continuous and Synchronous cultures. **[9]**

Q3) a) Describe physical methods of control of microorganisms with examples. **[9]**

b) How Radiation is used to control microorganisms. **[8]**

OR

Q4) a) Define Antibiotics. And explain different classes of antibiotics. **[9]**

b) Write a short note on Quaternary ammonium compounds used to control microorganisms. **[8]**

Q5) a) Describe biological method for treatment of municipal waste water. **[9]**

b) What is symbiosis? Explain with examples. **[9]**

OR

Q6) a) Describe the role of microorgainism in food. **[9]**

b) Define and explain - Nitrogen fixation, Nitrification, Denitrification. **[9]**

P.T.O.

Q7) a) Write a short note on signs and symptoms of Rabies. **[9]**

b) Define terms - epidemiology, Epidemic, Endemic, Pandemic. **[8]**

OR

Q8) a) Briefly describe Cholera disease in terms of its causative agent, signs and symptoms, mechanism of pathogenesis, epidemiology, and prevention and/or treatment. **[9]**

b) Give two examples each for bacterial, fungal and viral Infectious diseases with their etiological agents. **[8]**

♦ ♦ ♦

Total No. of Questions : 8]

SEAT No. :

P670

[Total No. of Pages : 2

[5869]-306
S.Y. B.Tech. (Biotechnology)
BIOCHEMISTRY - II
(2019 Pattern) (Semester - IV) (215470)

Time : 2½ Hours] ***[Max. Marks : 70***

Instructions to the candidates :

1) ***Answer Q1 or Q2, Q3 or Q4, Q5 or Q6, Q7 or Q8.***
2) ***Neat diagrams must be drawn wherever necessary.***

Q1) Answer the following :

a) Depict the flow chart for glycolysis with preparatory and payoff phase. **[9]**

b) Explain the significance of pentose phosphate pathway. **[9]**

OR

Q2) Answer the following :

a) Gluconeogenesis Is Energetically Expensive, but Essential-comment. **[9]**

b) Significance of glutathione and NADPH in pentose phosphate pathway. **[9]**

Q3) Answer the following :

a) Draw a schematic diagram for the Krebs cycle. **[9]**

b) Explain the step that connects glycolysis and TCA cycle. **[8]**

OR

Q4) Answer the following :

a) Write a note on any three glycogen storage disease. **[9]**

b) How do the mitochondria maintain the chemiosmotic gradient used for the electron transport chain?

$FADH_2$ and NADH are both electron carriers that bring electrons to the inner mitochondrial membrane to be used during the electron transport chain (ETC). $FADH_2$, however, produces less ATP than NADH. Why this occurs? **[8]**

P.T.O.

Q5) Answer the following :

a) Draw and explain the urea cycle. **[9]**

b) Explain the role of glutamate and glutamine in amino acid metabolism. **[9]**

OR

Q6) Answer the following :

a) Depict the urea cycle and explain ornithine transcarbamylase deficiency. **[9]**

b) Write in detail about ammonia toxicity and role of glutamine. **[9]**

Q7) Answer the following :

a) Draw a flow chart depicting odd-chain fatty acids metabolization with all enzymes involved in it? **[9]**

b) Explain in detail about the process where hormones trigger mobilization of stored triacylglycerols. **[8]**

OR

Q8) Answer the following :

a) Write down about entry of fatty acids into mitochondria via the acylcarnitine/carnitine transporter. **[9]**

b) Compare the β-oxidation of fatty acids in mitochondria and in peroxisomes. **[8]**

Total No. of Questions : 8] **SEAT No. :**

P671 **[Total No. of Pages : 2**

[5869] - 307
S.Y. B.Tech. (Biotechnology)
CELL BIOLOGY & TISSUE CULTURE
(2019 Pattern) (Semester - IV)

Time : 2½ Hours] ***[Max. Marks : 70***

Instructions to the candidates:

1) ***Answer Q.1, or Q.2, Q.3 or Q.4, Q.5 or Q.6, Q.7 or Q.8.***
2) ***Neat diagrams must be drawn wherever necessary.***
3) ***Figures to the right side indicate full marks.***

Q1) a) Write a note on Apoptosis. Give its steps and significance. **[8]**

b) Signaling is a very intricate and carefully coordinated functionality of the cells. **[10]**

OR

Q2) a) What are the check points in cell cycle? Give their significance and draw and show where the checkpoints can be found in a typical cell cycle.**[8]**

b) Describe and differentiate between mitosis and meiosis. **[10]**

Q3) a) Connective tissue connects the entire body. Explain with examples of ail the connective tissues. **[8]**

b) What are the different types of muscle tissues? Describe with labelled diagrams. **[9]**

OR

Q4) a) Stem cells are the boon to humans. Explain **[8]**

b) What are the properties of a typical cancer cell? How do we identify cancer cells? **[9]**

Q5) a) Why is CO_2 Gas supplied in animals cell culture? What is Confluent growth and contact inhibition? **[8]**

b) What are the applications of Animal Cell Culture? Describe. **[10]**

OR

P.T.O.

Q6) a) Enlist advantages and disadvantages of primary culture, cell line and transformed cells. **[9]**

b) Write notes on **[9]**

i) Advantages of Serum free media

ii) Cryopreservation

Q7) What are secondary metabolites in plants? They hold importance in medicine Why? Explain the use of Plant tissue culture in producing secondary metabolite based products. **[17]**

OR

Q8) Write short notes on:

a) Elaborate on transgenic plants and their uses. **[8]**

b) Difference between pollen culture and callus culture with their advantage and disadvantage. **[9]**



Total No. of Questions : 8]

SEAT No. :

P672

[Total No. of Pages : 2

[5869]-308

S.Y. B.Tech. (Biotechnology)
THERMODYNAMICS
(2019 Pattern) (Semester - IV) (215472)

Time : 2½ Hours] *[Max. Marks : 70*

Instructions to the candidates:

1) ***Answer Q.No.1 or Q.No.2, Q.No.3 or Q.No.4, Q.No.5 or Q.No.6, Q.No.7 or Q.No.8.***
2) ***Neat diagrams must be drawn wherever necessary.***
3) ***Figures to the right side indicate full marks.***
4) ***Use of calculator is allowed.***
5) ***Assume suitable data if necessary.***

Q1) What are the limitations of the first law of Thermodynamics? How defining the second law of thermodynamics tries to overcome the limitations of the first law. Draw the schematic representation of the Heat engine and Refrigerator and state and explain the working principle. **[18]**

OR

Q2) a) What is Clausius inequality? Elaborate on the concept of entropy and state mathematical term for entropy. **[9]**

b) Derive the mathematical statement of the Second Law of Thermodynamics. **[9]**

Q3) Explain and derive four fundamental property relations. State their significance. **[17]**

OR

Q4) a) Distinguish between molar volume and partial molar volume. Does the partial molar volume of a substance vary with the concentration of the substance in the solution? **[8]**

b) Express the partial molar property as the partial derivative of the total property of the solution. Is it an intensive property or an extensive property? **[9]**

P.T.O.

Q5) a) What do you mean by the 'extent of reaction'? How is it related to the mole fraction of the species in the reaction mixture? **[9]**

b) How is the equilibrium constant K related to the standard free energy change? Does K vary with pressure? **[9]**

OR

Q6) a) What is the criterion of chemical reaction equilibria? **[9]**

b) Define the equilibrium constant K of a chemical reaction. How is it related to K_f and K_p? **[9]**

Q7) a) Explain the thermodynamics of biochemical changes with energy-yielding and energy-requiring biochemical reactions. **[8]**

b) Explain the concept of Gibb's free energy for bio-changes with applications. **[9]**

OR

Q8) How do energy trasnformations occur in bio-systems? Explain in the perspective of thermodynamics. **[17]**



Total No. of Questions : 8] **SEAT No. :**

P673 **[Total No. of Pages : 1**

[5869] - 309
S.Y. B.Tech. (Biotechnology)
GENETICS AND MOLECULAR BIOLOGY
(2019 Pattern) (Semester - IV) (215473)

Time : 2½ Hours] ***[Max. Marks : 70***

Instructions to the candidates:

1) ***Answer Q.1 or Q.2, Q.3 or Q.4, Q.5 or Q.6, Q.7 or Q.8.***
2) ***Neat diagrams must be drawn whenever necessary.***

Q1) a) What is replication fork? How does the process of replication on one side of fork differ from that one the other? **[9]**

b) Define Replicon & Give structure of replicon. **[9]**

OR

Q2) a) Describe the initiation process of eukaryotic DNA replication. **[9]**

b) Write a short note on DNA Polymerase. **[9]**

Q3) a) Describe structure and functions of different types of RNAs. **[9]**

b) Explain the chemistry of RNA splicing. **[8]**

OR

Q4) a) Draw mRNA structure in eukaryotes and give its functional importance in the cell. **[9]**

b) Write short note on importance of RNA. **[8]**

Q5) a) Explain in details Transcription process by Initiation, Elongation and Termination events. **[9]**

b) Draw Transcription bubble during elongation phase. **[9]**

OR

Q6) a) Give schematic view of eukaryotic gene expression. **[9]**

b) Explain splicing of introns in pre-mRNA. **[9]**

Q7) a) What is translation? Explain the mechanism of translation. **[9]**

b) Write short note on Heat Shock Proteins. **[8]**

OR

Q8) a) Draw & explain Initiation steps of protein synthesis in prokaryotes. **[9]**

b) Write a short note on posttranslational modifications of proteins. **[8]**

♦ ♦ ♦

Total No. of Questions : 9]

SEAT No. : ____

P674

[Total No. of Pages : 4

[5869]-311

S.E. (Production & Industrial Engineering/Sandwich)

ENGINEERING MATHEMATICS - III

(2019 Pattern) (Semester - IV)

Time : 2½ Hours] ***[Max. Marks : 70***

Instructions to the candidates:

1) ***Question No. 1 is compulsory.***
2) ***Answer Q.1, Q.2 or Q.3; Q.4 or Q.5; Q.6 or Q.7 and Q.8 or Q.9.***
3) ***Figures to the right indicates full marks.***
4) ***Use of logarithmic tables slide rule, electronic pocket calculator and is allowed.***
5) ***Assume suitable data if necessary.***

Q1) Choose the correct option.

i) First four moments of a distribution about mean are 0, 2, 0 and 11. Then the value of β_2 is **[2]**

a) 2.75 b) 2.5

c) 2.3999 d) 0.5987

ii) Two dice are thrown and the sum of numbers on the upper faces are noted. The probability of the sum being 11 is **[2]**

a) 1/6 b) 1/36

c) 1/18 d) None of these

iii) In poisson distribution, if mean = z then the probability of r successes in n trials is given by **[1]**

a) $p(r) = \frac{e^{z} z^{r}}{r}$ b) $p(r) = \frac{e^{-z} z^{r}}{r!}$

c) $p(r) = \frac{e^{-z} z^{r}}{r}$ d) $p(r) = \frac{e^{z} z^{r}}{r!}$

P.T.O.

iv) $\nabla^2 (e^r)$ is equal to **[2]**

a) $e^r - \frac{2}{r}e^r$ b) $e^r + \frac{e^r}{r}$

c) $\frac{e^r \bar{r}}{r}$ d) $e^r + \frac{2}{r}e^r$

v) Vector field $\bar{F}$ is solenoidal if **[1]**

a) $\nabla \times \bar{F} = 0$ b) $\nabla \cdot \bar{F} = 0$

c) $\nabla^2 \bar{F} = 0$ d) $\nabla \cdot \bar{F} = 3$

vi) The heat equation is $\frac{\partial u}{\partial t} = k\frac{\partial^2 u}{\partial x^2}$, subject to conditions **[2]**

1) $u\ (0, t) = 0$
2) $u\ (100, t) = 0$
3) $u\ (x, 0) = x \qquad 0 \le x \le 50$
$= 100 - x \quad 50 \le x \le 100$

consider the general solution $(C_1 \cos mx + C_2 \sin mx).e^{-km^2t}$
then value of C_1 is

a) $C_1 = \frac{n\pi}{2}$ b) $C_1 = \frac{n\pi}{100}$

c) $C_1 = 0$ d) $C_1 = n\pi$

Q2) a) Fit a straight line of the form $y = ax + b$ to the following data. **[5]**

x	1	3	4	5	6	8
y	−3	1	3	5	7	11

b) Calculate the first four moments about the mean of the following distribution. **[5]**

x	1	2	3	4	5	6	7	8	9	10
f	6	15	23	42	62	60	40	24	13	5

c) Find the coefficient of correlation for the following table **[5]**

x	10	14	18	22	26	30
y	18	12	24	6	30	36

OR

Q3) a) Fit a straight line to the following data. **[5]**

x	0	5	10	15	20	25
y	12	15	17	22	24	30

b) First four moments of a distribution about value 4 are –1.5, 17, –30 and 108. Find the first four moments about mean, β_1 & β_2 **[5]**

c) Obtain the regression lines for the following table! **[5]**

x	6	2	10	4	8
y	9	11	5	8	7

Q4) a) A problem on computational mathematics is given to the three students A, B and C whose chances of solving it are $\frac{1}{2}, \frac{3}{4}$ and $\frac{1}{4}$ respectively. What is the probability that the problem will be solved? **[5]**

b) Probability of man aged 60 years will live for 70 years is $\frac{1}{10}$. Find the probability of 5 men selected at random, 2 will live for 70 years. **[5]**

c) Assuming that the diameters of 1000 brass plugs taken consecutively from machine form a normal distribution with mean 0.7515 cm and standard deviation 0.0020 cm. How many of the plugs are likely to be approved if the acceptable diameter is 0.752 ± 0.004 cm? **[5]**
[Given : Area corresponding to 2.25 is 0.4878
Area corresponding to 1.75 is 0.4599]

OR

Q5) a) Two cards are drawn from a well shuffled pack of 52 cards. Find the probability that they are both kings if first card drawn is not replaced.**[5]**

b) Number of road accidents on a high way during a month follows a poisson distribution with mean 5. Find the probability that in a certain month number of accidents on the highway will be between 3 and 5. **[5]**

c) Among 64 offsprings of a certain cross between guinea pigs were red, 10 were black and 20 were white. According to a genetic model, these numbers should be in the ratio 9 : 3 : 4. Test whether the data is consistent with the model at 5% level of significance? [Given $\chi^2_{2,\,0.05} = 5.99$] **[5]**

Q6) a) Find directional derivative of $\phi = x^2 + y^2 + z^2$ at (2, –1, 3) along the line $\frac{x-2}{1} = \frac{y+1}{2} = \frac{z-3}{2}$ **[5]**

b) Show that the vector field.
$\bar{F} = (y^2 \cos x + z^3)\hat{i} + (2y \sin x - 4)\hat{j} + (3xz^2 + 2)\hat{k}$
is irrotational. Also find corresponding scalar potential function ϕ such that $\bar{F} = \nabla \phi$. **[5]**

c) Evaluate $\int_c \bar{F} \cdot d\bar{r}$ where $\bar{F} = (x^2 + y^2)\hat{i} + (x^2 - y^2)\hat{j}$ and C is the curve $y = x^2$ joining (0, 0) and (1, 1). **[5]**

OR

Q7) a) If the directional derivative of $\phi = axy + byz + cxz$ at (1, 1, 1) has maximum magnitude 6 in the direction parallel to X-axis, find the values of a, b, c.**[5]**

b) Show that (Any one) : **[5]**

i) $\nabla^2(r^2 \log r) = 5 + 6\log r$

ii) $\nabla \cdot (\phi \nabla \psi - \psi \nabla \phi) = \phi \nabla^2 \psi - \psi \nabla^2 \phi$

c) Evaluate $\int_c \bar{F} \cdot d\bar{r}$ using Greens theorem where C is the ellipse

$\frac{x^2}{4} + \frac{y^2}{9} = 1$ and $\bar{F} = \sin y\,\hat{i} + x(1 + \cos y)\,\hat{j}$ **[5]**

Q8) a) Solve $\frac{\partial u}{\partial t} = c^2 \frac{\partial^2 u}{\partial x^2}$ if **[7]**

i) u is finite for all t.

ii) u (0, t) = 0 $\forall$t

iii) u (L, t) = 0 $\forall$t

iv) u (x, 0) = u_0 for $0 \le x \le L$

b) A string is stretched and fastened to two points L apart. Motion is started by displacing the string in the form $u = a \sin\frac{\pi x}{L}$ from which it is released at time $t = 0$, find the displacement $u(x, t)$ from one end. **[8]**

OR

Q9) a) Using fourier transform, solve the partial differential equation

$\frac{\partial u}{\partial t} = k\frac{\partial^2 u}{\partial x^2}$ $0 \le x \le \infty$ t > 0, subject to the following condition **[8]**

i) u (0, t) = 0 t > 0

ii) u (x, 0) = e^{-x} x > 0

iii) u and $\frac{\partial u}{\partial x} \to 0$ as $x \to \infty$

b) Solve the laplace equation **[7]**

$\frac{\partial^2 u}{\partial x^2} + \frac{\partial^2 u}{\partial y^2} = 0$

Subject to the condition

i) u (x, 0) = 0

ii) u (x, l) = 0

iii) u (∞, y)= 0

iv) u (0, y) = a_0



Total No. of Questions : 8]

SEAT No. :

P675

[Total No. of Pages : 2

[5869]-312

S.E. (Production Engineering Sandwich / Production Engineering & Industrial Engineering)

HEAT AND FLUID ENGINEERING

(2019 Pattern) (Semester - III) (211081)

Time : 2½ Hours] *[Max. Marks : 70*

Instructions to the candidates :

1) ***Solve Q1 or Q2, Q3 or Q4, Q5 or Q6, Q7 or Q8.***
2) ***Neat diagrams must be drawn wherever necessary.***
3) ***Figures to the right side indicate full marks.***
4) ***Assume suitable data if necessary.***

Q1) a) What is Darcy - Weisbach's equation? Derive and explain it. **[9]**

b) Discuss function and types of turbine and pump. **[9]**

OR

Q2) a) What are major and minor losses? Discuss in detail. **[9]**

b) A crude oil of kinematic viscosity 0.4 stroke is flowing through a pipe of diameter 300mm at the rate of 300 liters per second. Find the head lost due to friction for a length of 50 meter of the above pipe. **[9]**

Q3) a) Explain Cochran boiler with neat sketch in detail. **[9]**

b) What are proximate and ultimate analysis of fuel? **[8]**

OR

Q4) a) Explain need of boiler mounting and boiler accessories and give three examples of each. **[9]**

b) Discuss working of Babcock and Wilcox boiler with diagram. **[8]**

Q5) a) What are various types of air conditioning systems? Discuss in detail. **[9]**

b) Explain with neat sketch vapour compression refrigeration system. **[9]**

P.T.O.

OR

Q6) a) Discuss significance of air conditioning system in micro and nano machining . **[9]**

b) Explain the following terms related to refrigeration. **[9]**

i) Capacity of refrigeration

ii) Coefficient of performance of a refrigerator.

Q7) a) Explain with sketch indicator diagram of single stage reciprocating air compressor. **[9]**

b) The following results refer to a test on a petrol engine. **[8]**

Indicated power = 30kw, Brake power = 26kw, Engine speed = 1000rpm, Fuel per brake power hr. =0.35kg, Calorific Value of fuel used = 43,900kJ/kg. Calculate;

i) Indicated thermal efficiency.

ii) Brake thermal efficiency &

iii) Mechanical efficiency.

OR

Q8) a) Explain heat balance sheet of Internal Combustion engine with its significance. **[9]**

b) A single stage, single acting air compressor delivers air at 5 bars. The suction temperature is 20°C & suction pressure is 1 bar. Volume of air entering the compressor is $3m^3$/minute, Index of compression is 1.2, calculate isothermal efficiency & power required to drive the compressor. Neglect clearance volume. **[8]**

Total No. of Questions : 8]

SEAT No. : ____

P986

[Total No. of Pages : 4

[5869]-313

S.E. (Production & Industiral / Production(Sandwich))

STRENGTH OF MATERIALS

(2019 Pattern) (Semester-III) (211082)

Time : 2½ Hours] ***[Max. Marks : 70***

Instructions to the candidates:

1) ***Answer Q.1 or Q.2, Q.3 or Q.4, Q.5 Q.6, Q.7 or Q.8***
2) ***Figures to the right side indicate full marks.***
3) ***Neat diagrams must be drawn wherever necessary.***
4) ***Assume sutable data, if necessary.***

Q1) a) A cast iron bracket subject to bending has the cross section of I form with unequal flanges The dimensions of the section are as shown in fig Find the position of neutral axis and moment of Inertia of the section about neutral axis. If the maximum bending moment on the section is 40 MN-MM. Determine the maximum bending stress. what is the nature of the stress? **[9]**

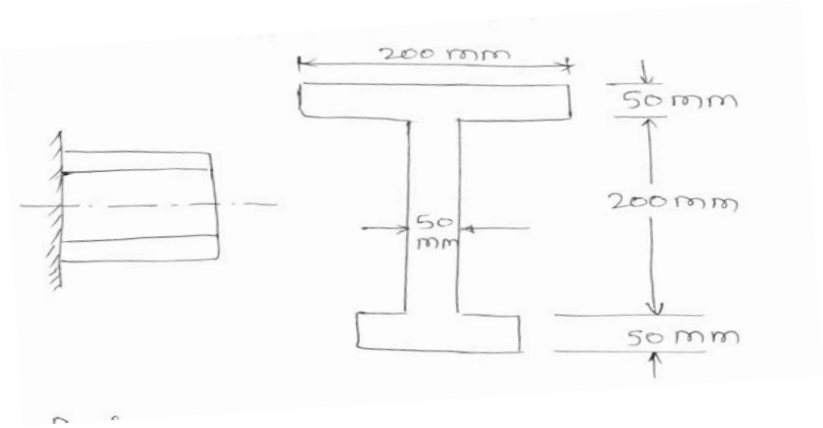

b) Define the term bending stress and explain the theory of simple bending **[8]**

OR

Q2) a) The shear force acting on a section of a beam is 50 kN. The section of the beam is T-shaped of dimensions 100 mm×100mm×20mm as shown in fig. The moment of Inertia about the horizontal neutral axis is 314. 221×10^4 mm^4 calculate the shear stress at the neutral axis and at the junction of the web and the flange **[9]**

P.T.O.

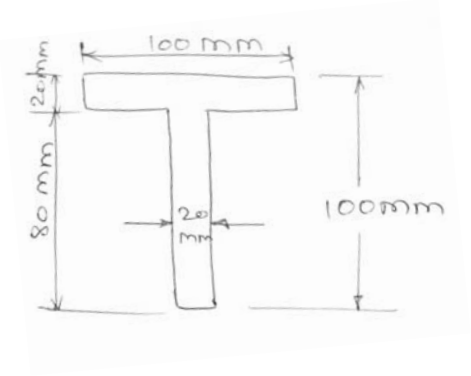

b) Explain the following terms. **[8]**

1) Neutral Axis

2) Section modulus

3) Moment of resistance

4) Strength of a section

Q3) a) Write a short note on Mohr's circle **[8]**

b) A solid vertical Prismatic bar (Steel) of equillateral triangular section of side 20mm is firmly fixed at the top. A rigid coller is attached at the lower end at a distance of 600mm from the TOP.

Calculate the strain energy stored in each of the following cases

1) When a pull of 10kN is gradually applied

2) When a force of 8kN is suddenly applied

3) When a weight of 4kN falls through 120mm before it strikes the callar E=200 GPa **[9]**

OR

Q4) a) Write short note on **[7]**

1) Resilience

2) Proof resilience

3) Modulus of resilience

b) A Square plate is subjected to state of Stress as shown in fig. The Stresses are 5x = 5N/mm^2 by = 15 N/mm^2 zxy = 10N/mm^2 construct Mohr's circle for the element **[10]**

Find.

1) Magnitude & direction of principal stresses

2) Normal & shear stresses

3) Location of planes carrying max shear stress

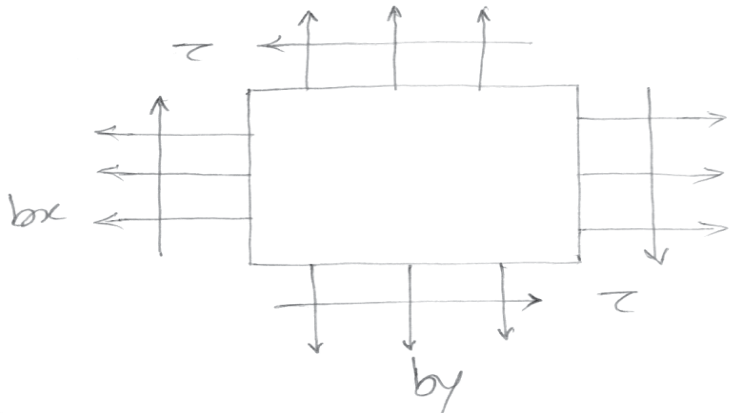

Q5) a) The maximum allowable shear stress in a hollow shaft of external diameter equal to twice the internal diameter is 80 N/mm^2. Determine the diameter of the shaft if it is subjected to a torque of 4×10^6 Nmm and a bending moment of 3×10^6 Nmm **[8]**

b) Obtain a relation for the torque and power, a solid shaft can transmit **[10]**

OR

Q6) a) A solid shaft of diameter 80 mm is subjected to a twisting moment of 8MN mm at a point and a bending moment of 5MNmm at a point Determine **[9]**

1) Principal stresses

2) Position of plane at which they act

b) Define the term torque and explain the assumptions made in the torsion theory. **[9]**

Q7) a) A SSB AB of Span 4m is loaded as shown in fig. using Macaulay's method determine **[10]**

1) Deflection at c
2) Maximum deflection
3) Slope at A

Use E = 200 GPa

I = 20×10^{-6} m^4

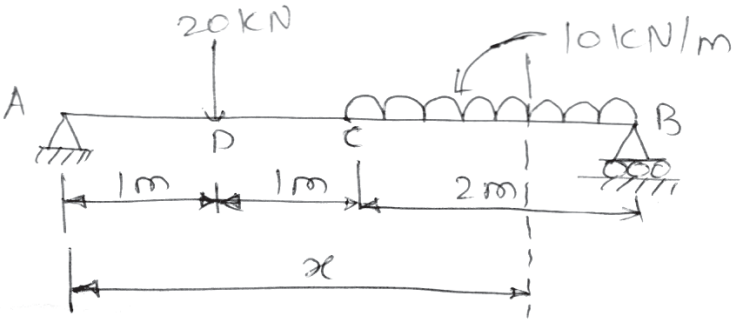

b) Write short note on Rankine Formula **[4]**

c) Define Slenderness ratio. state the limitations of Euler's formula **[4]**

OR

Q8) a) Calculate the Euler's critical load for a strut of T- section, the flange width being 10cm, overall depth 8cm & both flange and stem 1 cm thick. The strut is 3 m long & is built in at both ends

Take E = 2×10^5 N/mm^2 **[10]**

b) State assumptions made in Euler's column theory **[4]**

c) State end conditions for long column. **[4]**

Total No. of Questions : 8]

SEAT No. :

P676

[Total No. of Pages : 2

[5869]-314

S.E. (Common with Production Engineering and Industrial Engineering Production Engineering Sandwich)
MANUFACTURING PROCESSES - I
(2019 Pattern) (Semester - III) (211083)

Time : 2½ Hours] *[Max. Marks : 70*

Instructions to the candidates:

1) ***Answer Q.No.1 or Q.No.2, Q.No.3 or Q.No.4, Q.No.5 or Q.No.6, Q.No.7 or Q.No.8.***
2) ***Neat diagrams must be drawn wherever necessary.***
3) ***Figures to the right side indicate full marks.***
4) ***Assume suitable data if necessary.***

Q1) a) Explain following parts of a lathe by neat sketches : **[8]**

i) Lathe Bed.

ii) Carriage.

iii) Headstock.

iv) Tailstock.

b) What is indexing? State different indexing methods. Explain compound indexing in detail. **[10]**

OR

Q2) a) List out various taper turning methods on lathe machine. Explain Tail Stock set over method with neat sketch in detail. **[10]**

b) State various operations performed on milling machine. Differentiate between up milling and down milling. **[8]**

Q3) a) With the help of sketch, explain the construction and working of radial drilling machine. **[10]**

b) Explain the standard marking system used for grinding wheels. **[7]**

OR

Q4) a) Sketch and describe various operations which can be performed on drilling machine. **[8]**

b) Explain with neat sketch centreless grinding operation. **[9]**

P.T.O.

Q5) a) Compare Honing, Lapping and super finishing processes. **[9]**

b) Explain Polishing, Tumbling and Electroplating processes in short. **[9]**

OR

Q6) a) Explain in short Galvanizing & Metal spraying process. **[8]**

b) Explain Honing process with neat sketch in detail. **[10]**

Q7) a) What is additive manufacturing? What are its limitations? **[8]**

b) Explain material extrusion process in detail. **[9]**

OR

Q8) a) Describe various applications of additive manufacturing. **[8]**

b) Explain powder bed fusion additive manufacturing process in detail. **[9]**



Total No. of Questions : 8]

SEAT No. :

P600

[Total No. of Pages : 2

[5869] - 315

S.E. (Production Engineering & Industrial/Production(Sandwich))
MATERIAL SCIENCE AND METALLURGY (2019 Pattern)
(Semester - III) (211084)

Time : 2½ Hours] *[Max. Marks : 70*

Instructions to the candidates:

1) ***Attempt Q. 1, or Q.2, Q.3 or Q.4, Q.5 or Q.6, Q.7 or Q.8.***
2) ***Assume Suitable data if necessary.***
3) ***Figures to the right indicate full marks.***
4) ***Draw neat figures whenever necessary.***
5) ***Use of scientific calculators is allowed.***
6) ***Use of cell phone is prohibited in the examination hall.***

Q1) What is the science of powder metallurgy? Write in detail about powder metallurgy manufacturing process. **[18]**

OR

Q2) Write short note on following- **[18]**

i) Powder manufacturing

ii) Compacting

iii) Sintering

Q3) What is the heat treatment? Name a few treatments given to steels in order to change its properties. **[17]**

OR

Q4) What is annealing? Classify the different annealing processes and describe the sub critical annealing in detail. **[17]**

Q5) Classify Cast Irons. Write in brief about different Cast Irons. (Types, properties and applications). **[17]**

OR

Q6) What is tool steel? Mention a few examples of hot work tool steel & cold work tool steel with their compositions, properties & applications. **[17]**

P.T.O.

Q7) What is alpha brass? Why 70:30 brass is a most popular in industries? Justify this mentioning its properties along with applications. **[18]**

OR

Q8) Write short note on (any three) **[18]**

i) Babbits

ii) Bronzes

iii) Alnico

iv) Naval brass

v) Bearing materials

Total No. of Questions : 8]

SEAT No. :

P677

[Total No. of Pages : 2

[5869]-316

S.E (Production Engineering and Industrial Engineering)/(production engineering) (Sandwich)

ELECTRICAL AND ELECTRONICS ENGINEERING

(2019 Pattern) (Semester - IV)

Time : 2½ Hours] ***[Max. Marks : 70***

Instructions to the candidates:

1) ***Attempt Q.1 or Q.2, Q.3 or Q.4, Q5 or Q.6, Q.7 or Q.8***
2) ***Neat diagrams must be drown wherever neccessary.***
3) ***Figures to the right indicate full marks.***
4) ***Assueme suitable data if necessary.***

Q1) a) Explain I-V characteristics of SCR. **[5]**

b) Give specifications and applications of SCR. **[6]**

c) Draw and explain the O/P characteristics of MOSFET. **[6]**

OR

Q2) a) Explain working, disadvantages and advantages of GTO. **[5]**

b) Explain I-V characteristics of DIAC and TRIAC. **[6]**

c) Draw and explain the O/P characteristics of IGBT. **[6]**

Q3) a) Explain working of IC-555 as a astable multivibrator. **[5]**

b) Define fixed and variable voltage regulator. Explain the adjustable voltage regulation using LM317. **[6]**

c) Explain the working of digital to analog converter. **[6]**

OR

Q4) a) Explain working of IC-555 as a monostable multivibrator. **[5]**

b) Explain working of voltage controlled oscillator by using IC566. **[6]**

c) State ideal and practical characteristics of operational amplifier. **[6]**

P.T.O.

Q5) a) Define programmable logic controller and explain it's types. **[8]**

b) Explain input and output devices with suitable example. **[6]**

c) State advantages of programmable logic controller. **[4]**

OR

Q6) a) Explain input and output module of programmable logic controller. **[8]**

b) What are different applications of programmable logic controller. **[6]**

c) State various features of PLC. **[4]**

Q7) a) Draw interfacing diagram of LED with Arduino board and also write an algorithm to link the LED. **[8]**

b) Explain following functions used to handle GPIO in AT mega 328P arduino board with suitable example. **[6]**

i) Pin Mode ( )

ii) Digital Write ( )

iii) Digital Read ( )

c) Enlist significant features of AT mega 328P microcontroller. **[4]**

OR

Q8) a) Draw block diagram of data aquistion system and briefly explain function of each block. **[8]**

b) State any 6 features of Arduino IDE. **[6]**

c) Compare microprocessor with microcontroller by significant points. **[4]**

✠ ✠ ✠

Total No. of Questions : 8]

SEAT No. :

P678

[Total No. of Pages : 4

[5869]-317

S.E. (Production Engineering Sandwich)

THEORY OF MACHINES

(2019 Pattern) (Semester - IV)

Time : 2½ Hours] *[Max. Marks : 70*

Instructions to the candidates:

1) ***Solve Q1 or Q2, Q3 or Q4, Q5 or Q6, Q7 or Q8.***
2) ***Neat diagrams must be drawn whenever necessary.***
3) ***Figure to the right indicate full marks.***
4) ***Assume suitable data if necessary.***
5) ***Use of logarithmic tables, slide rules, mollier charts, electronic pocket calculator and steam table is allowed.***

Q1) a) With the help of supporting sketch, explain the concept of Body centrode and Space centrode. **[6]**

b) In the toggle mechanism shown in figure, the slider D is constrained to move on a horizontal path. The crank OA is rotating at 180 rpm anticlockwise. Various link dimensions are: OA = 180 mm, CB = 240 mm, AB = 360 mm, BD = 540 mm. For the given configuration find

i) Velocity of slider D

ii) Angular velocity of link AB and BD. Use relative velocity method. **[12]**

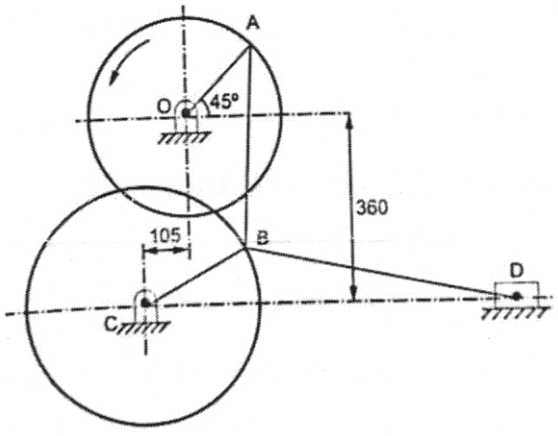

(All dimensions are in mm)

OR

P.T.O.

Q2) a) State and prove the Kennedy's Theorem. **[8]**

b) A mechanism as shown in fig. has following dimensions: OA = 200 mm, AB = 1.5 m, BC = 600 mm, CD = 500 mm and BE = 400 mm. If crank OA rotate uniformly at 400 rpm anticlockwise, find **[10]**

i) Velocity of D

ii) Angular velocity of link BC. Use Instantaneous centre of rotation method.

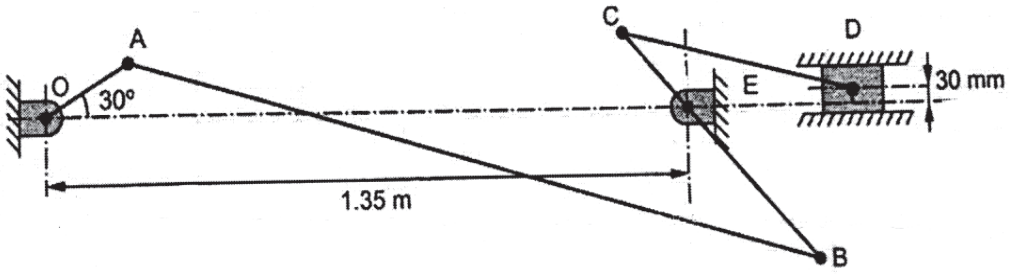

Q3) The dimensions of differential stroke engine mechanism are shown in figure. Length of links are as follows: OA = 90 mm, QB = 42 mm, AC=BC= 180 mm, CP= 120 mm. OA and QB are geared together so that the QB turns at twice the speed of OA and in opposite direction of OA. Find for given configuration, velocity, acceleration of piston and angular velocity, angular acceleration of CP if OA rotate at 720 rpm clockwise. **[17]**

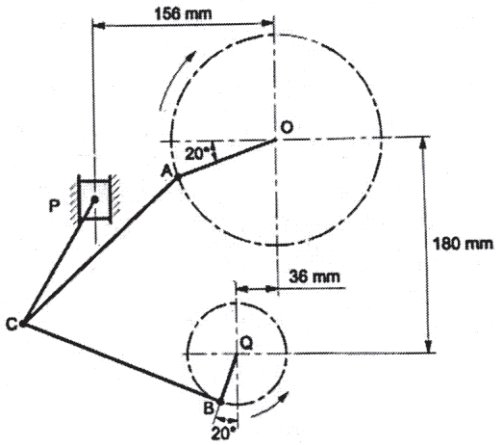

OR

Q4) a) The stroke of steam engine is 15 cm and connecting rod is 30 cm in length. Determine analytically velocity and acceleration of piston when crank has made 45° measured from I.D.C. position and rotate at 600 rpm. Also determine angular velocity and angular acceleration of connecting rod. **[8]**

b) In a slider crank mechanism, crank radius is 200 mm and connecting rod length is 800 mm. The crank is rotating at uniform speed of 480 rpm. Using klein's construction, find **[9]**

i) Acceleration of slider

ii) Acceleration of middle point of connecting rod

iii) Angular acceleration of connecting rod when the crank has turned through 45° from I.D.C.

Q5) a) Discuss the various materials used for belt manufacturing. **[8]**

b) Two parallel shafts, whose centre lines are 4.8 m apart, are connected by open belt drive. The diameter of the larger pulley is 1.5 m and that of smaller pulley 1 m. The initial tension in the belt when stationary is 3 kN. The mass of the belt is 1.5 kg/m length. The coefficient of friction between the belt and the pulley is 0.3. Taking centrifugal tension into account, calculate the power transmitted, when the smaller pulley rotates at 400 r.p.m. **[10]**

OR

Q6) a) Compare flat belt drive and V-belt drive in detail. **[6]**

b) An open belt running over two pulleys 240 mm and 600 mm diameter connects two parallel shafts 3 metres apart and transmits 4 kW from the smaller pulley that rotates at 300 rpm. Coefficient of friction between the belt and the pulley is 0.3 and the safe working tension is 10 N per mm width. **[12]**

Determine :

i) Minimum width of the belt,

ii) Initial belt tension, and

iii) Length of belt required.

Q7) a) Explain with neat sketch working of internal expanding shoe brake also give its applications. **[8]**

b) A single shoe brake as shown in figure has a brake drum diameter of 1 m and angle of contact is 30°. It takes 280 Nm torque at 300 rpm. The coefficient of friction is 0.35. Determine the required force P to be applied when the rotation of drum is **[9]**

i) Clockwise

ii) Anticlockwise. Also find value of a fulcrum distance 'a' from tangential braking force for self locking.

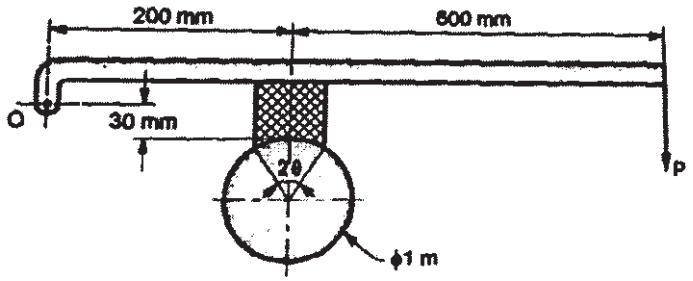

OR

Q8) a) Describe with the help of neat sketch construction and working of prony brake dynamometer. **[8]**

b) The hand operated brake shown in figure is fitted to a shaft carrying a flywheel of mass 400 kg with radius of gyration 45 cm running at 360 rpm. **[9]**

Determine:

i) Torque applied due to pull of 100 N

ii) Number of revolutions of flywheel before it is brought to rest

iii) Time required to bring the wheel to rest

Take coefficient of friction = 0.2

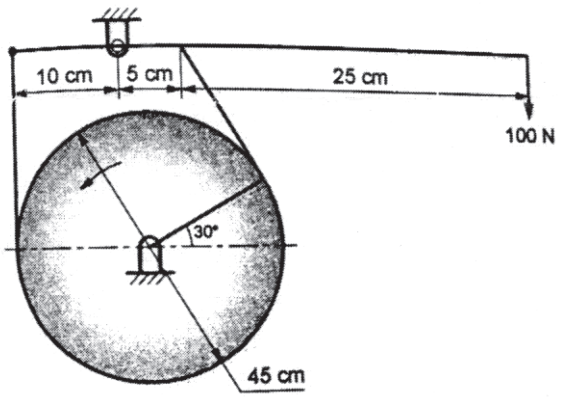

⌘⌘⌘

Total No. of Questions : 8]

SEAT No. : ____

P2298

[Total No. of Pages : 3

[5869]-318

S.E. (Production Engineering and Industrial Engineering/ Production Engineering (Sandwich))

DESIGN OF MACHINE ELEMENTS

(2019 Pattern) (Semester - IV) (211092)

Time : 2½ Hours] ***[Max. Marks : 70***

Instructions to the candidates:

1) ***Answer Q.1 or Q.2, Q.3 or Q.4, Q.5 or Q.6, Q.7 or Q.8.***
2) ***Use of scientific calculator is allowed.***
3) ***Figures to the right side indicate full marks.***

Q1) a) Discuss the different types of threads used in power screw. **[6]**

b) Define lead angle, major diameter, lead, and pitch in terms of power screw. **[4]**

c) The cutter of a broaching machine is pulled by square threaded screw of 55 mm external diameter and 10 mm pitch. The operating nut takes the axial load of 400 N on a flat surface of 60 mm and 90 mm internal and external diameters respectively. If the coefficient of friction is 0.15 for all contact surfaces on the nut, determine the power required to rotate the operating nut when the cutting speed is 6 m/min. Also find the efficiency of the screw. **[8]**

OR

Q2) a) A vertical two start square threaded screw of a 100 mm mean diameter and 20 mm pitch supports a vertical load of 18 kN. The axial thrust on the screw is taken by a collar bearing of 250 mm outside diameter and 100 mm inside diameter. Find the force required at the end of a lever which is 400 mm long in order to lift and lower the load. The coefficient of friction for the vertical screw and nut is 0.15 and that for collar bearing is 0.20. **[8]**

b) Define core diameter, minor diameter, left hand screw, and Multiple thread screw in terms of power screw. **[4]**

c) What is meant by power screw? Give its advantages, disadvantages and applications. **[6]**

P.T.O.

Q3) a) What is meant by springs? Explain different types of springs. **[6]**

b) A compression coil spring made of an alloy steel is having the following specifications:

Mean diameter of coil = 50 mm ; Wire diameter = 5 mm ; Number of active coils = 20. If this spring is subjected to an axial load of 500 N; calculate the maximum shear stress (neglect the curvature effect) to which the spring material is subjected. **[4]**

c) A helical spring is made from a wire of 6 mm diameter and has outside diameter of 75 mm. If the permissible shear stress is 350 MPa and modulus of rigidity 84 kN/mm^2, find the axial load which the spring can carry and the deflection per active turn. **[8]**

OR

Q4) a) Explain the Surge in Springs. **[6]**

b) Give any 2 applications of springs and any 2 material required for manufacturing of springs. **[4]**

c) Design a spring for a balance to measure 0 to 1000 N over a scale of length 80 mm. The spring is to be enclosed in a casing of 25 mm diameter. The approximate number of turns is 30. The modulus of rigidity is 85 kN/mm^2. Also calculate the maximum shear stress induced. **[8]**

Q5) a) What is spur gear? Enlist any 2 applications of spur gear and Give its detail classification. **[9]**

b) A bronze spur pinion rotating at 600 r.p.m. drives a cast iron spur gear at a transmission ratio of 4:1. The allowable static stresses for the bronze pinion and cast iron gear are 84 MPa and 105 MPa respectively. The pinion has 16 standard 20º full depth involute teeth of module 8 mm. The face width of both the gears is 90 mm. Find the power that can be transmitted from the standpoint of strength. **[8]**

OR

Q6) a) Define the terms in respective of spur gears: Module, Addendum, Pitch circle diameter, and Backlash. **[4]**

b) Discuss the Causes of Gear Tooth Failure. **[5]**

c) The following particulars of a single reduction spur gear are given: Gear ratio = 10:1; Distance between centres = 660 mm approximately; Pinion transmits 500 kW at 1800 r.p.m.; Involute teeth of standard proportions (addendum = m) with pressure angle of 22.5°; Permissible normal pressure between teeth = 175 N per mm of width. **[8]**

Find :

i) The nearest standard module if no interference is to occur;

ii) The number of teeth on each wheel;

iii) The necessary width of the pinion; and

iv) The load on the bearings of the wheels due to power transmitted.

Q7) a) What are rolling contact bearings? Discuss their advantages over sliding contact bearings. **[4]**

b) Write short note on classifications and different types of antifriction bearings. **[5]**

c) A shaft rotating at constant speed is subjected to variable load. The bearings supporting the shaft are subjected to stationary equivalent radial load of 3 kN for 10 per cent of time, 2 kN for 20 per cent of time, 1 kN for 30 per cent of time and no load for remaining time of cycle. If the total life expected for the bearing is 20×10^6 revolutions at 95 per cent reliability, calculate dynamic load rating of the ball bearing. **[8]**

OR

Q8) a) Where are the angular contact and self-aligning ball bearings used? Draw neat sketches of these bearings. **[7]**

b) How do you express the life of a bearing? What is an average or median life? **[6]**

c) Explain how the following factors influence the life of a bearing : **[4]**

i) Load ii) Speed

iii) Temperature iv) Reliability

⌘⌘⌘

Total No. of Questions : 8]

SEAT No. :

P679

[Total No. of Pages : 2

[5869]-319
S.E. (Production Engineering)
ADVANCED MATERIALS
(2019 Pattern) (Semester - IV) (211093)

Time : 2½ Hours] *[Max. Marks : 70*

Instructions to the candidates:

1) ***Answer Q.1 or Q.2, Q.3 or Q.4, Q.5 or Q.6, Q.7 or Q.8.***
2) ***Assume suitable data if necessary.***
3) ***Figures to the right indicate full marks.***
4) ***Draw neat figures whenever necessary.***
5) ***Use of scientific calculators is allowed.***
6) ***Use of cell phone is prohibited in the examination hall.***

Q1) a) Which are the common magnetic materials? **[6]**

b) What are the limitations of nanomaterials? **[6]**

c) What is vulcanization? **[6]**

OR

Q2) a) Which are the important properties desired from electrical materials? **[6]**

b) Which are the key properties of nanomaterials? **[6]**

c) How are polymers classified on the basis of their structure? **[6]**

Q3) a) How are magnetic materials classified based on relative permeability? **[6]**

b) What do you mean by carbon nanotubes? **[6]**

c) What is a biodegradable polymer? Give examples. **[5]**

OR

Q4) a) Where are semiconductors used? **[6]**

b) Give one example each of zero-, one- and two-dimensional nanomaterials? **[6]**

c) What do you mean by Engineering plastics? Give examples. **[5]**

P.T.O.

Q5) a) What do you mean by calandering of elastomers? **[9]**

b) Write note on: Mixing mechanisms of rubber/ elastomers. **[8]**

OR

Q6) a) Which are the manufacturing techniques used for processing of rubbers? **[9]**

b) Write note on: Extrusion of Rubber or elastomer. **[8]**

Q7) a) What do you understand by "Ceramics"? Distinguish between "Traditional" and "Advanced" ceramics. **[9]**

b) Explain with sketch slip casting for Ceramic processing. **[9]**

OR

Q8) a) What is mean by composites? Which are the attractive features of composites make them suitable for special areas of applications? **[9]**

b) Explain with sketch any one technique of metal matrix composite processing. **[9]**

❄ ❄ ❄

Total No. of Questions : 8]

SEAT No. :

P680

[Total No. of Pages : 2

[5869]-320

S.E. (Production) (S/W) (Production & Industrial Engineering)

INDUSTRIAL ENGINEERING & MANAGEMENT

(2019 Pattern) (Semester - IV) (211094)

Time : 2½ Hours] *[Max. Marks : 70*

Instructions to the candidates :

1) ***Solve Q1 or Q2, Q3 or Q4, Q5 or Q6, Q7 or Q8.***
2) ***Neat diagrams must be drawn wherever necessary.***
3) ***Figures to the right side indicate full marks.***
4) ***Assume suitable data if necessary.***

Q1) a) Discuss the characteristics of Successful Entrepreneurs. **[5]**

b) What is the Importance of Good Communication Skills? Discuss. **[6]**

c) Discuss the Basic element of Business plans. **[6]**

OR

Q2) a) Discuss the factors that every entrepreneur must consider when selecting a perfect business location. **[9]**

b) What are the different types of Financial Analysis? Discuss any two. **[8]**

Q3) a) Define Industrial Engineering. Discuss any four Technique of Industrial Engineering. **[8]**

b) What are the benefits of increased productivity? **[9]**

A company collected following information for month of May 2019 and June 2019

Item	May 2019	June 2019
Output (Rs.)	10,00,000	12,00,000
Material input (Rs.)	2,50,000	3,50,000
Labour input (Rs.)	3,00,000	3,25,000
Capital (Rs.)	3,50,000	3,50,000
Power consumed (Rs.)	15,000	20,000

Calculate the following for both the months :

i) Total productivity ii) Labor productivity and iii) Material productivity

Comment on the results obtained.

P.T.O.

OR

Q4) a) Write Short note on following Productivity improvement techniques **[8]**

i) Muda elimination

ii) Poka-Yoke

iii) SMED

b) What are the different methods of Job evaluation? **[9]**

Q5) a) Discuss the Steps under Method Study. **[9]**

b) Discuss the Applications of String diagram with example. **[9]**

OR

Q6) a) Draw and explain the Process Chart Symbols and give one example of each. **[10]**

b) Write short notes on Cycle Graph and Chronocycle Graph. **[8]**

Q7) a) Define Time study and explain different steps of Time study. **[8]**

b) Problem: A job has been sub-divided into five elements. The time for each element and respective rating are given below : **[10]**

Element	Observed Time (minute)	Rating (Percentage, %)
1	0.7	80
2	0.8	100
3	1.3	120
4	0.5	90
5	1.2	100

Calculate the normal and standard time for each element and for the job if the allowance is 15%.

OR

Q8) a) Discuss the four major variables which affect the time to perform manual motions. **[8]**

b) How to calculate Normal time and Standard time. **[6]**

c) Write short note on Maynard Operation Sequence Technique (MOST). **[4]**

Total No. of Questions : 8]

SEAT No. :

P681

[Total No. of Pages : 2

[5869]-329
S.E. (Production Sandwich)
MANUFACTURING PROCESS - II
(2019 Pattern) (Semester - IV) (211121)

Time : 2½ Hours] ***[Max. Marks : 70***

Instructions to the candidates:

1) ***Answer Q.1 or Q.2, Q.3 or Q.4, Q.5 or Q.6, Q.7 or Q.8.***
2) ***Neat diagrams must be drawn whenever necessary.***
3) ***Figures to the right indicate full marks.***
4) ***Assume suitable data, if necessary.***

Q1) a) Explain different types of coordinate systems used in NC/CNC operations. **[10]**

b) FMS introduces flexibility in every facets of manufacturing. Explain in details. **[7]**

OR

Q2) a) For Machining Centre, Explain the following: **[12]**

i) Principles, Working & Advantages

ii) Applications & Parts Programming

b) Explain the following codes: **[5]**

i) G 03

ii) G 63

iii) M 06

vi) M 09

v) M 30

Q3) a) Explain with neat sketch Injection Moulding Process with its Advantages & Applications. **[10]**

b) Explain the Extrusion Process for thermoplastic Material. **[8]**

OR

P.T.O.

Q4) a) Explain in details of Blow Moulding Process with its Advantages & Applications. **[10]**

b) Explain the Thermoforming Process with its Applications. **[8]**

Q5) a) Explain with neat sketch EBM. State the Advantages, Limitations and Applications. **[9]**

b) Explain with neat sketch PAM. State the Advantages, Limitations and Applications. **[8]**

OR

Q6) a) What is the function of electrolyte in ECM? List the common electrolyte used in ECM. **[5]**

b) Explain the Principle with neat sketch of following (Any Two) **[12]**

i) EDM

ii) AJM

iii) USM

Q7) a) Explain the following elements of jig & fixture (Any Two) **[12]**

i) Indexing device

ii) Clamping device

iii) Tool guide

b) Describe factors considered for designing jig & fixture. **[6]**

OR

Q8) a) Explain general guidelines & procedure for design of fixtures. **[13]**

b) Explain fool-proofing for jig & fixture. **[5]**



Total No. of Questions : 8]

SEAT No. :

P682

[Total No. of Pages : 2

[5869] - 333
S.E. (Printing Engineering)
INTRODUCTION TO PRINTING PROCESSES
(2019 Pattern) (Semester - III)

Time : 2½ Hours] *[Max. Marks : 70*

Instructions to the candidates:

1) ***Attempt Q.No.1 or Q.No.2, Q.No.3 or Q.No.4, Q.No.5 or Q.No.6, Q.No.7 or Q.No.8.***
2) ***Figures to the right indicate full marks.***
3) ***Assume suitable data, if necessary.***
4) ***Neat diagrams must be drawn wherever necessary.***

Q1) a) Explain the material required for screen printing and explain the purpose of each material. **[6]**

b) Explain the squeeze angle types and its purpose in screen printing. **[6]**

c) Explain in brief squeeze hardness. **[5]**

OR

Q2) a) Explain in brief the frame size selection criteria for screen printing process. **[6]**

b) List down and explain in brief the screen frame purpose and requirement. **[5]**

c) Explain in brief the squeeze selection criteria for screen printing applications. **[6]**

Q3) a) Explain in brief their Polyester mesh advantages and disadvantages. **[6]**

b) Explain in brief the mesh selection criteria for screen printing applications. **[6]**

c) Compare the role of thread diameter with ink transfer in screen printing process. **[6]**

OR

Q4) a) Differentiate between a silk mesh with stainless steel mesh. **[6]**

b) Compare the role of thread diameter with fabric open area, color and ink film thickness in screen printing process. **[6]**

c) Explain in brief the geometry in screen printing process. **[6]**

P.T.O.

Q5) a) List down the fabric stretching methods and explain in brief the fabric stretching methods. **[6]**

b) Explain in brief the steps required in preparation for mechanical screen stretching process. **[6]**

c) Explain in brief the steps required in preparation for pneumatic screen stretching process. **[5]**

OR

Q6) a) Explain in brief screen angle and halftone process for screen printing process. **[6]**

b) Explain in brief the frame selection criteria for screen making. **[5]**

c) Compare pneumatic and mechanical fabric stretching methods. **[6]**

Q7) a) Steps in making direct screen stencil making process. **[6]**

b) Explain in brief the exposure time calculation method for screen stencil making process. **[6]**

c) Compare under and over exposure and optimum exposure for screen stencil making process. **[6]**

OR

Q8) a) Compare direct and Indirect screen stencil making process. **[6]**

b) Compare Indirect with Direct/ indirect screen stencil making process. **[6]**

c) Explain in brief the direct screen stencil making process. **[6]**

Total No. of Questions : 8]

SEAT No. :

P683

[Total No. of Pages : 2

[5869]-334

S.E. (Printing Engineering)

MATERIAL SCIENCE IN PRINTING AND PACKAGING

(2019 Pattern) (Semester - III) (208282)

Time : 2½ Hours] *[Max. Marks : 70*

Instructions to the candidates:

1) ***Solve Q.No.1 or Q.No.2, Q.No.3 or Q.No.4, Q.No.5 or Q.No.6, Q.No.7 or Q.No.8.***
2) ***Neat diagrams must be drawn wherever necessary.***
3) ***Figures to the right side indicate full marks.***
4) ***Assume suitable data if necessary.***
5) ***Use of electronic pocket calculator is allowed.***

Q1) Why it is important to identify machine and cross direction of paper? State any specific applications in which cross and machine direction of paper plays important role. **[18]**

OR

Q2) a) What is viscosity of ink? State the procedure to measure viscosity of liquid ink. Also explain significance of viscosity if ink in printing. **[9]**

b) Explain following terms : **[9]**

i) Pigment.

ii) Resins.

iii) Additives.

iv) Varnish.

Q3) What is composition of ink? Explain in details ingredients and function of each ingredient used and application for paste and liquid inks. **[17]**

OR

Q4) Explain the following with diagram :

a) Cobb testing. **[9]**

b) Top and bottom side of paper. **[8]**

P.T.O.

Q5) State any 2 types of following materials with its properties and applications **[18]**

a) BOPP.

b) PP.

OR

Q6) Corrugated fiber board can be made with various types of ply flutes and no of layers. Explain all types with diagrams in details. **[18]**

Q7) Resins are very important ingredient of inks : Justify this statement with properties of resins and its function in the ink. **[17]**

OR

Q8) Why is viscosity of ink an significant property? Explain effect of viscosity on printability. **[17]**



Total No. of Questions : 8]

SEAT No. :

P684

[Total No. of Pages : 2

[5869]-335

S.E. (Printing Engineering)

PRINTING DIGITAL ELECTRONICS

(2019 Pattern) (Semester - III) (208283)

Time : 2½ Hours] *[Max. Marks : 70*

Instructions to the candidates:

1) ***Solve Q1 or Q2, Q3 or Q4, Q5 or Q6, Q7 or Q8.***
2) ***Figures to the right indicate full marks.***
3) ***Assume suitable data, if necessary.***
4) ***Neat diagrams must be drawn wherever necessary.***
5) ***Use of electronic pocket calculator is allowed.***

Q1) Perform following. **[18]**

a) 1's complement of 1011110 =

b) 2's complement of 1010111

c) 10101×101

d) $1111 \div 10$

e) Solve (5-7) using 2's complement method

f) Add 10111 and 1111

g) Convert the 45 and 13 in BCD and add them in BCD form.

h) 110011 – 100011

i) 111 00 + 11011

OR

Q2) a) Draw the logical expression for the following given expression **[4]**

$$Y = \left(B \cdot \overline{A}\right) + \left(A \oplus B\right)$$

b) Design half adder and half subtractor with the help of K-Map. **[8]**

c) Describe the design of one bit magnitude comparator using K-Map. **[6]**

P.T.O.

Q3) Draw the clocked RS flip flop circuit using NAND gates explain its function table and timing diagram. **[17]**

OR

Q4) a) Differentiate asynchronous and synchronous counters. **[6]**

b) Differentiate Combinational and sequential circuits. **[6]**

c) Draw the circuit for MOD 4 counter using JK flips. **[5]**

Q5) What is ADC? Describe its specification and explain any one type of ADC with neat diagram. **[18]**

OR

Q6) a) Compare PAL and PLA. **[6]**

b) Explain any SRAM, DRAM, EPROM, EEPROM memories. **[6]**

c) Describe DAC in detail. **[6]**

Q7) a) Explain block diagram of digital computer. **[8]**

b) Describe any types of input devices of computer. **[9]**

OR

Q8) Elucidate any 2 uses of sequential and combinational circuits in the field of printing. **[17]**

⌘⌘⌘

Total No. of Questions : 8]

SEAT No. : ____

P685

[Total No. of Pages : 2

[5869]-336

S.E. (Printing Engineering and Graphic Communication)

ELECTRICAL MACHINES AND UTILIZATION

(2019 Pattern) (Semester - IV)

Time : 2½ Hours] ***[Max. Marks : 70***

Instructions to the candidates:

1) ***Attempt Q.No.1 or Q.No. 2, Q.No.3or Q.No.4, Q.No.5 or Q. No.6, Q.No.7 or Q.No.8.***
2) ***Figures to the right indicate full marks.***
3) ***Assume suitable data, if necessary.***
4) ***Neat diagrams must be drawn wherever necessary.***

Q1) a) Draw Torque-Slip characteristic with modes of operation. **[9]**

b) An 18.65 kW, 4 pole, 3 phase, 50 Hz Induction motor has friction and windage losses are 2.5% of output. The full load slip is 4% Calculate rotor copper loss, rotor input and shaft torque of the motor. **[9]**

OR

Q2) a) Explain any one method of speed control of 3 phase induction Motor.

[9]

b) The power input to a 3 phase induction motor is 60kW. The stator losses are 1 kW. Find the mechanical power developed and rotor copper loss per phase. **[9]**

Q3) a) Explain types of lighting scheme. **[9]**

b) Find total saving in electrical load and percentage increase in illumination if instead of using twelve 150 W tungsten lamps, we use twelve 80 W florescent tubes. Assume, 1) Choke loss of 25% of rated lamp wattage. 2) Average luminous efficiency throughout life for each lamp is 15 lm/W and for each tube 40lm/W. 3) Coefficient of utilization remains the same in both cases. **[8]**

OR

P.T.O.

Q4) a) Write short note on flood lighting design. **[9]**

b) Explain requirement of good lighting scheme. **[8]**

Q5) a) Explain Vertical core type induction furnace. **[9]**

b) Explain high frequency eddy-current heating. **[9]**

OR

Q6) a) A slab of insulating material 150 cm^2 in area and 1 cm thick is to be heated by direct heating. The power required is 400 W at 30 MHz. Material has relative permittivity of 5 and power factor 0.05. Determine the necessary voltage needed. Assume absolute permittivity is 8.854×10^{-12} F/m. **[9]**

b) Write short note on Indirect Arc furnace. **[9]**

Q7) a) Explain various types of relays **[9]**

b) Explain difference between individual and group drive. **[8]**

OR

Q8) a) Explain selection of motors depending on load characteristics. **[9]**

b) Write short note on Photo Cell. **[8]**

Total No. of Questions : 8]

SEAT No. :

P686

[Total No. of Pages : 2

[5869]-337

S.E. (Printing Engineering)

FINISHING TECHNIQUES

(2019 Pattern) (Semester - IV)

Time : 2½ Hours] *[Max. Marks : 70*

Instructions to the candidates:

1) ***Attempt Q.No. 1 or Q.No. 2, Q.No. 3 or Q.No. 4, Q.No. 5 or Q.No. 6, Q.No. 7 or Q.No. 8.***
2) ***Figures to the right indicate full marks.***
3) ***Assume suitable data if necessary.***
4) ***Neat diagrams must be drawn wherever necessary.***

Q1) a) Compare buckle and knife folding mechanism with suitable diagram. **[6]**

b) Explain in brief various folding schemes with suitable diagram. **[6]**

c) Describe in detail a Collating marks. **[5]**

OR

Q2) a) Explain in brief combination folding machine. **[6]**

b) Describe in detail a Cutting Machine. **[5]**

c) Compare gathering and in setting process with suitable diagram. **[6]**

Q3) a) Compare hot melt adhesives and water based adhesives. **[6]**

b) Explain in brief the factors governing the choice of adhesives. **[6]**

c) Describe in detail a securing materials. **[6]**

OR

Q4) a) Explain in brief factors to be considered while selecting a adhesives. **[6]**

b) Describe in detail the speed of setting of adhesive. **[6]**

c) Explain in brief the effect of wet adhesives on paper and board. **[6]**

P.T.O.

Q5) a) Explain in brief different lamination methods. **[6]**

b) Compare hot and cold foil stamping. **[6]**

c) Describe in detail a utility operations. **[5]**

OR

Q6) a) Compare wet lamination with dry lamination process. **[6]**

b) Describe in detail a calendar rimming process. **[5]**

c) Compare embossing and foil stamping process. **[6]**

Q7) a) Calculate papers for endpapers in double crown size for 5000 books in crown 8vo size with 1%. **[6]**

b) Estimate boards of 45Dkg in RA1 size for 10000 books in A5 size. **[6]**

c) Calculate cost of papers for endpapers in 2RA0 size with 90 gsm @ Rs. 70 per kg for 10000 books in A5 size. **[6]**

OR

Q8) a) Calculate papers for endpapers in Quad royal size for 10000 books in royal 8vo size with 1% wastage allowances. **[6]**

b) Calculate boards of 45Dkg of 22"×28" for 1000 books in A5 size. **[6]**

c) Calculate cost of endpapers in RA1 size with 80 GSM @ Rs. 70 per Kg for 2000 books in A5 size having 240 pages with 2% wastage allowance. **[6]**

⌘⌘⌘

Total No. of Questions : 8]

SEAT No. :

P687

[Total No. of Pages : 2

[5869] - 338

S.E. (Printing Engineering)

INTRODUCTION TO PACKAGING CONCEPTS

(208287) (2019 Pattern) (Semester - IV)

Time : 2½ Hours] *[Max. Marks : 70*

Instructions to the candidates :

1) ***Solve Q.1 or Q.2, Q.3 or Q.4, Q.5 or Q.6 and Q.7 or Q.8.***
2) ***Figures to the right indicate full marks.***
3) ***Neat diagrams must be drawn wherever necessary.***
4) ***Assume suitable data, if necessary.***
5) ***Use of electronic pocket calculator is allowed.***

Q1) a) Why is brand loyalty important in packaging. **[9]**

b) Explain psycho-graphic segmentation in detail with examples. **[9]**

OR

Q2) a) Explain demographic segmentation in detail with examples. **[9]**

b) How retail marketing has extreme importance. **[9]**

Q3) a) Explain the effect of barrier properties on product. **[9]**

b) Write down chemical characteristics of packaging. **[8]**

OR

Q4) a) How packaging is providing protection to product from biological effects. **[8]**

b) Explain plastic characteristics. **[9]**

Q5) a) What is the significance of testing for maintaining quality standards. **[9]**

b) Write down different physical test required to check quality of package. **[9]**

OR

P.T.O.

Q6) a) Explain different packaging standards used to manufacture or maintain quality in packaging products. **[9]**

b) Explain conditioning in packaging. **[9]**

Q7) a) What improvements needs to be done for packaging waste. **[8]**

b) What is the scope and growth of packaging industry in India. **[9]**

OR

Q8) a) What is the packaging scenario of world and India. **[8]**

b) Explain Indian packaging industry user prospect with share of rigid and flexible packaging market. **[9]**

▽▽▽▽

Total No. of Questions : 8] **SEAT No. :**

P688 **[Total No. of Pages : 2**

[5869]-339

S.E. (Printing Engineering)

MICROPROCESSOR AND MICROCONTROLLER TECHNIQUES IN PRINTING

(2019 Pattern) (Semester - IV)

Time : 2½ Hours] ***[Max. Marks : 70***

Instructions to the candidates:

1) ***Solve Q1 or Q2, Q3 or Q4, Q5 or Q6, Q7 or Q8.***
2) ***Figures to the right indicate full marks.***
3) ***Assume suitable data, if necessary.***
4) ***neat diagrams must be drawn wherever necessary.***
5) ***Use of electronic pocket calculator is allowed.***

Q1) Explain the internal architecture of 8051 microcontroller. **[18]**

OR

Q2) a) Explain the PSW flag register of 8051 microcontroller. **[9]**

b) Describe the RAM and ROM memory organization in 8051 microcontroller **[9]**

Q3) Explain the addressing modes used in 8051 microcontroller. **[17]**

OR

Q4) a) Write program to send number 44H to ports P1 and P2, using (a) their addresses (b) their names. **[5]**

b) Explain following instructions in microcontroller 8051 (Any six). **[12]**

i) MOV A.#32

ii) ADD (@B, @R0

iii) MOV R0.32

iv) SWAP A

P.T.O.

v) DIV AB

vi) MUL AB

vii) DEC @R0

viii) SUB R0, @R1

ix) MOVX A, @DPTr

Q5) Describe the operational mode of 8255. **[18]**

OR

Q6) a) Describe the block diagram of programmable IC 8253. **[9]**

b) Explain the handshaking signal of 8255. **[9]**

Q7) Explain the Interfacing of printer with 8085. **[17]**

OR

Q8) Explain the use of microprocessor and microcontroller in the printing industry. **[17]**

Total No. of Questions : 8]

SEAT No. :

P689

[Total No. of Pages : 2

[5869]-340
S.E. (Printing Engineering)
PRINT PRODUCTION TECHNIQUES
(2019 Pattern) (Semester - IV) (208289)

Time : 2½ Hours] *[Max. Marks : 70*

Instructions to the candidates :

1) ***Attempt Q.No. 1 or Q.No.2, Q.No.3 or Q.No.4, Q.No.5 or Q.No.6, Q.No.7 or Q.No.8.***
2) ***Figures to the right side indicate full marks.***
3) ***Assume suitable data, if necessary.***
4) ***Neat diagrams must be drawn wherever necessary.***

Q1) a) What are Screening methods. Explain the objective behind Screening. **[10]**

b) What are the advantages and disadvantages of screening methods. **[8]**

OR

Q2) a) What is Color Separations. Explain its objectives. **[10]**

b) What is N-Color Separations and where it is used. **[8]**

Q3) a) What is Screening Frequency? What are Screen Angles? **[10]**

b) Explain Plate marks verification in details. **[7]**

OR

Q4) a) What is Plate linearization curve and its requirement in prepress? **[10]**

b) Explain importance of Print Sequence. **[7]**

Q5) Explain two types of Dot gain and its causes. Also explain acceptable dot gain for various printing processes. **[18]**

OR

Q6) Calculate Hue Error and grayness for following readings **[18]**

Cyan	Magenta	Yellow
D1 = 0.07	D1 = 0.56	D1 = 1.07
D2 = 0.76	D2 = 1.08	D2 = 0.87
D3 = 1.22	D3 = 0.11	D3 = 0.23

P.T.O.

Q7) a) Explain Relation between Customer - Printer - Designer. **[9]**

b) Explain limitations of Printing Process and finishing on Design. **[8]**

OR

Q8) Explain various parameters of Post Press Consideration. **[17]**

Total No. of Questions : 8]

SEAT No. :

P2300

[Total No. of Pages : 3

[5869]-344
S.E. (Automation & Robotics Engineering)
ELECTRICAL TECHNOLOGY
(2019 Pattern) (Semester - III) (202521)

Time : 2½ Hours] ***[Max. Marks : 70***

Instructions to the candidates :

1) ***Solve Q.1 or Q.2, Q.3 or Q.4, Q.5 or Q.6, Q.7 or Q.8.***
2) ***Figures to the right indicate full marks.***
3) ***Neat diagrams must be drawn wherever necessary.***
4) ***Assume suitable additional data, if necessary.***
5) ***Use of non-programmable calculator is allowed.***

Q1) a) Draw the torque-slip characteristics of 3-phase induction motor and explain the nature of curve in the context of operation of motor. **[6]**

b) List the methods of speed control of 3-phase induction motor. Explain any one method in brief. **[6]**

c) Explain construction and working principle of a shaded pole Motor and write it's any two applications. **[6]**

OR

Q2) a) Explain the operation of a star-delta starter used for three phase induction motor with the help of neat schematic. **[6]**

b) Explain the construction and working of a linear induction motor with the help of suitable diagrams. Also state it applications. **[6]**

c) Can external resistance be added to squirrel cage rotor? State the reason. Also explain what would happen if synchronous speed is equal to rotor speed of three-phase induction motor. **[6]**

Q3) a) Derive the emf equation of an alternator. **[6]**

b) Explain the principle of working of a stepper motor. State its types based on construction and write any two applications. **[6]**

c) What is the duty cycle of a motor? State types of duty cycles for motors. **[5]**

P.T.O.

OR

Q4) a) Explain the construction of an alternator in details with the help of suitable diagrams. **[6]**

b) What is a servo motor? Explain construction and working of any one type of servo motors. **[6]**

c) Write the steps in selecting a particular motor for an industrial application. **[5]**

Q5) a) Briefly discuss the advantages and operational problems of HVDC transmission system. **[6]**

b) Explain the necessity of EHV transmission lines in power systems. **[6]**

c) Draw the line diagram of the typical HVDC transmission system and explain it in detail. **[6]**

OR

Q6) a) Classify the types of HVDC links. Discuss the applications of each of these links. **[6]**

b) Compare the DC and AC systems for transmission and distribution. **[6]**

c) Explain the typical Electric Supply System with the help of neat diagram. **[6]**

Q7) a) Write a short note on AC Servomotor used as an actuator in control system. **[6]**

b) Using the block diagram reduction technique, determine the transfer function C(s)/R(s). **[6]**

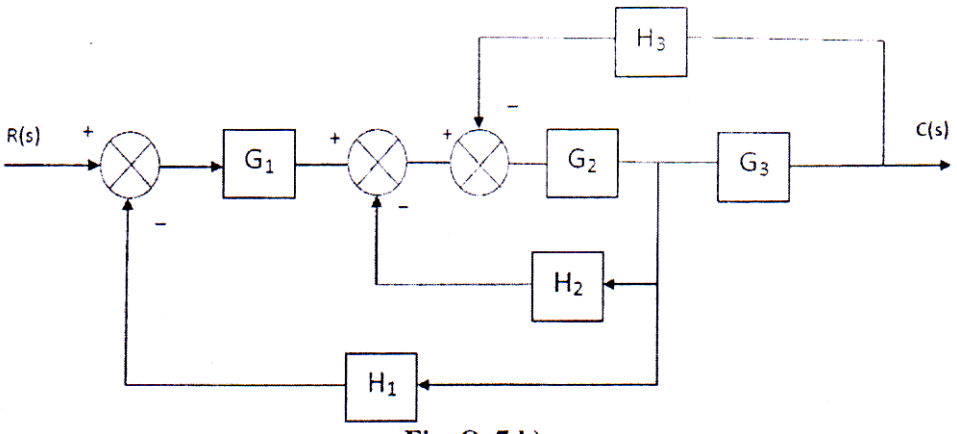

Fig. Q. 7 b)

c) An electrical system is represented using R, L and C as shown in the figure. Write the equations that describes the behaviour of this system in time domain and hence determine $E_o(s)/E_{in}(s)$. **[5]**

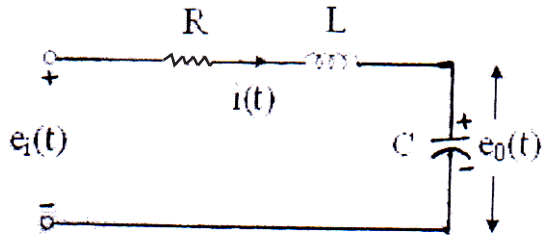

Fig. Q. 7 c)

m

OR

Q8) a) Using Mason's gain formula, determine the transfer function C(s)/R(s) for the signal flow graph shown in the figure. **[6]**

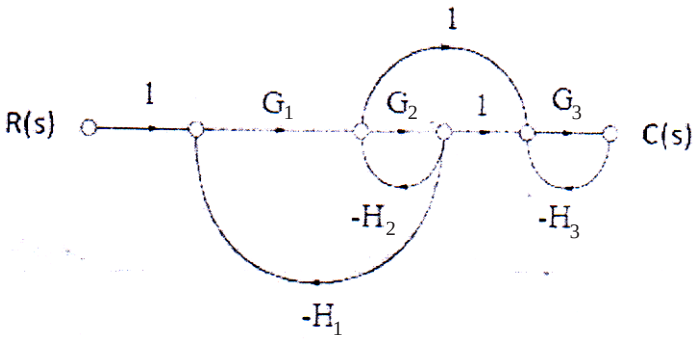

Fig. Q.8 a)

b) Derive the transfer function of a field controlled dc servomotor with usual notations. **[6]**

c) Distinguish between open loop and closed loop control system with significant points. **[5]**

Total No. of Questions : 8]

SEAT No. :

P987

[Total No. of Pages : 3

[5869]-345
S.E. (Automation & Robotics Engineering)
INDUSTRIAL ELECTRONICS
(2019 Pattern) (Semester - III) (202522)

Time : 2½ Hours] *[Max. Marks : 70*

Instructions to the candidates:

1) ***Sovle Q.1 or Q.2, Q.3 or Q.4, Q.5 or Q.6, Q.7 or Q.8.***
2) ***Figures to the right indicates full marks.***
3) ***Neat diagrams must be drawn wherever necessary.***
4) ***Assume suitable data, if necessary.***
5) ***Use of non-programmable calculator is allowd.***

Q1) a) Explain Bit type instructions- XIC, XIO, OTE, OTL, OTU, OSR. **[6]**

b) Explain the ON Delay Timer and OFF Delay Timer with timing diagram. **[6]**

c) Draw a ladder diagram for stepper motor control. **[6]**

OR

Q2) a) Explain ladder logic programming with symbols of PLC. **[6]**

b) List types of counters available in PLC. Explain any one. **[6]**

c) Draw the ladder diagram to verify the truth table of : **[6]**

i) XOR gate

ii) NAND gate

iii) NOR Gate.

Q3) a) Discuss about RS485 Serial Communication. **[6]**

b) Explain with neat diagram hierarchical level in Industrial Communication Networks. **[6]**

c) State the advantages of HMI. **[5]**

OR

Q4) a) Explain the types of HMI? **[6]**

b) Differentiate between SCADA and HMI. **[6]**

c) Explain the function of HMI. **[5]**

P.T.O.

Q5) a) What is Extrusion? Explain in detail types of extrusion? **[6]**

b) Develop PLC Programming Batch Process ladder logic program according to logic given below : **[6]**

i) When the start button is pushed, the process starts. On SV1 and SV2 if the level is low.

ii) Off SV1 and SV2, when the level is high. And on motor for 30 seconds to mix the ingredient A and ingredient B.

iii) Off Motor and on SV3 after 30 seconds

iv) Off SV3 when the level is low. This is the end of one batch. Again on SV1 and SV2.

v) The cycle continues till, stop push button is pressed.

vi) When stop/reset button is pushed, the process resets/stops. But when SV3 is on, stop button action should not affect the process.

c) Define recipe as per ANSI/ISA S88 standard. Explain its types. **[6]**

OR

Q6) a) Explain the process model for process of production of polyvinyl chloride by the polymerization of vinyl chloride monomer. **[6]**

b) Develop ladder logic program to control Continuous Stirred Tank Reactor in PLC. **[6]**

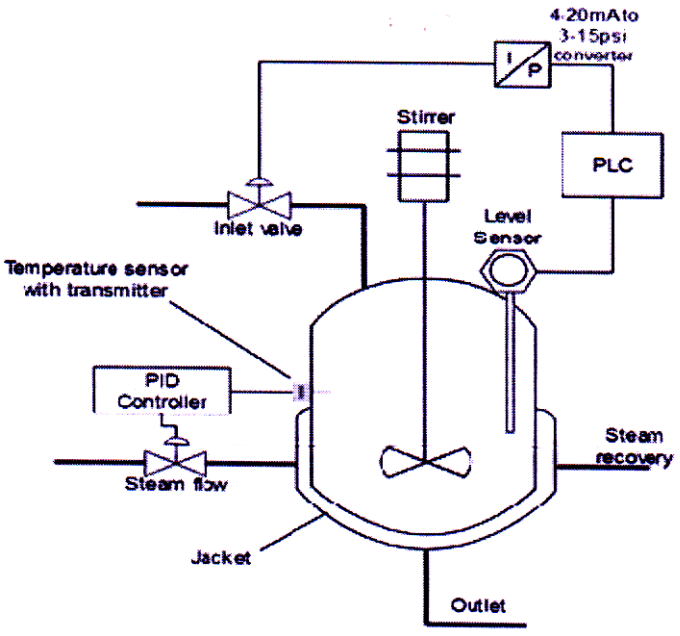

c) Describe the three types of control typically needed in batch manufacturing. **[6]**

Q7) a) What is logic family? Give comparisons between TTL, ECL and CMOS logic families. **[6]**

b) Define the following terms : **[6]**

i) Power Dissipation

ii) Propagation delay

iii) Noise Margin

c) Explain with a neat diagram CMOS inverter. **[5]**

OR

Q8) a) Compare CMOS and TTL logic family. **[6]**

b) Explain the concept of Tristate logic. **[6]**

c) Explain with a neat diagram CMOS NOR gate. **[5]**

⌘⌘⌘

Total No. of Questions : 8]

SEAT No. :

P988

[Total No. of Pages : 3

[5869]-348
S.E. (Automation and Robotics)
FLUID AND THERMAL ENGINEERING
(2019 Pattern) (Semester-IV)

Time : 2½ Hours] ***[Max. Marks : 70***

Instructions to the candidates:

1) ***Answer four questions from the following***
2) ***Draw neat labeled diagrams wherever necessary***
3) ***Figures to the right side indicate full marks.***
4) ***Use of non programmable electronic calculator is permitted.***
5) ***Assume suitable data, if necessary.***

Q1) a) Two tanks A and B have 70 m difference in water levels, and are connected by a pipe 0.25m diameter and 6 km long with 0.002 friction coefficient. The pipe is tapped at its mid-point to leak out 0.04 m^3/s flow rate. Minor losses are ignored. Determine the discharge leaving tank A? Find the discharge entering tank B? **[10]**

b) For a fluid flow through a pipe, show that maximum fluid velocity is twice the average velocity. Also derive Hagen Poiseuille's equation. **[8]**

OR

Q2) a) What are major and minor losses? Derive an expression for Darcy-Weisbach equation. **[8]**

b) Lubricating oil of specific gravity 0.85 and dynamic viscosity 0.1N-s/m^2 is pumped through a 3cm diameter pipe. If the pressure drop per meter length of the pipe is 15kPa, determine: **[10]**

i) The mass flow rate of oil in kg/min.

ii) The shear stress at the pipe wall.

iii) Reynolds number of the flow and

iv) The power required per 40 m length of the pipe to maintain the flow.

P.T.O.

Q3) a) Explain applications and selection criterion of valves in robotics and automation systems. **[8]**

b) Write a note on noise calculations and reduction. **[9]**

OR

Q4) a) Explain with a neat sketch following types of valves. **[8]**

i) Butterfly valve

ii) Digital valve

b) Write a note on **[9]**

i) Electric actuator

ii) Solenoid actuator and

iii) Digital actuator

Q5) a) An air compressor cylinder has 150mm bore and 150mm stroke and the clearance is 15%. It. operates between 1bar, 27°C and 5 bar. Take polytrophic exponent n=1.3 for compression and expansion processes find? **[10]**

i) Cylinder volume at the various salient points of in cycle.

ii) Flow rate in m^3/ min at 720 rpm

iii) The volumetric efficiency.

b) Draw combined indicator diagram for two stage compressors with imperfect intercooling. Derive expression for ideal intercooler pressure. **[7]**

OR

Q6) a) A single stage, single air compressor running at 1000 r.p.m delivers air at 25 bar. For this purpose the induction and free air conditions can be taken as 1.013 bar and 150°C and the free air delivery as 0.25 m^3/min. The clearance volume is 3% of the swept volume and the stroke bore ratio is 1:2:1 Take the index of compression and expansion as 1.3. calculate also the indicated power and the isothermal efficiency **[12]**

b) Distinguish between centrifugal and axial compressors. **[5]**

Q7) a) A furnance wall of composite nature is made up of with 120 mm of fire clay with k = 0.25 (1+0.0009 t) W/m °C and 600 mm of red brick (k = 0.8 W/m °C). The inside surface temperature is 1250 °C and outside air temperature is 40 °C. Determine the temperature at layer interface and the heat loss for 1 m^2 of furnance wall. **[9]**

b) Derive general three dimensional heat conduction equation in Cartesian coordinates. Also, deduce the equation in simplified forms. **[9]**

OR

Q8) a) Explain in details types and selection of thermal insulation. **[7]**

b) A furnace wall is made up of three layers of thicknesses 250 mm, 100mm and 150 mm with thermal conductivity of 1.65, k and 9.2 W/m °C, respectively. The inside is exposed to gases at 1250 °C with a convective coefficient of 25 W/m^2 °C and the inside surface is at 1100 °C, the outside surface is exposed to air at 25 °C with convection coefficient of 12 W/m^2 °C. Determine **[11]**

i) The unknown thermal conductivity k

ii) The overall heat transfer coefficient

iii) All surface temperatures



Total No. of Questions : 8]

SEAT No. : ____

P989

[Total No. of Pages : 2

[5869]-349
S.E. (Automation and Robotics)
PRINCIPLES OF ROBOTICS (Theory)
(2019 Pattern) (Semester - IV)

Time : 2½ Hours] ***[Max. Marks : 70***

Instructions to the candidates:

1) ***Answer four questions from the following.***
2) ***Draw neat labeled diagram wherever necessary.***
3) ***Figures to the right side indicate full marks.***
4) ***Use of non programmable electronic calculator is permitted.***
5) ***Assume suitable/standard data if necessary.***

Q1) a) Classify the grippers in a brief. **[4]**

b) Discuss mechanical grippers with neat sketch. **[6]**

c) Explain in brief active and passive compliance. **[8]**

OR

Q2) a) Explain characteristics of Grippers. **[4]**

b) Explain the design consideration for selection of gripper. **[6]**

c) Derive an expression for velocity of End effectors of a cartesian configuration. **[8]**

Q3) a) What is meant by LVDT. State its applications. **[4]**

b) Explain in a brief Piezo electric sensor with the figure. **[6]**

c) Explain in a brief force and torque sensors. **[7]**

OR

Q4) a) Explain sensor selection criteria for robotics applications. **[4]**

b) Explain in a brief proximaty Sensor. With the figure. **[6]**

c) Explain with block diagram machine vision system for robots. **[7]**

P.T.O.

Q5) a) What are homogeneous transformations of coordinates? Write the homogeneous transformation matrix for translation in 3D space. **[4]**

b) Discuss the various inputs to an inverse kinematics of 2DOF robots.**[6]**

c) A point P (8,4 and 1) is attached to a robo frame and subjected to following transformation. Find the coordinate of point relative to reference frame. **[8]**

i) Rotation of 90º about Z-axis.

ii) Followed by rotation of 90º about Y-axis.

iii) Followed by translation of [4,-3,7]

OR

Q6) a) Explain properties of Jacobian Matrix of a manipulator. **[4]**

b) Explain the steps involved in DH Notation for 2 DOF Robot. **[6]**

c) Explain the geometric based inverse kinematic analysis of two joints robot. **[8]**

Q7) a) Explain and compare different methods of Robot Programming. **[4]**

b) Write short note on offline Robot Programming. **[6]**

c) Write a program to write letters by Robot using VAL Language. **[7]**

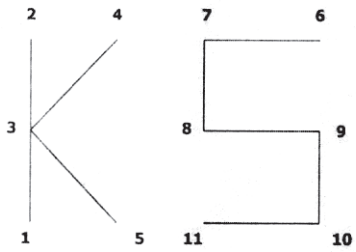

OR

Q8) a) Sketch and explain with suitable example "A Robot program as a path in Space". **[4]**

b) Write short note on online programming. **[6]**

c) Enumerate the non-manufacturing areas where robots are expected to be used. Discuss robot application for welding and machine loading. **[7]**

● ● ●

Total No. of Questions : 8]

SEAT No. :

P690

[Total No. of Pages : 2

[5869]-351
S.E. (Mechatronics)
ENGINEERING MATERIAL
(2019 Pattern) (Semester - III)

Time : 2½ Hours] *[Max. Marks : 70*

Instructions to the candidates:

1) ***Answer Q1 or Q2, Q3 or Q4, Q5 or Q6, Q7 or Q8.***
2) ***Neat diagrams must be drawn wherever necessary.***
3) ***Figures to the right side indicate full marks.***
4) ***Assume suitable data if necessary.***

UNIT - I

Q1) a) What are solid Solutions? What are their types? **[6]**

b) Explain Humerothery rule for substitutional solid solutions. **[6]**

c) What do you understand by "Nucleation & crystal growth"? **[6]**

OR

Q2) a) What is solidification of pure metals, solidification of alloys? **[6]**

b) What are types of phase diagram? **[6]**

c) Write a note on "Iron-carbon equilibrium diagrams in detail with emphasis in the invariant reactions" **[6]**

UNIT - II

Q3) a) What are Time temperature transformation diagrams & continuous cooling transformation diagrams? **[6]**

b) What is Retained austenite? Discuss their effects in short. **[5]**

c) Explain necessity of Heat treatment. List out and explain steps in annealing process in short. **[6]**

OR

Q4) a) Write a short note on Hardening and Tempering. **[6]**

b) What is sub-zero treatment? Is hardenability good or bad? Justify. **[5]**

c) Classify surface hardening. Explain any one with figure. **[6]**

P.T.O.

UNIT - III

Q5) a) Write down the classification of Carbon steel. List out the properties of carbon steel and their corresponding industrial application. **[6]**

b) What are details of composition in Stainless steel and tool steel? What are their application. **[6]**

c) What are various types of Cast Iron? Explain industrial application of White CI, Gray CI, SG CI. **[6]**

OR

Q6) a) Classify alloy steel. Explain the effect of alloying elements in alloy steel. **[6]**

b) What is Designation of carbon steel and alloy steels as per IS, AISI, SAE Standards? **[6]**

c) Write a short note on Microstructure and property relationship of various ferrous Materials. **[6]**

UNIT - IV

Q7) a) Write down the classification of Non-ferrous Metals. Explain their composition with respect to application. **[6]**

b) What are Aluminum and its alloys? List down applications of any three alloys in details. **[5]**

c) What are materials used additive manufacturing? Write down their desired properties from additive manufacturing point of view. **[6]**

OR

Q8) a) What are copper and its alloys? List down applications of any three alloys in details. **[6]**

b) Write a short note on Nickel and its alloys. Where they could be incorporated in practical life? **[5]**

c) What is age hardening? Classify the Bearing alloys. **[6]**



Total No. of Questions : 8] **SEAT No. :**

P691 **[Total No. of Pages : 4**

[5869]-352

S.E. (Mechatronics Engineering)

HEAT AND MASS TRANSFER

(2019 Pattern) (Semester - II) (217542)

Time : 2½ Hours] ***[Max. Marks : 70***

Instructions to the candidates:

1) ***Answer Q.No.1. or Q.No.2, Q.No.3 or Q.No.4, Q.No.5 or Q.No.6, Q.No.7 or Q.No.8.***
2) ***Neat diagrams must be drawn wherever necessary.***
3) ***Use of logarithmic tables, slide rule and electronic pocket calculator is allowed.***
4) ***Figures to the right side indicate full marks.***
5) ***Assume suitable data, if necessary.***

Q1) a) Explain various stages of combustion in S. I. Engine with neat sketch. **[8]**

b) What is heat engine? Differentiate between internal combustion engine and external combustion engine. **[6]**

c) Classify Internal combustion engines. **[2]**

OR

Q2) a) Define the following engine nomenclature. **[6]**

i) Cylinder Bore

ii) Stroke

iii) Displacement volume

iv) Clearance volume

v) Compression ratio

vi) Cubic capacity

P.T.O.

b) Explain working of two stroke internal combustion engine with neat sketch. **[4]**

c) List down the assumptions used in analysis of air standard cycles. **[6]**

Q3) a) Define Biot and Fourier numbers with their physical significance? **[6]**

b) Explain the selection criteria of insulating materials. **[4]**

c) A 50 cm × 50 cm copper slab 6.25 mm thick has a uniform temperature of 300°C. Its temperature is suddenly lowered to 36°C. Calculate the time required for the plate to reach the temperature of 108°C.

Take ρ = 9000 kg/m^3 , c = 0.38 kJ/kg°C ; k= 370 W/m°C and h= 90 W/m^2 °C. **[8]**

OR

Q4) a) Define and give significance for the following. **[6]**

i) Thermal contact resistance

ii) Thermal conductivity

iii) Thermal diffusivity

b) Explain the concept of critical radius of insulation over electrical cables with suitable diagram. **[4]**

c) A reactor's wall, 320mm thick, is made up of an inner layer of fire brick (k = 0.84 W/m°C) covered with a layer of insulation (k = 0.16 W/m°C). The reactor operates at a temperature of 1325°C and ambient temperature is 25°C. Determine. **[8]**

i) the thickness of fire brick and insulation which gives minimum heat loss.

ii) the heat loss presuming that the insulating material has a maximum temperature of 1200°C.

Q5) a) What are differences between natural convection and forced convection? Give examples. **[4]**

b) Write the statements and mathematical expressions of the following laws in radiation heat transfer : **[6]**

i) Planck's Law

ii) Lambert's cosine law

ii) Stefan's Boltzmann's law

c) Calculate the heat transfer from a 60 W incandescent bulb at 115°C to ambient air at 25°C. Assume the bulb as sphere of 50 mm diameter. **[8]**

Use $Nu = 0.60 (Gr. Pr)^{1/4}$.

Take properties of air at 70°C as

$k = 0.02964$ W/m K, $\vartheta = 20.02 \times 10^{-6}$ m/s, $Pr = 0.694$

OR

Q6) a) Define Kirchhoff' s law and prove that with neat sketch when the black body is thermally equilibrium with surrounding its emissivity is equal to absorptivity. **[6]**

b) Explain in detail velocity boundary layer and thermal boundary layer with neat sketch. **[6]**

c) Assuming the sun to be a black body emitting radiation with maximum intensity at $\lambda = 0.49$ μm, calculate the following : **[6]**

i) The surface temperature of the sun

ii) The heat flux at surface of the sun

Q7) a) Explain the phenomenon of nucleate boiling. List the factors that affect nucleate boiling. **[6]**

b) Write a short note on heat pipe. **[4]**

c) The flow rates of hot and cold water streams running through a parallel flow heat exchanger are 0.2 kg/s and 0.5 kg/s respectively. The inlet temperatures on hot and cold sides are 75°C and 20°C respectively. The exit temperature of hot water is 45°C. If the individual heat transfer coefficients on both sides are 650 W/m^2 °C, Calculate the area of the heat exchanger. **[8]**

OR

Q8) a) Derive an expression for LMTD for parallel flow heat exchanger with neat sketch. **[7]**

b) In a counter flow double pipe heat exchanger, water is heated from 25°C to 65°C by an oil with a specific heat of 1.45 kJ/kg K and mass flow rate of 0.9 kg/s. The oil is cooled from 230°C to 160°C. If overall heat transfer coefficient is 420 W/m^2°C, calculate the following: **[8]**

i) The rate of heat transfer

ii) The mass flow rate of water

iii) The surface area of heat exchanger

c) Classify heat exchangers in brief **[3]**



Total No. of Questions : 8] **SEAT No. :**

P692 **[Total No. of Pages : 2**

[5869] - 353
S.E. (Mechatronics Engineering)
DIGITAL ELECTRONICS
(2019 Pattern) (Semester - III)

Time : 2½ Hours] ***[Max. Marks : 70***

Instructions to the candidates:

1) ***Attempt Q1 or Q2, Q3 or Q4, Q5 or Q6, Q7 or Q8.***
2) ***Figures to the right indicate full marks.***
3) ***Neat diagram must be drawn wherever necessary.***
5) ***Assume suitable data, if necessary.***

Q1) a) Draw and explain ring counter using D flip-flop. Also draw the necessary timing diagram. **[9]**

b) Design binary sequence generator to generate binary sequence '1010' using MS JK flip-flops. **[9]**

OR

Q2) a) Draw and explain 3-bit asynchronous UP-counter. Also draw the necessary timing diagram. **[9]**

b) Explain the internal diagram of IC 7490. Design MOD 68 Counter using 7490. **[9]**

Q3) a) Draw an ASM chart and state diagram for 2 bit up binary counter having one enable line E such

That E = 1 (counting enabled) E = 0 (counting is disabled) **[8]**

b) Draw and explain block diagram of PLD device. **[9]**

OR

Q4) a) What is ASM chart? State and explain the basic components of ASM Chart. Mention application of ASM chart. **[8]**

b) Implement the following functions using PLA:

$F1(A, B, C) = \Sigma m (1, 2, 4, 6)$

$F2(A, B, C) = \Sigma m(0, 1, 6, 7)$ **[9]**

P.T.O.

Q5) a) Explain the following characteristics of TTL logic families:

i) Power dissipation.

ii) Noise margin.

iii) Propagation delay. **[9]**

b) What is tri-state? What is the use of tri-state buffers? Explain with suitable circuit diagram. **[9]**

OR

Q6) a) Compare TTL and CMOS logic family. **[9]**

b) Draw 3 input standard TTL NAND gate circuit and explain its operation. **[9]**

Q7) a) Draw & explain the block diagram of ideal microprocessor based system. **[8]**

b) Explain basic arithmetic operations using IC 74181. **[9]**

OR

Q8) a) Draw and explain block diagram of IC 74181. **[8]**

b) Explain 4-bit multiplier circuit using ALU & shift registers. **[9]**

Total No. of Questions : 8]

SEAT No. :

P693

[Total No. of Pages : 4

[5869]-354

S.E. (Mechatronics Engineering)
ANALYSIS OF MECHANICAL STRUCTURE
(2019 Pattern) (Semester - III) (217544)

Time : 2½ Hours] *[Max. Marks : 70*

Instructions to the candidates:

1) ***Answer Q.No.1 or Q.No.2, Q.No.3 or Q.No.4, Q.No.5 or Q.No.6, Q.No.7 or Q.No.8.***
2) ***Neat diagrams must be drawn wherever necessary.***
3) ***Figures to the right side indicate full marks.***
4) ***Assume suitable data if necessary.***
5) ***Use of logarithmic tables, slide rule and electronic pocket calculator is allowed.***

Q1) a) A rolled steel joist of I-section has the dimensions as shown in figure 1. The beam of I section carries a U.D.L. of 40 kN/m run on span of 10 m. Calculate the maximum stress produced due to bending. Also draw the bending stress distribution across the depth of section. **[8]**

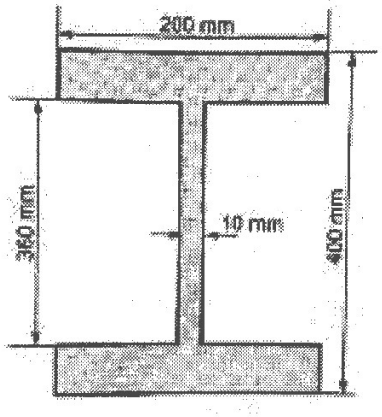

b) A simply supported beam of 8 m length is loaded as shown in figure 2. Find deflection under each load. Take E = 210 Gpa and I = 180×10^6 mm^4. **[9]**

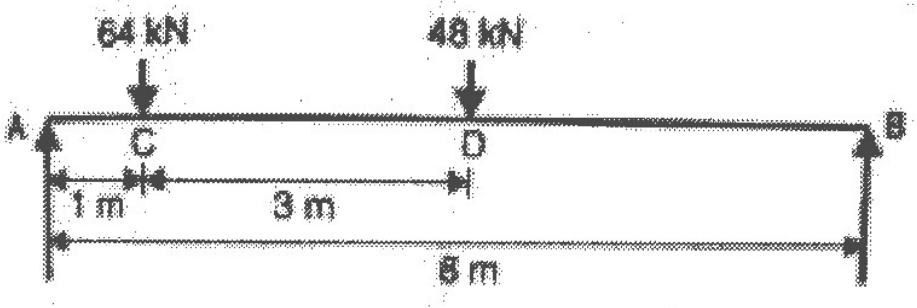

OR

P.T.O.

Q2) a) Draw shear stress variation diagram for the beam section shown in figure 3. Take shear force SF = 100 kN. **[9]**

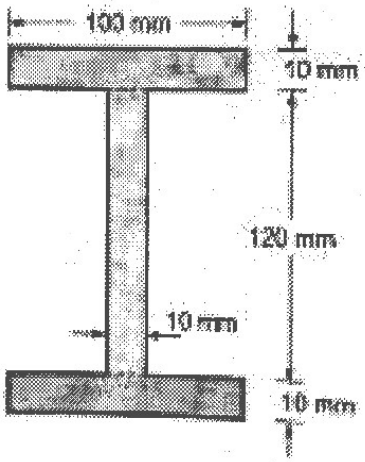

b) For simply supported beam show in figure 4. Find : **[8]**

i) Slope at each end.

ii) Deflection at C and D, Take E = 200 kN/mm^2 and I = 6.5 × 10^4 mm^4.

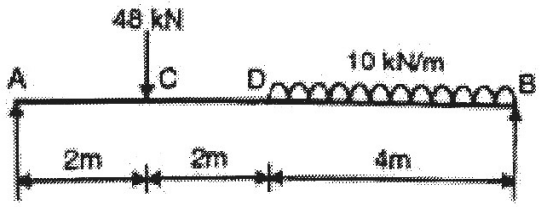

Q3) a) A hollow circular shaft has an external diameter of 120 mm and internal diameter of 100 mm. The maximum permissible shear stress is 100 Mpa and twist is not to exceed 3.6º in length of 3 m. Maximum torque is 25% more than average torque. The shaft is rotating at 2 RPS. If the shear modulus is 80 Gpa. Find safe power that can be transmitted. **[9]**

b) A steel bar of rectangular cross section 60 mm × 80 mm and pinned at each end is subjected to axial compression. If the proportional limit of the material is 210 Mpa and E = 210 Gpa, Determine the minimum length for Euler's equation may be used to determine the buckling load. **[8]**

OR

Q4) a) Figure 5 shows a horizontal shaft ABCD fixed to a rigid base at D and subjected to torques. A hole 60 mm in diameter has been drilled into the part CD of the shaft. Determine the angle of twist at the end. A Take G = 7.7 × 10^4 Mpa. **[8]**

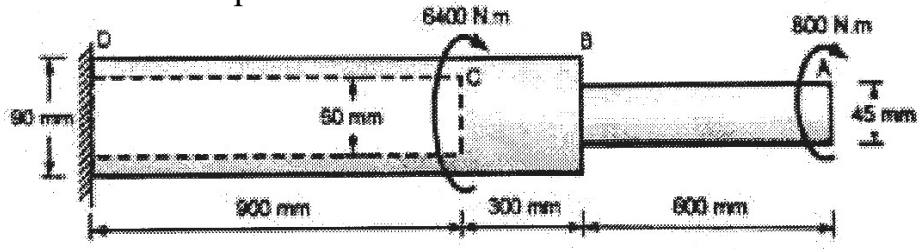

b) A cylindrical tube having internal diameter 70 mm and external diameter 80 mm is used as column. The section is subjected to an axial load of 100 kN. Determine whether the tube is safe for the given application. Use Rankine formula with Rankine's constant a = (1/7500), E = 200 Gpa, Yield stress = 150 Mpa and effective length of column = 4.5 m. **[9]**

Q5) a) A plane element is subjected to stresses as shown in figure 6. Determine the principal stresses, maximum shear stress and position of principal plane. **[6]**

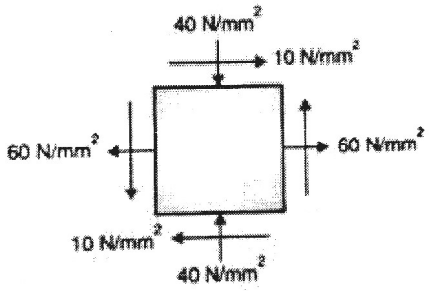

b) The stresses on two mutually perpendicular planes through a point in a body are 30 Mpa and 15 Mpa both tensile along with shear stress of 25 Mpa. Find : **[6]**

i) Magnitude and direction of principal stresses.
ii) Maximum shear stress and their planes.
iii) Normal and shear stresses on the planes of maximum shearing stress. Use Mohr's circle method.

c) A bolt is subjected to an axial pull of 40 kN and a transverse shear force of 15 kN. Determine the diameter of the bolt required based on : **[6]**

i) Maximum shear stress theory.
ii) Maximum principal stress theory.

Take elastic limit in simple tension is equal to 230 Mpa and Poisson's ratio = 0.3. Assume FOS = 2.

OR

Q6) a) The stress induced to a critical point in a machine component made of steel are as follows σ_x = 100 N/mm^2, σ_y = 40 N/mm^2, τ_{xy} = 80 N/mm^2 calculate the factory of safety by **[6]**

i) Maximum shear stress theory.
ii) Maximum normal stress theory.
iii) Maximum distorsion energy theory. Assume σ_{yt} = 380 N/mm^2.

b) A point in a strained material is subjected to stress as shown in figure 7. Using Mohr's circle method, Determine the magnitude and direction of major and minor principal stress. **[6]**

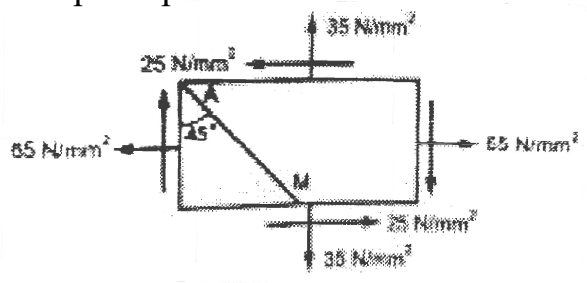

c) A point in strained material is subjected to stresses as shown in figure 8. Find principal stresses, maximum shear stress and positions of principal plane. **[6]**

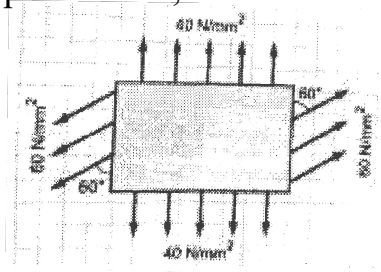

Q7) a) A column support load of 400 kN is shown in figure 9. Find the stresses at the corner of the column at its base. **[6]**

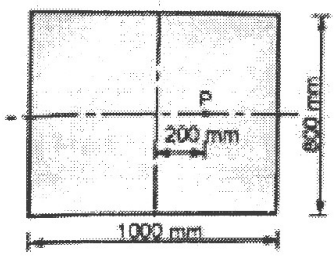

b) A rectangular column of 240 mm × 150 mm is subjected to a vertical load of 10 kN placed at an eccentricity of 60 mm in a plane bisecting 150 mm side. Determine the maximum and minimum stress intensities in the section. **[6]**

c) A hollow circular steel column having external diameter 200 mm and internal diameter 150 mm carries a vertical load of 80 kN acting with an eccentricity of 50 mm. Calculate maximum and minimum stress intensities in the section. **[6]**

OR

Q8) a) A masonary pier 3 m × 4 m supports a vertical load of 600 kN at a point as shown in figure 10. Find the stresses at the corners of the pier. **[6]**

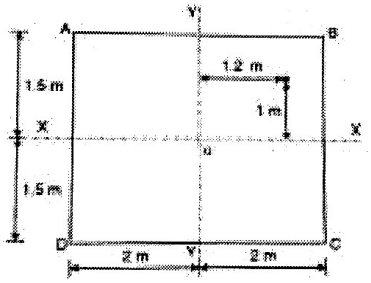

b) A short column 200 mm × 100 mm is subjected to an eccentric load of 60 kN at an eccentricity of 40 mm in the plane bisecting the 100 mm side. Find the maximum and minimum intensities of the stresses at the base. **[6]**

c) A rectangular column of width 140 mm and thickness 120 mm carries a point load of 180 kN at an eccentricity of 10 mm. Determine the maximum and minimum stress at the base of column. **[6]**



Total No. of Questions :8]

SEAT No. :

P694

[Total No. of Pages : 4

[5869]-356
S.E. (Mechatronics Engineering)
KINEMATICS OF MACHINERY
(2019 Pattern) (Semester - VI)

Time : 2½ Hours] ***[Max. Marks : 70***

Instructions to the candidates:

1) ***Answer Q.No.1 or Q.No.2, Q.No.3 or Q.No.4, Q.No.5 or Q.No.6, QNo.7 or Q.No.8***
2) ***Neat diagram must be drawn wherever necessary.***
3) ***Use of drawing instruments, electronic pocket calculators are allowed.***
4) ***Figure to the right indicates full marks.***
5) ***Assume suitable data if necessary.***

Q1) a) In the mechanism, as shown in Fig, the crank OA rotates at 20 r.p.m. anticlokwise and gives motion to the sliding blocks B and D. The distance between the center of the crank and the path of the slider is 1050 mm. The dimensions of the various links are OA = 300 mm; AB = 1200 mm; BC = 450 mm and CD = 450 mm. **[10]**

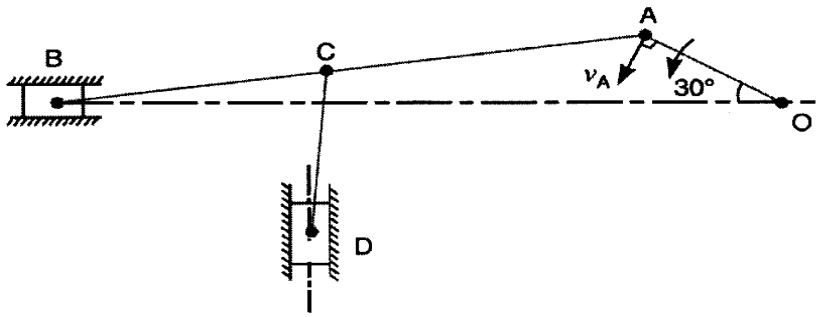

b) Explain the term Concept of Velocity Image Principle. **[4]**

c) Explain Various types of Instantaceous center method. **[4]**

OR

Q2) a) PQRS is a four bar chain with link PS fixed as shown in fig. The lengths of the links are PQ=62.5 mm; QR = 175 mm. RS = 112.5 mm; and PS = 200 mm. The crank PQ rotates at 10 rad/s clockwise. Draw the velocity and acceleration diagram when angle QPS = 60º and Q and R lie on the same side of PS.

Find the angular velocity and angular acceleration of links QR and RS.

P.T.O.

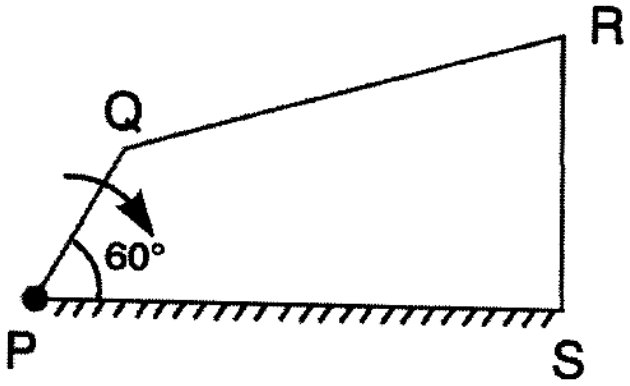

[10]

b) The mechanism of a wrapping machine, as shown in Fig, has the following dimensions : O_1A = 100 mm; AC = 700 mm; BC = 200 mm; O_3C = 200 mm; O_2E = 400 mm; O_2 D = 200 mm and BD = 150 mm. The crank O_1A rotates at a uniform speed of 100 rad/s. Find the velocity of the point E of the bell crank lever by instantaneous center method. **[8]**

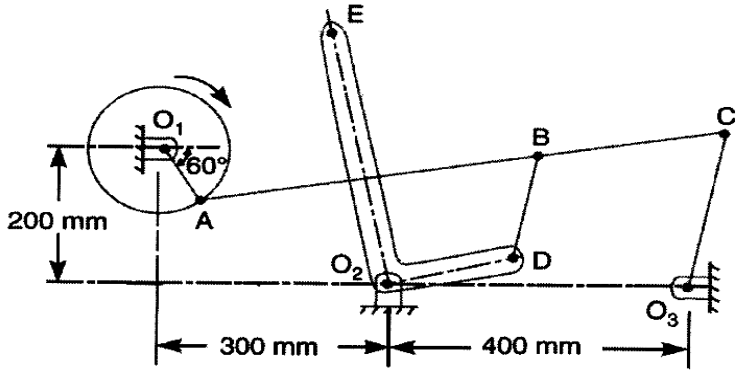

Q3) a) Synthesize a four bar mechanism by the method of Inversion. **[10]**

Assume the follwing data:

i) Length between fixed points 100 mm and input link length is 35 mm.

ii) Initial position of input link 60º 2-Position of input link from the initial position 30º and 60º.

iii) 2 - Position of the output link from the initial position 20 degree and 40 degree.

b) Derive the Frudenstine's equation of four bar Mechanism. **[7]**

OR

Q4) a) Determine the chebyshev spacing for function $Y = X^{1.5}$ for the range $0 \leq \times \leq 3$ where three precision points are required. For these position points, determine **[10]**

θ_2, θ_3 and $\phi 2, \phi 3$

If $\Delta\theta = 40^o$ and $\Delta\phi = 90^o$

b) Explain the term Function Generation. **[3]**

c) Discuss Precision position related to synthesis of Mechanisms. **[4]**

Q5) a) List the types of gear train. Explain anyone with neat. **[4]**

b) Compare spur gear and helical gear. **[3]**

c) A pair of gears having 50 & 25 teeth respectively rotates in mesh externally, the speed of the smaller being 1000 rpm. Determine the velocity of sliding between the gear teeth at the point of start of engagement and end of engagement if the smaller gear is the driver. Assume that the gear teeth are 20° involute tooth form, addendum is 5 mm and the module is 5 mm. Also find contact ratio. **[10]**

OR

Q6) a) State the different methods to avoid the interference. Explain any one with neat sketch. **[4]**

b) Define the terms. **[3]**

i) pitch angle

ii) Helix angle

iii) Lead angle

c) An epicyclic gear consists of three gears A, B and C as shown in Fig. **[10]**

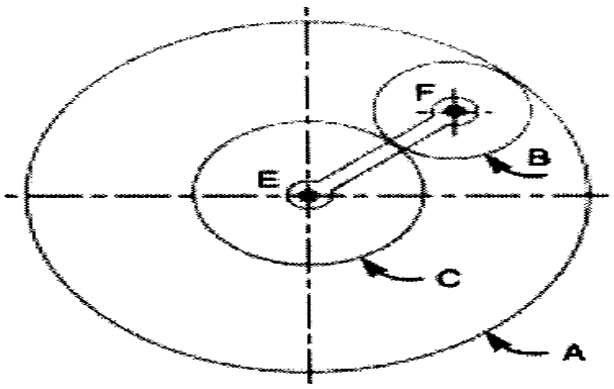

The gear A has 90 internal teeth and gear C has 40 external teeth. The gear B meshes with both A and C and is carried on an arm EF which rotates about the centre of A of 25 r.p.m. in anticlockwise sense. if the gear A is fixed, determine the speed of gears B and C.

Q7) a) A cam is to give the following motion to a knife edged follower. **[13]**

i) Outstroke with uniform velocity during 60º of cam rotation.

ii) Dwell for next 30º of cam rotation.

iii) Return stroke with S.H.M. during next 60º of cam rotation.

iv) Dwell for the rest of cam rotation.

The storke of the follower is 40 mm and the minimum radius of the cam is 50 mm. Draw the profile of the cam when the axis of the follower is offset by 20 mm from the axis of the cam shaft.

b) Explain the different types of Industrial automations. **[5]**

OR

Q8) a) A cam with a minimum radius of 25 mm to give the following motion to a roller follower. **[14]**

i) to raise the follower through 50 mm with uniform acceleration and uniform retardation during 120º cam rotation.

ii) dwell for next 60º cam rotation.

iii) to lower the follower through 50 mm with S.H.M. during the next 60º cam rotation.

iv) dwell for rest of the cam rotation.

The diameter of roller follower is 20 mm. Draw the cam profile when the axis of the follower passes through the centre of the cam.

b) Classify the methods of transporting workpieces on flow lines. Explain any one in detail. **[4]**

✠ ✠ ✠

Total No. of Questions : 8]

SEAT No. :

P695

[Total No. of Pages : 3

[5869]-357

S.E. (Mechatronics Engineering)

FLUID MECHANICS AND MACHINERY

(2019 Pattern) (Semester - IV)

Time : 2½ Hours] *[Max. Marks : 70*

Instructions to the candidates:

1) ***Answer Q.No. 1 or Q.No. 2, Q.No. 3 or Q.No. 4, Q.No. 5 or Q.No. 6, Q.No. 7 or Q.No. 8.***
2) ***Neat diagrams must be drawn wherever necessary.***
3) ***Use of logarithmic tables, slide rule, and electronic pocket calculator is allowed.***
4) ***Figure to the right indicate full marks.***
5) ***Assume suitable data, if necessary.***

Q1) a) Derive an expression of Velocity & Shear Stress distribution for steady laminar flow passing through circular pipe. **[8]**

b) A fluid of viscosity 0.7 Ns/m^2 and specific gravity 1.3 is flowing through a circular pipe of diameter 100 mm. The maximum shear stress at the pipe wall is given as 196.3 N/m^2, Find **[8]**

i) The pressure gradient,

ii) The average velocity, and

iii) Reynolds number of the flow

OR

Q2) a) Explain Displacement thickness, Momentum thickness and Energy thickness with mathematical expression. **[6]**

b) A crude oil of kinematic viscosity 0.4 stoke is flowing through a pipe of diameter 300 mm at the rate of 300 litres per sec. Find the head lost due to friction for a length of 50 m of the pipe. **[6]**

c) Write a short note on Boundary layer theory. **[4]**

P.T.O.

Q3) a) Write a short note on : **[4]**

i) Buckingham's Pi theorem

ii) Dimensional Homogeneity

b) Determine the dimensions of the quantities given below. **[6]**

i) Discharge

ii) Kinematic Viscosity

iii) Force

c) The efficiency η of a fan depends on density ρ, dynamics viscosity μ, of the fluid, angular velocity ω, diameter D of the rotor and discharge Q. Express η in terms of dimensionless parameters. **[8]**

OR

Q4) a) Explain the following dimensionless numbers: **[4]**

i) Reynold's Number

ii) Froude's Number

b) Write a short note on following. **[6]**

i) Reynolds's Model Law

ii) Froude's Model Law

iii) Euler's Model Law

c) The resisting force R of a supersonic plane during flight can be considered as dependent upon the length of the aircraft 1, velocity V , air viscosity μ, air density ρ and bulk modulus of air K. Express the functional relationship between these variables and the resisting force. **[8]**

Q5) a) Explain working with constructional details of Pelton Wheel (turbine). **[8]**

b) Write difference between Impulse turbine and reaction turbine. **[5]**

c) Draw Velocity Triangles of Francis Turbine with terminology. **[5]**

OR

Q6) a) A Kaplan turbine develops 24647.7 kW power at an average head of 39 meters. Assuming speed ratio of 2, flow ratio of 0.6. diameter of boss is equal to 0.35 times the diameter of runner and overall efficiency of 90 %. Calculate diameter, speed and specific speed of the turbine. **[8]**

b) Explain working with constructional details of Kaplan turbine. **[5]**

c) Explain detailed classification of Hydraulic turbines. **[5]**

Q7) a) A centrifugal pump is to discharge 0.118 m^3/s at a speed of 1450 r.p.m against a head of 25 m. The diameter and width of the impeller at outlet are 250 mm and 50 mm respectively. If the manometric efficiency is 75%. Determine the vane angle at the outlet. **[8]**

b) Define the following terms : **[5]**

i) Suction head

ii) Delivery head

iii) Static head

iv) Virtual head

v) Manometric head

c) Explain in detail classification of hydraulic pump. **[5]**

OR

Q8) a) The internal and external diameter of the impeller of a centrifugal pump are 200 mm and 400 mm respectively. The pump is running at 1200 r.p.m. The vane angles of the impeller at inlet and outlet are 20 and 30 respectively. The water enters the impeller radially and velocity of flow is constant. Determine the flow velocity and work done by the impeller per unit weight of water. **[6]**

b) Explain working principle of centrifugal pump with figure. **[6]**

c) Explain the following efficiency for centrifugal pump. **[6]**

i) Manometric Efficiency

ii) Mechanical Efficiency

iii) Overall Efficiency

⌘⌘⌘

Total No. of Questions : 8]

SEAT No. : ____

P990

[Total No. of Pages : 2

[5869]-358
S.E. (Mechatronics Engineering)
ELECTRICAL MACHINES AND DRIVES
(2015 Pattern) (Semester - IV) (217549)

Time : 2½ Hours] ***[Max. Marks : 70***

Instructions to the candidates:

1) ***Answer Q.1 or Q.2, Q.3 or Q.4, Q.5 or Q.6, Q.7 or Q.8.***
2) ***Neat diagrams must be drawn wherever necessary.***
3) ***Use of logarithmic tables, slide rule and electronic pocket calculator is allowed.***
4) ***Figures to the right indicate full marks.***
5) ***Assume suitable data, if necessary.***

Q1) a) Write a short note on permanent magnet synchronous machine. **[9]**

b) For 2200V, 440 kVA, single phase alternator the armature resistance is 0.5Ω, field current of 40A, gives an open circuit voltage of 1160V and short circuit current of 200A. Calculate synchronous impedence and reactance. Also find % regulation at 0.8 pf lag. **[9]**

OR

Q2) a) With a suitable diagram explain armature reaction in synchronous machine. **[9]**

b) State the similarities and difference between 3 phase Induction motor and 3 phase synchronous motor. **[9]**

Q3) a) Explain in detail block diagram of electrical drives. **[9]**

b) Explain different selection factors of electrical drive system. **[8]**

OR

Q4) a) Explain four quadrant operation of motor driving a hoist load. **[9]**

b) Write a short note on load torque components. **[8]**

P.T.O.

Q5) a) Explain in detail speed control of DC motor using Ward-Leonard drive. **[9]**

b) Explain single phase fully controlled rectifier fed DC motor drive. **[9]**

OR

Q6) a) Write a short note on closed loop speed control of DC motor. **[9]**

b) Write a short note on step down chopper controlled DC drives. **[9]**

Q7) a) Write a short note on closed loop speed control on Induction motor drives. **[9]**

b) Explain variable speed drives of operation of synchronous motor. **[8]**

OR

Q8) a) Explain regenerative braking method of Induction motor. **[9]**

b) Compare VSI and CSI for induction motor drive. **[8]**

❄ ❄ ❄

Total No. of Questions : 8] **SEAT No. :**

P696 **[Total No. of Pages : 2**

[5869]-359
S.E. (Mechatronics)
SENSORS AND ACTUATORS
(2019 Pattern) (Semester - IV) (217550)

Time : 2½ Hours] ***[Max. Marks : 70***

Instructions to the candidates:

1) ***Answer Q1 or Q2, Q3 or Q4, Q5 or Q6, Q7 or Q8.***
2) ***Neat diagrams must be drawn wherever necessary.***
3) ***Figures to the right side indicate full marks.***
4) ***Assume suitable data if necessary.***

Q1) a) What is significance of Pressure measurement? What is microphone? State their applications? **[6]**

b) What are elastic pressure transducers? What are their applications? **[6]**

c) What is basic principle of working piezoelectric pressure sensors? What are their applications? **[6]**

OR

Q2) a) How higher range pressure measurements are done? Explain with pressure measurement ranges? **[6]**

b) What is basic principle of working ultrasonic flow meter? Compare them with magnetic flow meters? **[6]**

c) Explain working principle of Hall Effect Sensors? What are its applications? **[6]**

Q3) a) What is modeling of DC motor? How heat dissipation in DC motor can be managed? **[6]**

b) Write a short note on Velocity Profile optimization in DC Motor? **[5]**

c) What are various types of Stepper motors? What are the characteristics features of Stepper Motor. **[6]**

OR

Q4) a) What are Linear Actuators? Explain working of solenoid? **[6]**

b) What are characteristics of Induction motors? **[5]**

c) Explain Electrical model of energized coil. What is step angle? **[6]**

P.T.O.

Q5) a) What are the Components of pneumatic and hydraulic systems? Draw neat sketch. **[6]**

b) What are Pumps and Compressor used in Hydraulic and Pneumatic Systems? **[6]**

c) What are filters hydraulic Systems? Explain in detail. **[6]**

OR

Q6) a) How pressure regulation is done pneumatic circuits? **[6]**

b) What are Electroactive Polymers? What are their specific applications? **[6]**

c) What are materials used for artificial muscles? What are the shapes memory alloys? **[6]**

Q7) a) Explain following, (i) Actuator bandwidth (ii) Frequency Response. **[6]**

b) What are power and energy consideration during actuator selection? **[5]**

c) Write a short note on tradeoffs between force/displacement. **[6]**

OR

Q8) a) What are industrial considerations during actuator selection? **[5]**

b) Write a short note on tradeoffs between torque/speed. **[6]**

c) Write a short note on control system and electronics. **[6]**



Total No. of Questions : 8]

SEAT No. :

P697

[Total No. of Pages : 2

[5869]-360

S.E. (Mechatronics)

APPLICATIONS OF INTEGRATED CIRCUITS

(2019 Pattern) (Semester - IV) (217551)

Time : 2½ Hours] *[Max. Marks : 70*

Instructions to the candidates:

1) ***Answer Q.1 or Q.2, Q.3 or Q.4, Q.5 or Q.6, Q.7 or Q.8.***
2) ***Figures to the right indicate full marks.***
3) ***Neat diagrams must be drawn wherever necessary.***
4) ***Assume suitable data; if necessary.***

Q1) a) Explain the working of Non-Inverting Comparator. **[6]**

b) Draw and explain sample and hold circuit using op-amp. **[6]**

c) Draw circuit diagram and input-output waveform of precision half wave & full wave rectifier. **[6]**

OR

Q2) a) Draw and Explain Zero cross detector and Window Detector with necessary waveform. **[6]**

b) Explain in detail working of square wave generator with neat circuit diagram. Draw waveforms of output voltage and capacitor voltage. **[6]**

c) For the Inverting Schmitt trigger shown in fig. below Calculate UTP, LTP and hysteresis width. Draw input and output waveforms. Also comment on Hysteresis loop. **[6]**

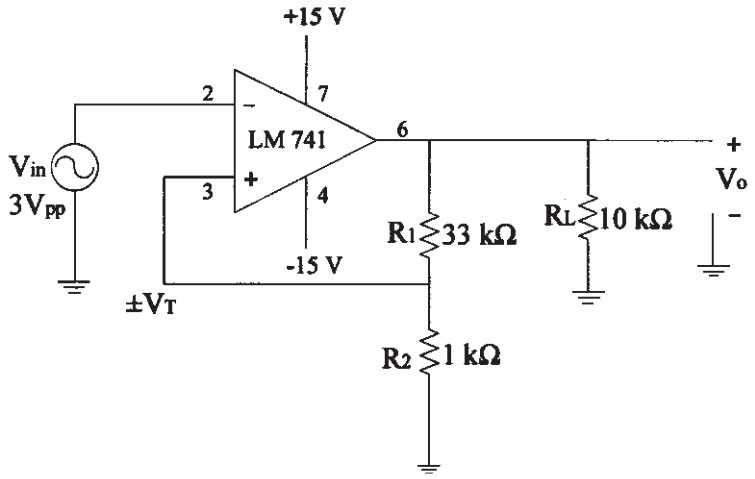

P.T.O.

Q3) a) Draw and explain successive approximation A/D converter. **[6]**

b) Draw circuit diagram and explain D/A converter with binary weighted resistors and write output voltage equation, V_o. **[6]**

c) Write a short note on Performance parameter of ADC. **[5]**

OR

Q4) a) With the help of neat Diagram, Explain Flash type ADC. **[6]**

b) Write a short note on Performance parameter of DAC. **[5]**

c) Draw circuit diagram for R-2R ladder DAC and write its output equation. **[6]**

Q5) a) Explain the working of functional block diagram of IC 555 Timer. **[6]**

b) Write a short note on Basic operation of Power Amplifier LM 380. **[6]**

c) Explain voltage Divider using multiplier 534. **[6]**

OR

Q6) a) Explain Voltage controlled Oscillator 566 and write its applications. **[6]**

b) With the help of neat block diagram, explain the operation of PLL565. **[6]**

c) Draw circuit diagram of waveform generator XR 2206. **[6]**

Q7) a) Explain with neat block diagram IC Voltage Regulator. **[6]**

b) Draw the practical voltage regulator using IC LM 317 and justify the use of each component in the circuit. **[6]**

c) What are the Switching regulator topologies? Explain any one. **[5]**

OR

Q8) a) Draw and explain the functional diagram of 723 regulator. **[5]**

b) Explain typical connections of 78XX and 79XX regulators with circuit diagram. **[6]**

c) Explain the following. **[6]**

i) Current limiting Feature

ii) Current fold back protection

⌘⌘⌘

Total No. of Questions : 8]

SEAT No. :

P698

[Total No. of Pages : 5

[5869]-361
S.E. (Artificial Intelligence and Data Science)
DISCRETE MATHEMATICS
(2019 Pattern) (Semester - III) (210241)

Time : 2½ Hours] ***[Max. Marks : 70***

Instructions to the candidates:

1) ***Solve Q.1 or Q.2, Q.3 or Q.4, Q.5 or Q.6, Q.7 or Q.8.***
2) ***Figures to the right indicate full marks.***
3) ***Neat diagrams must be drawn whenever necessary.***
4) ***Assume suitable data wherever necessary.***

Q1) a) The company has 10 members on its board of directors. In how many ways can they elect a president, a vice president, a secretary and a treasure. **[6]**

b) Find eighth term in the expansion of$(x+y)^{13}$. **[6]**

c) A box contains 6 white and 5 black balls. Find number of ways 4 balls can be drawn from the box if **[6]**

i) Two must be white

ii) All of them must have same colour

OR

Q2) a) In how many ways can word the 'HOLIDAY' be arranged such that the letter I will always come to left of letter L. **[6]**

b) In how many ways can one distribute 10 apples among 4 children. **[6]**

c) Use Binomial theorem to expand $(x^4 + 2)^3$. **[6]**

Q3) a) Is it possible to draw a simple graph with 4 vertices and 7 edges. Justify? **[7]**

P.T.O.

b) Define following terms with example **[5]**

i) Complete graph

ii) Regular graph

iii) Bipartite graph

iv) Complete bipartite graph

v) Paths and circuits

c) The graphs G and H with vertex sets V(G) and V(H), are drawn below. Determine whether or not G and H drawn below are isomorphic. If they are isomorphic, give a function g: V(G)->V(H) that defines the isomorphism. If they are not explain why they are not. **[5]**

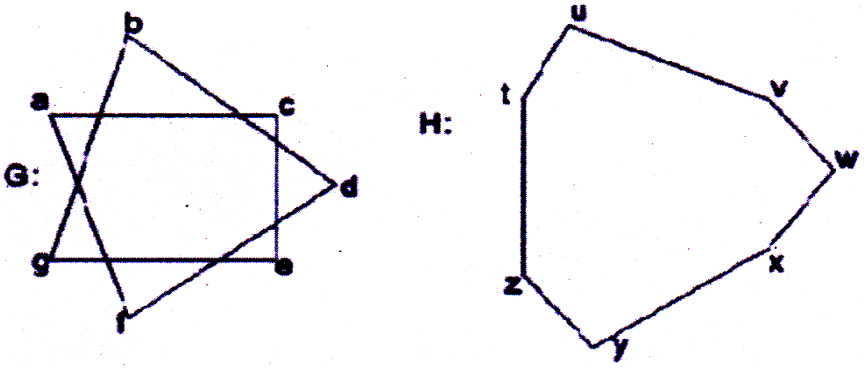

OR

Q4) a) Determine which if the graph below represents Eulerian circuit, Eulerian path, Hamiltonian circuit and Hamiltonian path. Justify your answer **[7]**

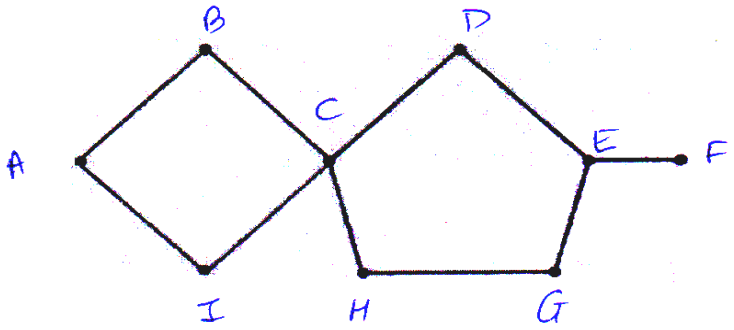

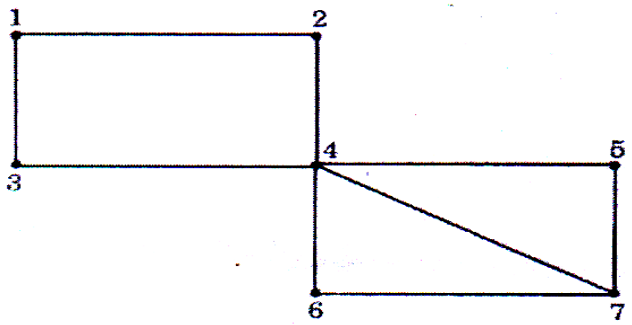

b) A connected planar graph has nine vertices with degree 2, 2, 2, 3, 3, 3, 4, 4, 5 Find. **[5]**

i) number of edges

ii) number of faces

iii) construct two such graphs

c) Explain the following statement with example. **[5]**

"Every graph with chromatic number 2 is bipartite graph"

Q5) a) Construct Huffman tree. **[6]**

A	5
B	6
C	6
D	11
E	20

b) Explain **[6]**

i) Cutset

ii) Tree properties

iii) Prefix code

c) Give the stepwise construction of minimum spanning tree using Prims algorithm for the following graph. Obtain the total cost of minimum spanning tree. **[6]**

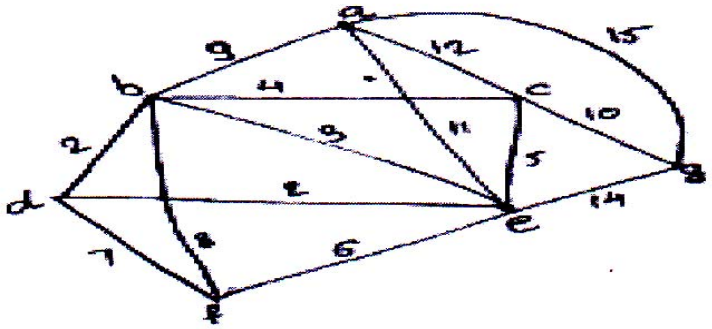

OR

Q6) a) Using the labelling procedure to find maximum flow in the transport network in the following figure. Determine the corresponding minimum cut. **[6]**

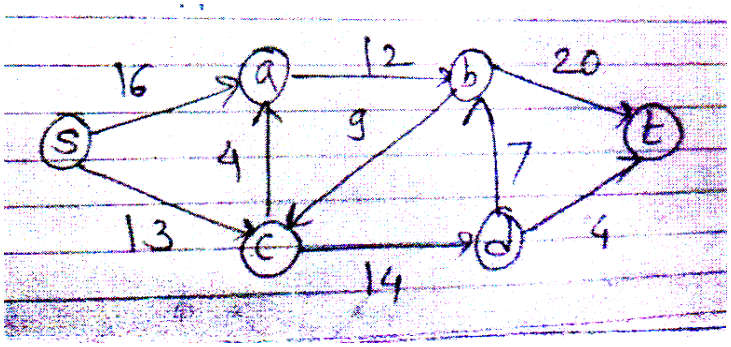

b) Define with example. **[6]**

i) Level and height of a tree.

ii) Binary search tree.

iii) Spanning tree

c) Construct binary search tree by inserting integers in order 50, 15, 62, 5, 20, 58, 91, 3, 8, 37, 60, 24. **[6]**

Find

i) No. of internal nodes

ii) Leaf nodes

Q7) a) Let R ={0,60,120,180,240,300} and * binary operation so that for a and b in R, a * b is overall angular rotation corresponding to successive rotations by a and by b. Show that (R,*) is a group. **[6]**

b) Following is the incomplete operation table of 4-element group. Complete the last two rows. **[6]**

*	e	a	b	c
e	e	a	b	c
a	a	b	c	e
b				
c				

c) Explain Algebraic system and properties of binary operations. **[5]**

OR

Q8) a) i) Explain the following terms with examples. **[6]**

ii) Ring with unity

iii) Integral domain

iv) Field

b) Consider the set Q of rational numbers and let a*b be the operation defined by a * b = a + b – ab. **[6]**

i) Find 3*4,

ii) 2*(–5),

iii) 7*(1/2)

Is (Q,*) a semigroup? Is it commutative?

c) Show that $\left(Zn,^{\oplus}\right)$ is Abelian group. **[5]**

❄ ❄ ❄

Total No. of Questions : 8]

SEAT No. :

P699

[Total No. of Pages : 2

[5869]-364

S.E. (Artificial Intelligence and Data Science)
COMPUTER GRAPHICS
(2019 Pattern) (Semester - III) (210244)

Time : 2½ Hours] *[Max. Marks : 70*

Instructions to the candidates:

1) ***Answer Q.No.1 or Q.No.2, Q.No.3 or Q.No.4, Q.No.5 or Q.No.6, Q.No.7 or Q.No.8.***
2) ***Neat diagrams must be drawn wherever necessary.***
3) ***Figures to the right side indicate full marks.***
4) ***Assume suitable data, if necessary.***

Q1) a) Differentiate between Orthographic Projection and Isometric Projection. **[5]**

b) Derive 3D transformation matrix for rotation about a principal axis. **[5]**

c) A triangle is defined by $\begin{bmatrix} 2 & 4 & 4 \\ 2 & 2 & 4 \end{bmatrix}$. Find transformed coordinates after the following transformation. **[8]**

i) 90º rotation about the origin.

ii) Reflection about line X = Y.

OR

Q2) a) What are the types of projection and write in brief about each type of projections. **[5]**

b) What is transformation and write transformation matrix for : **[5]**

i) 3D translation using homogenous coordinate system.

ii) 3D rotation about X-axis.

c) Consider the square A(1, 0), B(0, 0), C(0, 1), D(1, 1). Rotate the square ABCD by 45º anticlockwise about point A(1, 0). **[8]**

Q3) a) What is Backface? Explain Backface Detection and removal. **[6]**

b) Explain and compare point source and diffuse illumination. **[5]**

P.T.O.

c) Explain the following terms with examples : **[6]**

i) Color gamut.

ii) Specular Reflection.

iii) Diffuse reflection.

OR

Q4) a) Write short note on Painters Algorithm. **[6]**

b) Explain Halftone shading. **[5]**

c) Compare RGB and HSV color model. **[6]**

Q5) a) Explain the Bezier curve. Enlist its properties. **[4]**

b) Draw and explain Hilbert's curve with an example. **[7]**

c) What are fractals? Explain Triadic Koch in detail. **[7]**

OR

Q6) a) Write a short note on interpolation and approximation. **[4]**

b) Explain Blending function for B-Spline curve. **[7]**

c) With suitable example write short note on the fractal lines. **[7]**

Q7) a) Explain deletion of segment with suitable example. **[7]**

b) Write any three important features of NVIDIA gaming platform. **[3]**

c) Draw block diagram of NVIDIA workstation and explain in brief. **[7]**

OR

Q8) a) Write a short note on motion specification methods based on : **[7]**

i) Geometric and kinematics information.

ii) Animation languages.

b) What is Morphing and write the applications of Morphing. **[3]**

c) Explain renaming of a segment with suitable example. **[7]**



Total No. of Questions : 8]

SEAT No. :

P700

[Total No. of Pages : 2

[5869]-365

S.E. (Artificial Intelligence and Data Science)

OPERATING SYSTEMS

(2019 Pattern) (Semester - III) (217521)

Time : 2½ Hours] *[Max. Marks : 70*

Instructions to the candidates:

1) ***Solve questions Q.1 or Q.2, Q.3 or Q.4, Q.5 or Q.6, Q.7or Q.8.***
2) ***Neat diagrams must be drawn wherever necessary.***
3) ***Figures to the right indicate full marks.***
4) ***Assume suitable data if necessary.***

Q1) a) What is a deadlock? State and explain the conditions for deadlock to occur. **[6]**

b) What is Readers-Writers problem? How Reader and Writer processes synchronize? **[6]**

c) What is semaphore? Explain the concept of binary semaphore. **[5]**

OR

Q2) a) Explain Bankers Algorithm with an example. **[6]**

b) Write the structure of Producer-Consumer problem in bounded buffer using semaphore. Discuss how critical section requirements are fulfilled? **[6]**

c) What do you mean by pipe? Explain named/FIFO pipe. **[5]**

Q3) a) Explain segmentation with suitable diagram. **[6]**

b) What are the steps in handling page fault? Explain with suitable diagram. **[6]**

c) Write a short note on compaction. **[6]**

OR

Q4) a) Explain paging with suitable diagram. **[6]**

b) Write a short note on swapping. **[6]**

c) What is internal fragmentation and external fragmentation? Give example of each. **[6]**

P.T.O.

Q5) a) Which are different file organization techniques? Describe any one in brief. **[6]**

b) Write a short note on I/O functions. **[6]**

c) Describe any one disk scheduling policy with an example. **[5]**

OR

Q6) a) What are the file access methods? Explain them in detail. **[6]**

b) What is tree structured directory? Explain with suitable diagram. **[6]**

c) Write a note on free space management. **[5]**

Q7) a) How process and threads are implemented in Linux? Explain. **[6]**

b) How process scheduling is performed in Linux? **[6]**

c) What is make utility? Explain it with example. Consider your own make file. **[6]**

OR

Q8) a) Explain process management system calls in Linux. **[6]**

b) Write a short note on kernel structure. **[6]**

c) What are the requirements for Linux system administrator? Define the design principles of LINUX systems. **[6]**

⌘⌘⌘

Total No. of Questions : 8]

SEAT No. :

P2251

[Total No. of Pages : 3

[5869]-367

S.E. (Artificial Intelligence & Data Science)

SOFTWARE ENGINEERING

(2019 Pattern) (Semester - IV)

Time : 2½ Hours] *[Max. Marks : 70*

Instructions to the candidates:

1) ***Solve Q.1 or Q.2, Q.3 or Q.4, Q.5 or Q.6, Q.7 or Q.8.***
2) ***Neat diagrams must be drawn wherever necessary.***
3) ***Assume suitable data, if necessary.***

Q1) a) Explain the various activities during software project planning. **[6]**

b) Explain the concept of FP. Why FPs are becoming acceptable in industry? **[6]**

c) Is it possible to estimate software size before coding? Justify your answer with suitable examples. **[6]**

OR

Q2) a) Illustrate various open-source tools, for scheduling of software activities. List the attributes that are associates with scheduling task for implementing schedule process. **[6]**

b) An application has 10 low external inputs, 12 high external outputs, 20 low internal logical files, 15 heigh external interface files, 12 average external inquiries and a value of complexity adjustment factor 1.l0.What are the unadjusted and adjusted function point counts? **[6]**

c) Explain Earned value analysis in project scheduling with suitable assumptions. **[6]**

P.T.O.

Q3) a) What are the software design quality attributes and quality guidelines? **[5]**

b) Explain the user interface design principles. **[5]**

c) List the different architectural styles. Explain any two in detail. **[7]**

OR

Q4) a) List all the design concepts. Abstraction & refinement are complementary concepts. Justify. **[5]**

b) Explain the user interface design principles and interface evaluation cycle. **[5]**

c) Enlist and explain Component level design steps in detail. **[7]**

Q5) a) What is risk identification? What are different categories of risks? **[6]**

b) What is risk projection? How risk projection is carried out using risk table? **[6]**

c) Prepare RMMM plan for late delivery of software product to the customer. **[6]**

OR

Q6) a) Explain Risk Projection and Risk Refinement in detail. **[6]**

b) What are the elements that exist when an effective SCM system is implemented? Discuss each briefly. **[6]**

c) What is Risk mitigation, monitoring and management (RMMM)? **[6]**

Q7) a) Explain phases in Verification and Validation model with suitable diagram. **[7]**

b) Explain the following: **[10]**

i) Integration testing and system testing

ii) Compare manual testing and Automation testing

OR

Q8) a) Discuss Strategies in WebApp testing. Illustrate the use of Automation tool in WebApp. **[7]**

b) Discuss the following with suitable diagram : **[10]**

i) Compare Conventional Software Testing and Object Oriented Software testing.

ii) Compare Black box and white box testing.

❄ ❄ ❄

Total No. of Questions : 8]

SEAT No. : ____

P701

[Total No. of Pages : 4

[5869] - 368

S.E. (Artificial Intelligence and Data Science)

STATISTICS

(2019 Pattern) (Semester - IV) (217528) (Theory)

Time : 2½ Hours] ***[Max. Marks : 70***

Instructions to the candidates :

1) ***Answer Q.1 or Q.2, Q.3 or Q.4, Q.5 or Q.6 and Q.7 or Q.8.***
2) ***Neat diagrams must be drawn wherever necessary.***
3) ***Assume suitable data, if necessary.***
4) ***Figures to the right indicate full marks.***

Q1) a) Calculate the mean and standard deviation for the following table giving the age distribution of 542 members. **[9]**

Age (in years)	20 - 30	30 - 40	40 - 50	50 - 60	60 - 70	70 - 80	80 - 90
No. of members	3	61	132	153	140	51	2

b) In a partially destroyed laboratory, record of an analysis of correlation data, the following results only are legible : Variance of X = 9. Regression equations : 8X–10Y+66=0, 40X–18Y=214. What are : **[9]**

i) the mean values X and Y,

ii) the correlation coefficient between X and Y, and

iii) the standard deviation of Y?

OR

Q2) a) For 10 randomly selected observations the following data were recorded

Observation no :	1	2	3	4	5	6	7	8	9	10
Observation hrs. (X)	1	1	2	2	3	3	4	5	6	7
Additional units (Y)	2	7	7	10	8	12	10	14	11	14

Determine the coefficient of regression and regression equation using the non-linear form $Y = a + b_1 X + b_2 X^2$. **[9]**

P.T.O.

b) Variables X and Y have the joint p.d.f. given by : **[9]**

$$F(x,y)=\frac{1}{3}(x+y);0\le x\le 1,0\le y\le 2$$

Find

i) r(X, Y),

ii) The two lines of regression, and

iii) The two regression curves for the means

Q3) a) Assume that on an average number out of 15 called between 2pm to 3pm on week days is busy. What is the probability that 6 randomly selected telephone numbers called **[6]**

i) Not more than 3 busy

ii) At least 3 busy

b) If the probability that an individual suffers a bad reaction from certain injection is 0.001. Determine the probability out of 2000 people, by using Poisson's distribution **[5]**

i) Exactly 3

ii) More than 1 will suffer a bad reaction

c) In a Sample of 1000 cases the means of a certain test is 14 and standard deviation is 2.5. Assuming the distribution to be normal find **[6]**

i) How many students scored between 12 & 15.

ii) How many scored below 8.

[Given : A(z = 0.8) = 0.2881, A(z = 0.4) = 0.1554), A(z = 2.4) = 0.4918]

OR

Q4) a) A Random variable X with following probability distribution **[5]**

X	1	2	3	4	5
P (X)	k	$2k$	$2k$	k	$7k^2$

Find

i) k ii) P ($x \ge 2$)

iii) P ($x < 3$) iv) P ($2 \le x \le 3$)

v) P ($x \ge 3$)

b) In a continuous distribution density function **[6]**

$f(x) = kx(2-x)$, $0 < x < 2$.

Find the value of

i) k ii) Mean

iii) Variance

c) For a normal distribution when mean = 1, standard deviation = 4, find the probabilities of the following intervals : **[6]**

i) $3.43 \leq x \leq 6.19$ ii) $-1.43 \leq x \leq 6.19$

[Given : A(z = 0.81) = 0.2910, A(z = 1.73) = 0.4582]

Q5) a) The following table gives the number of accidents that took place in an industry during various days of the week. Test if accidents are uniformly distributed over the week. **[6]**

Days	Mon	Tue	Web	Thur	Fri	Sat
No. of accidents	14	18	12	11	15	14

Given chi-square$_{0.05,5}$ = 11.09.

b) A normal population has mean 6.8 and standard deviation 1.5. A sample of 400 members gave a mean of 6.75. Is the difference significant? **[6]**

$Z\alpha$ = 1.96 at 5% level of significance.

c) Suppose that sweets are sold in packages of fixed weight of contents. The procedure of the packages is interested in testing the average weight of content in packages in 1 kg. Sum of squares of deviations from mean of 12 samples is 0.011967. Using above data should we conclude the average. Given $\bar{X}$ = 0.9883, $t_{0.05,11}$ = 2.201. **[6]**

OR

Q6) a) A set of five similar coins is tossed 210 times and the result is given in the following table.

No. of heads	0	1	2	3	4	5
Frequency	2	5	20	60	100	31

Use chi-square test to test the hypothesis that data follows a binomial distribution (chi-square = 11.07 at 5% level of significance) **[6]**

b) From the given data below, Intelligence tests of two groups of boys and girls gave the following results. Examine the difference in significance. Given $Z\lambda$ = 1.96 at 5% level of significance. **[6]**

	Mean	Standard deviation	Size
Girls	70	10	70
Boys	75	11	110

c) In two independent samples of size 8 and 10, the sum of squares of deviations of sample values from the respective sample means were 84.4 and 102.6. Test whether the difference of variances of the population is significant or not. Given $F_{0.05}$ = 3.29 at d.f. (7, 9). **[6]**

Q7) a) If $x \geq 1$ is the critical region for testing $\Theta_0 : \theta = 2$ against the alternative $\theta = 1$ on the basis of the single observation from the population. $f(x, \theta) = \theta e^{-\theta x}$, $0 \leq x < \infty$, obtain the values of type I, type II error also find power of function. **[8]**

b) State & Prove Neyman-Pearson lemma for testing a simple hypothesis against a simple alternative hypothesis. **[9]**

OR

Q8) a) Write short note on : **[8]**

i) Population and sample

ii) Type I and Type II error

iii) Critical region

iv) Power of test

b) Let $X_1, X_2 \ldots X_n$ be random sample of size n from a normal distribution $N(\mu, \sigma^2)$ where μ and σ^2 both are unknown. Show that LRT used to test $H_0 : \mu = \mu_0$, vs $H_1 : \mu \neq \mu_0$, $0 < \sigma^2 < \infty$ is used t-test. **[9]**

OR

Explain in detail the test for the mean of normal population.

▽▽▽▽

Total No. of Questions : 8]

SEAT No. :

P2305

[Total No. of Pages : 2

[5869]-369

S.E. (Artificial Intelligence and Data Science) (Theory)

INTERNET OF THINGS

(2019 Pattern) (Semester - IV) (217529)

Time : 2½ Hours] *[Max. Marks : 70*

Instructions to the candidates :

1) ***Attempt Questions Q.1 or Q.2, Q.3 or Q.4, Q.5 or Q.6, Q.7 or Q.8.***
2) ***Draw neat and Clean Diagram.***
3) ***Assume suitable data, if necessary.***

Q1) a) Illustrate the various IoT communication APIs? **[8]**

b) With the help of following sectors explain how IoT technology is impacting on the end-to-end value chain in the logistics sector : **[10]**

i) Route generation & scheduling

ii) Fleet tracking

iii) Shipment monitoring

iv) Remote vehicle diagnostics

OR

Q2) a) Demonstrate the IoT component with a neat diagram. **[9]**

b) What is Piggybacking? What is the necessity of security and privacy of IoT? **[9]**

Q3) a) Draw and Explain WSN architecture? **[9]**

b) Explain any four IoT network protocols? **[8]**

OR

Q4) a) Explain Machine to Machine Architecture? **[9]**

b) Explain any four applications of RFID? **[8]**

P.T.O.

Q5) a) Explain IoT Information model specification. **[9]**

b) Explain Various IoT sim card Technologies **[9]**

OR

Q6) a) What are the criterias for selection of controllers in Embedded Products? **[9]**

b) What are different security parameters considered while designing any IoT system? **[9]**

Q7) a) Discuss various IoT applications in the Agriculture domain. **[6]**

b) What is the E-Healthcare system? How IoT is important in E-Health Monitoring application. **[6]**

c) Discuss various IoT applications in Automotive applications. **[5]**

OR

Q8) a) Write a short note on IoT vertical Applications. **[6]**

b) Explain Voice Application for IoT Device. **[6]**

c) Explain Vehicle to Vehicle communication. **[5]**

Total No. of Questions : 8]

SEAT No. :

P703

[Total No. of Pages : 2

[5869]-370
S.E. (Artificial Intelligence and Data Science)
MANAGEMENT INFORMATION SYSTEM
(2019 Pattern) (Semester - IV) (217530)

Time : 2½ Hours] *[Max. Marks : 70*

Instructions to the candidates :

1) ***Answer Q1 or Q2, Q3 or Q4, Q5 or Q6, Q7 or Q8.***
2) ***Neat diagrams must be drawn whenever necessary.***
3) ***Figures to the right side indicate full marks.***
4) ***Assume suitable data, if necessary.***

Q1) a) What are the current trends in computer hardware platforms? **[9]**

b) What is IT infrastructure and what are the stages and drivers of IT infrastructure evolution? **[8]**

OR

Q2) a) What are the problems of managing data resources in a traditional file environment? **[9]**

b) How do the Internet and Internet technology work and how do they support communication and e-business? **[8]**

Q3) a) Explain Enterprise resources planning (ERP) systems with the goals? **[9]**

b) Describe Unique Features of E-Commerce Technology with suitable examples? **[8]**

OR

Q4) a) Explain the importance of project management and its objectives? **[9]**

b) What is a strategic information system? What is the difference between a firm level strategy and business level strategy? **[8]**

Q5) a) Explain Concept of Supply Chain management (SCM) with suitable examples? **[9]**

b) What is Electronic Commerce System. Explain it types with suitable examples? **[9]**

OR

P.T.O.

Q6) a) What is Decision Support system? How it is used in Business? **[9]**

b) How Data Mining used in Marketing. **[9]**

Q7) a) Explain Artificial Neural Networks with suitable examples? **[9]**

b) How does Virtual Reality Work? **[9]**

OR

Q8) a) What is Expert System. Explain with Example? **[9]**

b) What are the different tools used for generation of Reports? **[9]**



Total No. of Questions : 8]

SEAT No. :

P704

[Total No. of Pages : 4

[5869]-371

S.E. (Artificial Intelligence and Machine Learning)

DISCRETE MATHEMATICS

(2019 Pattern) (Semester - III)

Time : 2½ Hours] *[Max. Marks : 70*

Instructions to the candidates:

1) ***Answer Q.1 OR Q.2, Q.3 OR Q.4, Q.5 OR Q.6, Q.7 OR Q.8.***
2) ***Neat diagrams must be drawn wherever necessary.***
3) ***Figures to the right indicates full marks.***
4) ***Assume suitable data, if necessary.***

Q1) a) Use nearest neighbour method to find the Hamiltonian circuit starting from 'a' in the following graph, find its weight. **[6]**

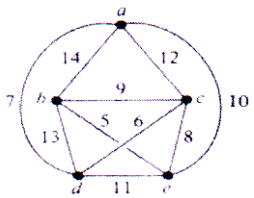

b) Construct an optimal tree for the weights 1,2,4,5,6,9,10,12. Find the weight of the optimal tree. **[6]**

c) Build a minimum spanning tree for the following graph using Prim's algorithm. Consider starting vertex as a. Explain the procedure with steps. **[6]**

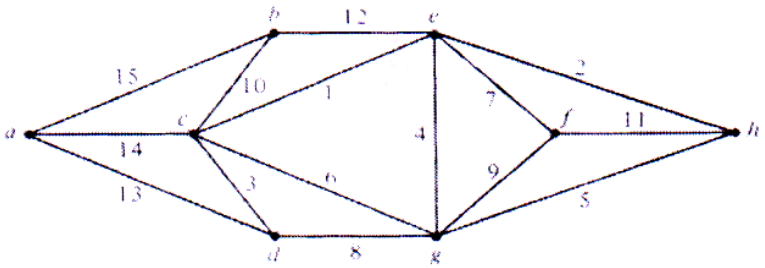

OR

Q2) a) Define Following with examples : **[6]**

i) Graph

ii) Self loop and Parallel edges

iii) Multiple Graphs

P.T.O.

b) Use Dijkstra's algorithm to find the shortest path between a and z. **[6]**

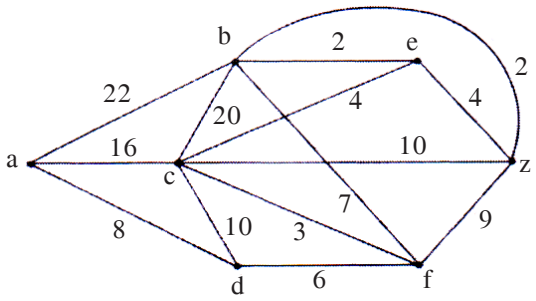

c) Using labelling procedure, find the max flow for the following transport network. **[6]**

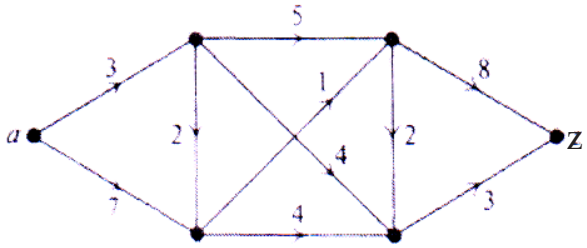

Q3) a) What is Lattice? Determine whether the posets represented by each of the Hasse diagrams in Figure are lattices. **[6]**

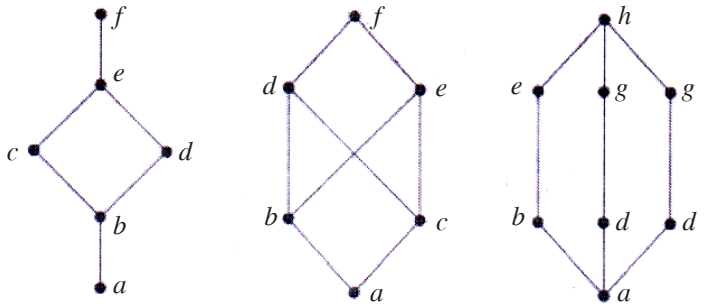

(a) (b) (c)

b) Let R= {(a, d), (b, a), (b, d), (c, b), (c, d), (d, c)}. Use Warshall's algorithm to find the transitive closure where A = {a, b, c, d}. **[6]**

c) Let A = {a, b, c, d} and B = {1, 2, 3}. Determine whether the Relation R from A to B is a function, Justify.

If it is function give the range. **[5]**

i) R = [(a, 1), (b, 2), (c, 1), (d, 2)]

ii) R = [(a, 1), (b, 2), (a, 2), (c, 1), (d, 2)]

OR

Q4) a) Use Warshall's algorithm to find transitive closure of the following relation on the set {1, 2, 3, 4}, R = {(1, 2), (1, 3), (1, 4,), (2, 1), (2, 3), (3, 4), (3, 2), (4, 2), (4, 3)}. **[6]**

b) Let A = {1, 2, 3} and f1 and f2 are functions from A to B given by : **[6]**

f1 = {(1, 2), (2, 3), (3, 1)}

f2 = {(1, 2), (2, 1), (3, 3)}

Compute f1 . f2 and f2 . f1.

c) Write generalized pigeonhole principle. Use any form of pigeonhole principle to solve the given problem. **[5]**

i) Assume that there are 3 men and 5 women in a party. Show that if these people are lined up in a row at least 2 women will be next to each other.

ii) Find the minimum number of students in a class to be sure that three of them are born in the same month.

Q5) a) List all the congruence class modulo 6. List at least 3 elements to left as well as right of the modulo class k (where k = 0 to n-1). **[6]**

b) Using Binary expansion method solve the following (Show step-wise answer) 9^63 mod 11. **[6]**

c) Find the Euler's Totient function of the following numbers : **[6]**

i) 13

ii) 81

iii) 120

OR

Q6) a) Using Euclidean Algorithm find GCD of 280 & 800. **[6]**

b) Using Fermat's Theorem and Fermat's Euler Theorem solve the following : **[6]**

i) 7^121 mod 11

ii) 11^100 mod 21

c) Find Multiplicative Inverse of 17 mod 36 using Extended Euclidean Algorithm. **[6]**

Q7) a) Let Q be the set of all rational numbers other than 1. Show that with operation * defined on the set Q by (a* b = a + b – ab) is an Abelian group. **[7]**

b) Let I be the set of all integers. For each of the following determine whether * is an commutative operation or not : **[7]**

i) a*b = min(a, b)

ii) a*b = max(a + 2, b)

iii) a*b = a - 2b

iv) a*b = max(2a-b, 2b-a)

v) a*b = GCD(a, b)

vi) a*b = multiply(a, b)

vii) a*b = a-b

c) What is an identity element in Group? Give an example. **[3]**

OR

Q8) a) Show that set G of all numbers of the form $a + b\sqrt{2}$, a, b $\in$ I forms a group under the operation addition i.e. $(a + b\sqrt{2}) + (c + d\sqrt{2}) = (a + c) + (b + d)\sqrt{2}$. **[9]**

b) Determine whether the set together with the binary operation is a semigroup, a monoid, group, or neither. **[8]**

S = {1, 2, 3, 6, 12}, where a*b is defined as GCD(a, b).

⌘⌘⌘

Total No. of Questions : 8]

SEAT No. : ____

P705

[Total No. of Pages : 2

[5869]-372

S.E. (Artificial Intelligence and Machine Learning)

DATA STRUCTURES & ALGORITHMS

(2019 Pattern) (Semester - III) (218542)

Time : 2½ Hours] ***[Max. Marks : 70***

Instructions to the candidates:

1) ***Answer Q.1 or Q.2, Q.3 or Q.4, Q.5 or Q.6, Q.7 or Q.8.***
2) ***Neat diagrams must be drawn wherever necessary.***
3) ***Figures to the right side indicate full marks.***
4) ***Assume suitable data, if necessary.***

Q1) a) Write sudo code for converting a given infix expression to prefix expression and apply the algorithm to convert (a+b)*c to postfix. **[9]**

b) Discuss any four applications of Queue data structure in regards to system software (like operating system etc.) **[9]**

OR

Q2) a) Define an ADT for character Stack data structure(use array) and use the same to check whether the given string is palindrome or not and mention it's time complexity. **[9]**

b) Define an ADT for priority queue using linked representation and list its applications. **[9]**

Q3) a) Create a Binary Search Tree and perform stepwise in-order, Preorder and Postorder traversal of the created tree, for given data (50, 60, 25, 40, 30, 70, 35, 10, 55, 65, 5). **[9]**

b) Write a c++ function or pseudo code for non-recursive Inorder, Preorder tree traversal. **[8]**

OR

P.T.O.

Q4) a) What is a threaded binary tree? Write the advantages of threaded binary tree. **[9]**

b) What is Binary Search Tree (BST)? Explain the following operations in BST : **[8]**

i) Searching a value is BST

ii) Inserting a new value in BST.

Q5) a) Define the following with respect to graphs with examples : **[8]**

i) Degree of nodes ii) Isolated nodes

iii) Path iv) Cycle

b) Obtain AVL tree for the following data: MAR, MAY, NOV, AUG, APR, JAN, DEC, JUN, FEB, JUL, OCT, SEP. Show the balance factor of each node and show relations for the entire process. **[10]**

OR

Q6) a) Write Prims Algorithm. Find Minimum Spanning tree using Prims Algorithm. For the following graph : **[9]**

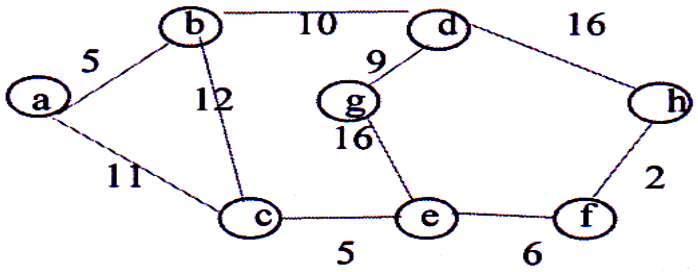

b) Find the OBST for the following data: N=4, (w1 ,w2, w3, w4) = (do, if, read, while) (p1, p2, p3, p4) = (1, 3, 1, 3), (q0, q1, q2, q3, q4) = (l, 2, 1, 1, 3). **[9]**

Q7) a) What is Hashing? List and explain different hashing functions. **[9]**

b) Explain Hashing-linear probing with and without replacement with examples. **[8]**

OR

Q8) a) What is File? Explain different file opening modes with example. **[9]**

b) Explain primitive operations on index sequential file in detail. **[8]**

❄ ❄ ❄

Total No. of Questions : 8] **SEAT No. :**

P706 **[Total No. of Pages : 2**

[5869] - 373

S.E. (Artificial Intelligence and Machine Learning)

COMPUTER NETWORKS

(2019 Pattern) (Semester - III)

Time : 2½ Hours] ***[Max. Marks : 70***

Instructions to the candidates:

1) ***Attempt Q.1, or Q.2, Q.3 or Q.4, Q.5 or Q.6, Q.7 or Q.8.***
2) ***Figures to the right side indicate full marks.***
3) ***Neat diagrams must be drawn wherever necessary.***
3) ***Use of Calculator is allowed.***
5) ***Assume suitable data, if necessary.***

Q1) a) Write short notes on: **[8]**

i) IEEE 802.4 (Token Bus)

ii) IEEE 802.5 (Token Ring).

b) What is the definition of a linear block code? Explain hamming code in brief. What is the Hamming distance? What is the minimum Hamming distance? **[9]**

OR

Q2) a) Explain CSMA/CA random access technique in detail with suitable diagram/ flowchart, Explain how collision is avoided in CSMA/CA. **[8]**

b) Explain Stop-and-Wait ARQ Protocol. Explain the reason for moving from the Stop-and-Wait ARQ Protocol to the Go Back-N ARQ Protocol. **[9]**

Q3) a) What is subnetting? A company is granted a site address 201.70.64.0/26. Design the subnets and answer following questions: **[8]**

i) How many subnets does the chosen subnet mask produce?

ii) How many valid hosts per subnet are available?

iii) What are the valid subnets?

iv) What's the broadcast address of each subnet?

v) What are the valid hosts in each subnet?

b) Explain working of ARP protocol with neat diagram. Compare and Contrast ARP Protocol & RARP Protocol. **[9]**

OR

P.T.O.

Q4) a) What is the address depletion (exhaustion) in IPv4? List different solutions to alleviate/relieve the problem of address depletion (exhaustion) in IPv4. Write the range of private IP addresses in IPv4. **[8]**

b) Explain following terms **[9]**

i) Distance Vector Routing

ii) Link State Routing

iii) Path Vector Routing

Q5) a) What is the difference between traffic shaping and congestion control at transport layer? Compare and contrast Leaky Bucket & Token Bucket algorithm. **[9]**

b) Enlist all socket primitives & explain any three. **[9]**

OR

Q6) a) Explain the three-way handshake algorithm for TCP connection establishment. Compare and contrast between TCP and UDP. **[9]**

b) What do you mean by flow control in transport layer? List the different methods of achieve it. Explain any one method in detail. **[9]**

Q7) a) What is DNS? What is the need of DNS? Explain any one query resolution technique in detail. **[9]**

b) What is MIME? What is the purpose of MIME? Explain MIME header in detail. **[9]**

OR

Q8) a) Define network management. List five functions of network management. Explain Role of MIB in detail. **[9]**

b) Describe the functions of the two FTP connections. List difference between FTP & TFTP in a tabular format. **[9]**

♦ ♦ ♦

Total No. of Questions : 8]

SEAT No. :

P707

[Total No. of Pages : 2

[5869]-374

S.E. (Artificial Intelligence and Machine Learning)
OBJECT ORIENTED PROGRAMMING
(2019 Pattern) (Semester - III) (218544)

Time : 2½ Hours] *[Max. Marks : 70*

Instructions to the candidates:

1) ***Answer Q.No.1 or Q.No.2, Q.No.3 or Q.No.4, Q.No.5 or Q.No.6, Q.No.7 or Q.No.8.***
2) ***Neat diagrams must be drawn wherever necessary.***
3) ***Figures to the right side indicate full marks.***
4) ***Assume suitable data, if necessary.***

Q1) a) What is constructor? Explain the concept of constructor overloading. **[9]**

b) What is destructor? What is the use of destructor in C++? Explain with an example. **[9]**

OR

Q2) a) Write a short note on : **[9]**

i) Constructor with default arguments.

ii) Symbolic constants.

b) Design a class 'Complex' with data members for real and imaginary part. Provide default and Parameterized constructors. Write a program in JAVA to perform addition of two complex numbers. **[9]**

Q3) a) How multiple inheritance can be implemented using interface? **[9]**

b) What is polymorphism? What are the types of polymorphism? How run time polymorphism achieved in Java? Explain with an example. **[8]**

OR

Q4) a) Define Inheritance. What are the types of Inheritance? How constructors get executed in multilevel inheritance? **[9]**

b) Explain the concept of abstract class and abstract method with an example. **[8]**

P.T.O.

Q5) a) What is exception and its types? Explain exception handling mechanism. **[9]**

b) What is generic programming? Write a short note on list interface. **[9]**

OR

Q6) a) Explain ArrayList class with an example. **[9]**

b) What is an exception? Demonstrate multiple catch clauses. **[9]**

Q7) a) Discuss about the File Input Stream and File Output Stream in java. **[9]**

b) Write a short note on 'Adaptor' design pattern. **[8]**

OR

Q8) a) Brief the concept of byte streams? Explain byte stream classes in detail. **[8]**

b) Discuss about Random Access files in Java. **[9]**



Total No. of Questions : 8]

SEAT No. :

P708

[Total No. of Pages : 2

[5869]-375

S.E. (Artificial Intelligence & Machine Learning)

SOFTWARE ENGINEERING

(2019 Pattern) (Semester - III) (218545)

Time : 2½ Hours] *[Max. Marks : 70*

Instructions to the candidates:

1) ***Answer questions Q.1 or Q.2, Q.3 or Q.4, Q.5 or Q.6, Q.7 or Q.8.***
2) ***Neat diagrams must be drawn wherever necessary.***
3) ***Figures to the right indicate full marks.***
4) ***Assume suitable data, if necessary.***

Q1) a) What is Software Architecture? Explain Data flow and Layered architectural style of the system. **[9]**

b) Explain design concepts : **[9]**

i) Pattern

ii) Information Hiding

iii) Modularity

OR

Q2) a) What is Design? Mention any 6 Design Guidelines. **[9]**

b) What is functional independence? Differentiate between coupling functional independence and Cohesion functional independence. **[9]**

Q3) a) What is Work Breakdown Structure? How is it related with scope management and explain 8/80 rule. **[9]**

b) What is the difference between PERT & CPM, state their application. What is the importance of critical path in a project? **[9]**

OR

P.T.O.

Q4) a) Explain Boehm's W^5HH Principle. **[5]**

b) What is Decomposition Technique? Explain Decomposition of Problem and Decomposition of Process. **[9]**

c) Explain typical problems with IT Cost Estimates. **[4]**

Q5) a) Explain McCall's Quality Factors. **[9]**

b) Justify the statement "quality is a complex and multifaceted concept". **[8]**

OR

Q6) a) Explain Unit Testing? Which testing scheme is suitable to remove conflict of interest? **[9]**

b) Discuss Garvin's eight Quality Dimensions. **[8]**

Q7) a) Explain any Four layers of SCM process in detail. **[8]**

b) Explain CASE taxonomy. **[9]**

OR

Q8) a) Explain in brief risk mitigation, monitoring and management. **[9]**

b) Write short note on : **[8]**

i) JIRA

ii) Kanban

⌘⌘⌘

Total No. of Questions : 8]

SEAT No. :

P991

[Total No. of Pages : 2

[5869] - 377

S.E. (Artificial Intelligence & Machine Learning)

OPERATING SYSTEMS

(2019 Pattern) (Semester - IV) (218552)

Time : 2½ Hours] ***[Max. Marks : 70***

Instructions to the candidates :

1) ***Answer Q.1 or Q.2, Q.3 or Q.4, Q.5 or Q.6, Q.7 or Q.8.***
2) ***Neat diagrams must be drawn wherever necessary.***
3) ***Figures to the right side indicate full marks.***
4) ***Assume suitable data if necessary.***

Q1) a) Explain following terms : **[9]**

i) Critical Section

ii) Semaphore

iii) Race condition

b) Consider the following snapshot of a system : **[8]**

Process	Allocation			Max			Available		
	R1	R2	R3	R1	R2	R3	R1	R2	R3
P1	0	1	0	7	5	3	3	3	2
P2	2	0	0	3	2	2			
P3	3	0	2	9	0	2			
P4	2	1	1	2	2	2			
P5	0	0	2	4	3	3			

Answer the following questions using the banker's algorithm :

i) What is the content of the matrix Need?

ii) Is the system in a safe state? What is safe sequence?

OR

Q2) a) What is semaphore? Write a semaphore solution for readers-writers problem with reader priority. **[9]**

b) Explain following synchronization problems with semaphore solution **[8]**

i) Producer and Consumer problem

ii) Dinning Philosopher problem

P.T.O.

Q3) a) For the following reference string
6, 5, 1, 2, 5, 3, 5, 4, 2, 3, 6, 3, 2, 1, 2
Count the number of page faults that occur with 3 frames using FIFO, optimal and LRU page replacement methods. **[12]**

b) Write a short note on buddy system. **[6]**

OR

Q4) a) Free memory holes of sizes 100K, 500K, 200K, 300K, 600K are available. The processes of size 212K, 417K, 112K, 426K are to be allocated. How processes are placed using first fit, best fit and worst fit algorithm (fixed partitioning). Calculate internal and external fragmentation. **[9]**

b) Define virtual memory. Explain the concept of demand paging with neat diagram. **[9]**

Q5) a) A disk drive has 200 tracks, numbered 0 -199. The drive is currently serving the request at track no. 53. The queue of pending requests in FIFO order is 98, 183, 37, 122, 14, 124, 65, 67. Starting from the current head position what is the total distance that disk arm moves to satisfy all the pending requests for the following disk scheduling algorithms. Assume that head is moving towards inner track for SCAN and C-LOOK. **[12]**

i) FCFS ii) SCAN
iii) C-LOOK iv) SSTF

b) Define following terms : **[6]**

i) Seek time ii) Rotational latency

OR

Q6) a) Explain disk free space management techniques. **[6]**

b) Explain in brief different I/O buffering techniques. **[6]**

c) List and explain any 2 record blocking methods. **[6]**

Q7) a) Explain working of "General Loading Scheme" with advantages and disadvantages. **[6]**

b) Draw and explain flowchart of Pass-2 of two pass assembler. **[6]**

c) Define following system software components with suitable diagram. **[5]**

i) Compiler ii) Loader
iii) Editor iv) Linker
v) Debugger

OR

Q8) a) Explain types of assembly language statements with syntax? **[6]**

b) Explain with example positional parameter and keyword parameter. **[6]**

c) Explain phase structure of compiler with neat diagram. **[5]**

▽▽▽▽

Total No. of Questions : 8]

SEAT No. :

P709

[Total No. of Pages : 2

[5869]-378
S.E. (AI & ML)
FUNDAMENTALS OF ARTIFICIAL INTELLIGENCE AND MACHINE LEARNING
(2019 Pattern) (Semester - IV) (218553)

Time : 2½ Hours] *[Max. Marks : 70*

Instructions to the candidates :

1) ***Answer Q1 or Q2, Q3 or Q4, Q5 or Q6, Q7 or Q8.***
2) ***Neat diagrams must be drawn wherever necessary.***
3) ***Figures to the right side indicate full marks.***
4) ***Assume suitable data if necessary.***

Q1) a) Explain Resolution in brief with an example. **[7]**

b) Explain Reasoning and also state it's type in details. **[10]**

OR

Q2) a) How will you represent facts in propositional logic with an example? **[10]**

b) Difference between predicate and propositional logic. **[7]**

Q3) a) Elaborate various cross validation techniques with advantages and limitations. **[9]**

b) Explain the Machine Learning pipeline in detail with suitable diagram. **[6]**

c) Differentiate between positive class and negative class. **[2]**

OR

Q4) a) Explain supervised and unsupervised and reinforcement learning with example. **[8]**

b) Explain the data preprocessing steps in machine learning. **[6]**

c) Distinguish between artificial intelligence and machine learning. **[3]**

P.T.O.

Q5) a) What is unsupervised learning and explain types of unsupervised learning algorithm with example. **[6]**

b) Explain 2 methods for dimensionality reduction. **[6]**

c) Explain features with suitable examples. Explain Feature selection and feature extraction. **[6]**

OR

Q6) a) Write difference between unsupervised and semi supervised learning and supervised Learning. **[6]**

b) Write a short Note on PCA. **[6]**

c) What is dimensionality reduction? What are its advantages and disadvantages? **[6]**

Q7) a) Calculate the regression coefficient of X on Y and obtain the lines of regression for the following data - **[9]**

X	1	2	3	4	5	6	7
Y	9	8	10	12	11	13	14

b) What is an error w.r.t. Regression? Explain at least 4 performance measures for regression. **[9]**

OR

Q8) a) Define the following terms - **[9]**

i) Binary Classifiers nd Multi-Class Classification

ii) Multi-Class Classification-One-Vs-Rest

iii) Multi-Class Classification-One-Vs One

b) Fast learner:- + class **[9]**

Find i) Confusion Matrix ii) Find Recall iii) Precision iv) Accuracy

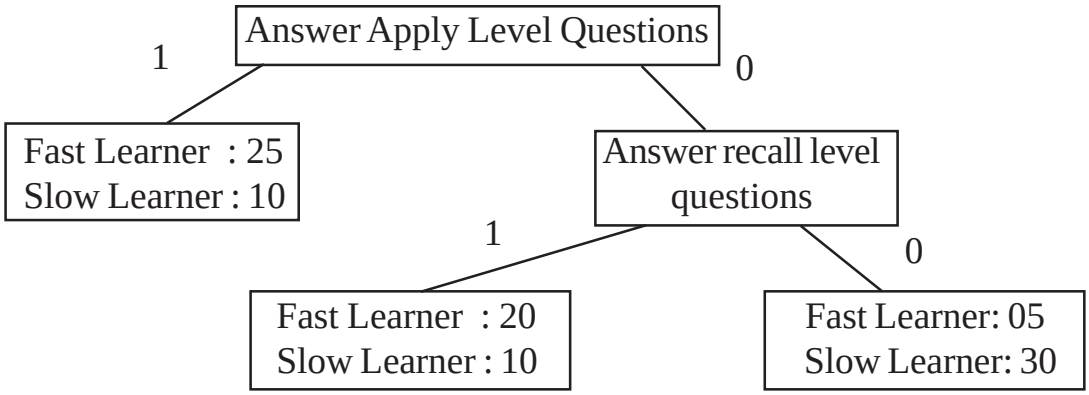

Total No. of Questions : 8] **SEAT No. :**

P992 **[Total No. of Pages : 3**

[5869]-379

S.E. (Artificial Intelligence and Machine Learning)

DATABASE MANAGEMENT SYSTEMS

(2019 Pattern) (Semester - IV)

Time : 2½ Hours] ***[Max. Marks : 70***

Instructions to the candidates:

1) ***Answer Q.1 or Q.2, Q.3 or Q.4, Q.5 or Q.6, Q.7 or Q.8.***
2) ***Neat diagrams must be drawn wherever necessary.***
3) ***Assume suitable data if necessary.***
4) ***Use of Scientific Calculator is permitted.***
5) ***Figures to the right indicate full marks.***

Q1) a) Write a note on: **[8]**

i) database Modification using SQL

ii) Set Operation

b) Consider the following relation : **[6]**

Customer (cid, cname, caddress, city ,state)

Order(oid,odate,aamount)

Customer and order are related with one to many relationship. Solve the following queries.

i) List the name of customer who belong to Maharashtra state, sorted on city.

ii) What are the name of all customer who placed the order between 01/01/2010 to 31/03/2011?

iii) Define constraint on order amount such that it should be always greater than zero.

c) Explain the concept of Dynamic and Embedded SQL. **[4]**

OR

P.T.O.

Q2) a) Explain the characteristics and advantage of SQL. **[9]**

b) Explain different aggregation functions in detail. **[9]**

Q3) a) Compute the closure of the following set F of functional dependencies for relation schema $R = (A, B, C, D, E)$. **[7]**

$A \rightarrow BC$

$CD \rightarrow E$

$B \rightarrow D$

$E \rightarrow A$

List the candidate keys for R.

b) State and explain armstrong's axioms and its properties. **[6]**

c) Explain Difference between 4NF & BCNF **[4]**

OR

Q4) a) Explain difference between 3NF and BCNF. **[7]**

b) Explain measures of query cost in detail. **[6]**

c) What is relational algebra. **[4]**

Q5) a) Explain: **[8]**

i) ACID properties

ii) Explain Timestamp Based Concurrency Control.

b) Explain time stamping method and deadlocks in concurrency control. **[6]**

c) Explain log based recovery in detail. **[4]**

OR

Q6) a) What is Log Based Recovery? Explain Deferred Database Modification and Immediate Database Modification. **[12]**

b) Write a note on "Shadow Paging". **[6]**

Q7) a) Explain the following : **[12]**

i) Internet Databases

ii) Mobile Databases

iii) Cloud Databases

iv) SQLite Databases

b) Explain XQuery FLWOR Expressions. **[5]**

OR

Q8) a) With a proper diagram, explain the architecture of Distributed Databases. **[9]**

b) With a suitable diagram, explain Centralized and Client-Server Architectures. **[8]**



Total No. of Questions : 8] **SEAT No. :**

P710 **[Total No. of Pages : 2**

[5869]-380
S.E. (Artificial Intelligence And Machine Learning)
COMPUTER GRAPHICS
(2019 Pattern) (Semester - IV)

Time : 2½ Hours] ***[Max. Marks : 70***

Instructions to the candidates:

1) ***Answer Q1 or Q2, Q3 or Q4, Q5 or Q6, Q7 or Q8.***
2) ***Neat diagrams must be drawn wherever necessary.***
3) ***Figures to the right side indicate full marks.***
4) ***Assume suitable data if necessary.***

Q1) a) Explain with diagram Cohen Sutherland line clipping algorithm. **[6]**

b) Compare homogeneous co-ordinate system and normalized co-ordinate system. **[6]**

c) Show that the Transformation matrix of reflection about line y=x is equivalent. to reflection relative to x-axis followed by anticlockwise rotation of 90 degree. **[6]**

OR

Q2) a) What is projection? Explain its types? **[6]**

b) Explain rotation about arbitrary axis in 3D transformation. **[6]**

c) Let ABCD be a rectangle window with A(20,20), B(90,20), C(90,70), D(20,70). **[6]**

Find the region codes for the end points & use Cohen Sutherland line clipping algorithm to clip the following line P1P2 with P1(10,30) and P2(80,90).

Q3) a) What is Shading. Explain with diagram Constant intensity shading method. **[6]**

b) Explain CMY and HSV color models. **[6]**

c) What is a segment? How do we create it? Why do we need segments? **[5]**

OR

P.T.O.

Q4) a) Explain the concept of segment table and display file. **[6]**

b) Explain with diagram Phong shading algorithm in detail. **[6]**

c) Define color gamut. Explain with diagram CIE Chromaticity Diagram. **[5]**

Q5) a) Differentiate between Bezier curve and B-spline curve. **[6]**

b) Write a short note on Interpolation and approximation **[6]**

c) Explain various types of animation languages. **[6]**

OR

Q6) a) Explain Koch curve and its application in detail. **[6]**

b) Write short notes on. **[6]**

I. Morphing

II. Design of animation sequence

c) What is fractal? Explain Hilbert curve in detail. **[6]**

Q7) a) Explain the physical modeling in Virtual Reality. **[6]**

b) Explain haptic feedback in Virtual Reality system. **[6]**

c) What is navigation and manipulation interfaces in virtual reality system? **[5]**

OR

Q8) a) What is graphics rendering pipeline in a Virtual Reality system. **[6]**

b) Explain gesture interfaces in Virtual Reality. **[6]**

c) What are sound displays in Virtual Reality? **[5]**



Total No. of Questions : 8] **SEAT No. :**

P711 **[Total No. of Pages : 3**

[5869] - 382
S.E. (Robotics and Automation)
STRENGTH OF MATERIALS
(2019 Pattern) (Semester - III) (211082)

Time : 2½ Hours] ***[Max. Marks : 70***

Instructions to the candidates:

1) ***Attempt Q.1 or Q.2, Q.3 or Q.4, Q.5 or Q.6, Q.7 or Q.8.***
2) ***Neat diagrams must be drawn wherevern necessary.***
3) ***Figures to the right side indicate full marks.***
4) ***Use of Calculator is allowed.***
5) ***Assume Suitable data if necessary***

Q1) a) A rectangular beam carries a uniformly distributed load of 3 kN/m over a span of 5 m. Determine maximum bending stress in the beam if section modulus of beam is 20000 mm^3. **[8]**

b) State the Flexural formula and explain the meaning of each term in it? **[5]**

c) What is neutral axis in case of bending? **[4]**

OR

Q2) a) A rectangular beam of breadth 100 mm and depth 200 mm is simply supported over a span of 4 m. The beam is loaded with a uniformly distributed load of 5 kN/m over the entire span. Find the maximum bending stresses. **[10]**

b) What do you mean by section modulus? State the formula for section modulus of rectangular and circular section. **[4]**

c) Draw Bending stress and shear stress distribution diagram for the rectangular section? **[3]**

Q3) a) An element in plane stress is subjected to stresses σ_x = 110.32 MPa, σ_y = 41.37 MPa, $\tau_{xy} = \tau_{yx}$ = 27.58 MPa. Determine stresses acting on the element inclined at an angle of 45°. **[10]**

b) What do you mean by limit of proportionality or elastic limit? **[4]**

c) Define Strain energy, Resilience and Proof resilience. **[3]**

OR

P.T.O.

Q4) a) A mild steel plate is 400 mm long, 200 mm wide, and 50 mm thick is subjected to gradually applied load of 1200 kN. Calculate proof resilience, modulus of resilience, and elongation. Assume modulus of elasticity as 2×10^5 MPa. **[8]**

b) Evaluate the principal stresses and principal planes for the state of stress shown in Figure. **[9]**

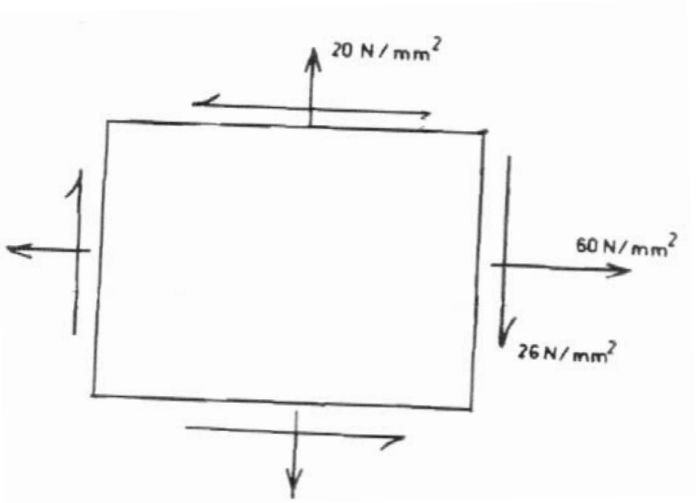

Q5) a) A hollow shaft diameter ratio 3/5 is required to transmit 450Kw at 1200pm., the shearing stress in the shaft must not exceed 60N/mm^2 and the twist in a length of 2.5m is not to exceed 1°. Calculate the minimum external diameter of the shaft. Take, C = 8.0 kN/mm^2. **[10]**

b) Hollow cylindrical drum 750 mm diameter and 2.5 mm long has a shell thickness of 10 mm. If the drum is subjected to an internal pressure of 2.6 N/mm^2, determine the change in diameter, change in length and change in volume. Assume E=2.1×10^5 MPa and poisson ration of 0.3. **[8]**

OR

Q6) a) What must be the length of a 5mm diameter aluminum wire so that it can be twisted through 1 complete revolution without exceeding a shear stress of 42 N/mm^2. Take, G=27 GPa. **[8]**

b) State the Assumption in Pure Torsion. **[4]**

c) State the Torsional equation stating the meaning of every term in it. **[6]**

Q7) a) A beam 6m long, simply supported at its ends, is carrying a point load of 50 kN at its centre. The moment of inertia of the beam is 78×10^6 mm^4. If modulus of elasticity for the material of the beam = 2.1×10^5 N/mm^2. Calculate deflection at the centre of the beam and slope at the supports. **[9]**

b) A beam of uniform rectangular section 200 mm wide and 300 mm deep is simply supported at its ends. It carries a uniformly distributed load of 9 kN/m run over the entire span of 5m. If the value of modulus of elasticity for the beam material is 1×10^4 N/mm^2, find the slope at the supports and maximum deflection. **[9]**

OR

Q8) a) A beam carries 4 m long simply supported at its ends, carries a point load W at its center. If the slope at the ends of the beam is not to exceed 1°, find the deflection at the center of the beam. **[9]**

b) Determine slope at the left support, deflection under the load and maximum deflection of a simply supported beam of length 5m, which is carrying a point load of 5 kN at a distance of 3 m from the left end. Take modulus of elasticity = 2×10^5 N/mm^2 and moment of inertia = 1×10^8 mm^4. **[9]**

Total No. of Questions : 8]

SEAT No. :

P712

[Total No. of Pages : 3

[5869]-383

S.E. (Robotics and Automation Engineering)

INDUSTRIAL ELECTRONICS AND ELECTRICAL TECHNOLOGY

(Semester - III) (2019 Pattern) (211501) (Theory)

Time : 2½ Hours] *[Max. Marks : 70*

Instructions to the candidates:

1) ***Solve Q.1 or Q.2, Q.3 or Q.4, Q.5 or Q.6, Q.7 or Q.8.***
2) ***Neat diagrams must be drawn wherever necessary.***
3) ***Figures to the right indicate full marks.***
4) ***Assume suitable data, if necessary.***
5) ***Use of non-programmable calculator is allowed.***

Q1) a) Explain the following functions in detail **[6]**

i) analogRead()

ii) analogWrite()

b) What is accelerometer? Explain how does it works. Mention the types of accelerometer. **[6]**

c) Draw and explain the interfacing diagram of Atmega 328P microcontroller to control the operation of DC motor using PWM. **[6]**

OR

Q2) a) Draw and explain the interfacing of Atmega 328P microcontroller with the temperature sensor (LM35). **[6]**

b) Explain construction, working of LVDT with neat diagram. **[6]**

c) Explain in detail the concept of ADC in Atmega 328P. **[6]**

Q3) a) What are the different types of dc motors based on the connection of field and armature winding? Draw their figures and write voltage and current relationship. **[6]**

P.T.O.

b) A dc series motor is running with a speed of 800 rpm while taking a current of 15 A from the supply. If the load is change such that the current drawn by the motor is increased to 40 A, calculate the speed of the motor on new load. The armature and series field winding resistances are 0.2 Ω and 0.3 Ω respectively. Assume the flux is proportional to the current. Assume the supply voltage as 240 V. **[6]**

c) Why not to start dc series motor on no load? **[5]**

OR

Q4) a) A 240 V dc series motor takes 25 A when running at 750 rpm. Calculate the speed at which motor will run if a resistance equal to the field winding resistance shunts the field winding and the load torque is increased by 50%. Armature resistance is 0.15 Ω and series field resistance is 0.1 Ω. Assume the flux produced is proportional to the field current. **[6]**

b) Draw neat diagram of three-point starter for dc shunt motor and explain its working. **[6]**

c) Explain Ward Leonard system of speed control for dc motor. **[5]**

Q5) a) The full load power input to 4 pole, 50 Hz three-phase induction motor is 45 kW, running at 1440 rpm. Calculate its full load efficiency if stator losses are 1000 W and frictional losses are 650 W. **[6]**

b) Explain the working principle of three-phase induction motor with neat diagram. **[6]**

c) Derive the torque equation of three-phase induction motor. **[6]**

OR

Q6) a) Sketch and explain the typical torque slip characteristics of three-phase induction motor. **[6]**

b) Compare the squirrel cage and wound rotor induction motor in detail. **[6]**

c) A 4- pole, 50 Hz, 7.46 kW motor has, at rated voltage and frequency, a starting torque of 150% and a maximum torque of 200% of full load torque. Determine (i) full load speed; (ii) speed at maximum torque. **[6]**

Q7) a) Explain construction and working of stepper motor with neat sketch. **[6]**

b) Explain construction and working of linear induction motor (LIM) with neat sketch. **[6]**

c) Explain the construction and working of Universal motor with neat sketch. **[5]**

OR

Q8) a) Explain construction and working of Brush Less DC motor (BLDC) with neat sketch. **[6]**

b) Explain the construction and working of shaded pole induction motor with neat sketch. **[6]**

c) Compare ac series and dc series motor in detail. **[5]**

❄ ❄ ❄

Total No. of Questions : 8]

SEAT No. :

P713

[Total No. of Pages : 2

[5869]-384

S.E. (Robotics and Automation)
MANUFACTURING TECHNOLOGY
(2019 Pattern) (Semester - III) (211502)

Time : 2½ Hours] *[Max. Marks : 70*

Instructions to the candidates:

1) ***Answer Q.No.1 or Q.No.2, Q.No.3 or Q.No.4, Q.No.5 or Q.No.6, Q.No.7 or Q.No.8.***
2) ***Neat diagrams must be drawn wherever necessary.***
3) ***Figures to the right side indicate full marks.***
4) ***Assume suitable data if necessary.***
5) ***Use of logarithmic table, Slide rule and electronic pocket calculator is allowed.***

Q1) a) Classify extrusion processes. Explain Hydrostatic extrusion with neat sketch. **[9]**

b) Explain wire drawing operation with its schematic diagram. **[8]**

OR

Q2) a) Explain any four extrusion process variables with sketch. **[9]**

b) Discuss forces required in drawing, multiple drawing and strip drawing. **[8]**

Q3) a) Explain the different types of welding electrodes used in arc welding process? **[9]**

b) Describe the flux materials used in TIG welding? **[8]**

OR

Q4) a) How does the welding of high carbon steels differ from that of medium carbon steels and low carbon steels? Explain. **[9]**

b) What precautions should be taken for welding high reflective materials using laser welding? **[8]**

P.T.O.

Q5) a) Explain with neat diagram construction and working of USM processes. **[9]**

b) Draw schematic diagram of Abrasive Jet Machining (AJM). Explain its construction and working. **[9]**

OR

Q6) a) Explain briefly EDM process characteristics. **[9]**

b) Explain the construction and working principles of Plasma Arc Machining (PAM) with neat sketch. **[9]**

Q7) a) How to perform loading and unloading of parts in machining operations using robots? **[9]**

b) Elaborate on repetitive work cycle operations. **[9]**

OR

Q8) a) Explain assembly of parts using robots. **[9]**

b) Application of robot in arc welding process. **[9]**



Total No. of Questions : 8]

SEAT No. :

P714

[Total No. of Pages : 2

[5869]-385

S.E. (Robotics & Automation Engineering)

MATERIAL SCIENCE AND ENGINEERING METALLURGY

(2019 Pattern) (Semester - III) (211503)

Time : 2½ Hours] *[Max. Marks : 70*

Instructions to the candidates:

1) ***Attempt Q.1 or Q.2, Q.3 or Q.4, Q.5 or Q.6, Q.7 or Q.8.***
2) ***Assume suitable data if necessary.***
3) ***Figures to the right indicate full marks.***
4) ***Draw neat figures whenever necessary.***
5) ***Use of scientific calculators is allowed.***
6) ***Use of cell phone is prohibited in the examination hall.***

Q1) a) What is powder Metallurgy? Discuss advantage and disadvantage. **[8]**

b) Explain term : **[8]**

i) Self-lubricating bearings

ii) Cermets

OR

Q2) a) Write note on : **[8]**

i) Diamond impregnated Cutting Tools

ii) Cemented carbide tipped tools

b) Describe any two component which can be manufactured by only powder metallurgy. **[8]**

Q3) a) Define following. **[10]**

i) Ferrite

ii) Austenite

iii) Pearlite

iv) Cementite

v) Bainite

b) Draw Fe-C equilibrium diagram and label the temperature, compositions and phase. **[8]**

OR

P.T.O.

Q4) a) What is steel? What do you understand by eutectoid, hypereutectoid and hypoeutectoid steel? **[10]**

b) Explain the following with neat diagram. **[8]**

i) Peritectic transformation

ii) Eutectic transformation

Q5) a) Draw and explain the method of plotting TTT diagram and what information is obtained from this diagram? **[10]**

b) Explain terms : **[8]**

i) Quenching

ii) Annealing

iii) Normalizing

iv) Carburizing

OR

Q6) a) Define hardenability. How it is measured? **[8]**

b) What is retained austenite? Why it is not desirable? **[10]**

Q7) a) Write note on High temperature alloy. **[9]**

b) Write note on Copper and its Alloy. **[9]**

OR

Q8) a) Write note on Aluminum and its Alloy. **[9]**

b) Write note on Composite Material and Nano Materials. **[9]**

⌘⌘⌘

Total No. of Questions : 8]

SEAT No. :

P2296

[Total No. of Pages : 2

[5869] - 386

S.E. (Robotics and Automation)

INDUSTRIAL ENGINEERING AND MANAGEMENT

(2019 Pattern) (Semester - IV) (211508)

Time : 2½ Hours] *[Max. Marks : 70*

Instructions to the candidates :

1) ***Answer Q.1 or Q.2, Q.3 or Q.4, Q.5 or Q.6, Q.7 or Q.8.***
2) ***Neat diagrams must be drawn wherever necessary.***
3) ***Figures to the right side indicate full marks.***
4) ***Assume suitable data if necessary.***

Q1) a) Describe the characteristics of successful entrepreneur. **[8]**

b) Describe various types of entrepreneur. **[9]**

OR

Q2) a) Describe the skills required for an entrepreneur. **[8]**

b) Describe the factors which motivates entrepreneurship. **[9]**

Q3) a) Define Industrial Engineering. Describe the role of Industrial engineer. **[8]**

b) Define Productivity. Total and Partial Productivity. **[9]**

The following data is available for a company. The output is Rs. 100000. Calculate Partial productivity considering the input resources and total productivity

Input Resources	Rs.
Labour	20,000
Material	40,000
Capital	25,000
Energy	5,000
Other expenses	7,500

OR

Q4) a) Define Industrial Engineering. Describe various tools and techniques of Industrial Engineering. **[8]**

b) Define Basic work content. Describe the factors which affects the basic work content (i.e. excess work content). **[9]**

P.T.O.

Q5) a) Define Method study. Describe various steps of method study. State the objectives of method study. **[9]**

b) Describe Flow process chart with suitable illustration and appropriate symbols. **[9]**

OR

Q6) a) Describe Micro motion study. Describe various therbligs used in Micro motion study. **[9]**

b) Describe Two Handed process chart for the activities carried out by a photo-copy (Xerox) machine operator with appropriate symbols. **[9]**

Q7) a) Define Time study. Describe various steps of time study. **[9]**

b) The following data is available for a cycle using stop watch time study. **[9]**
Determine

i) Normal time for a given cycle

ii) Standard time (Assuming 15% Allowance)

	Time Recorded (minutes)				
Element No.	Cycle 1	Cycle 2	Cycle 3	Cycle4	Rating (%)
1	1	1.1	1.2	0.9	110
2	1.5	1.4	1.5	1.6	Machine element
3	3	3.1	2.9	3.1	120
4	2	1.9	2	2	95
5	2.5	2.5	2.4	2.6	100
6	1.4	1.6	1.5	1.4	Machine element
7	2	1.9	2	2.1	100

OR

Q8) a) Describe various types of rating system used in time study. **[9]**

b) The following data is collected from work sampling study. **[9]**
Determine

i) Normal time

ii) Standard time (Assuming 15% Allowance)

Duration of the study(Hrs.)	48
Total number of units produced during study	160
Total number of observations	750
Number of observations of productive work	600
Number of observations of machine controlled work	400
Average performance rating	90
Total allowances (%)	15

▽▽▽▽

Total No. of Questions : 8]

SEAT No. : ____

P715

[Total No. of Pages : 2

[5869]-387

S.E. (Robotics & Automation Engineering)

CONTROL SYSTEM ENGINEERING

(2019 Pattern) (Semester - IV)

Time : 2½ Hours] ***[Max. Marks : 70***

Instructions to the candidates:

1) ***All question are compulsory i.e. Solve Q.1 or Q.2, Q.3 or Q.4, Q.5 or Q6, Q.7 or Q.8.***
2) ***Assume suitable data if necessary.***
3) ***Use of electronic pocket calculator is allowed.***
4) ***Neat diagrams must be drawn wherever necessary.***

Q1) a) Find the range of K for stability unity feedback system with characteristic Equation. **[9]**

G(S) = K/S (S+2) (S+4) (S+6).

Also define :

i) Pole

ii) Zero

iii) S-plane

b) Explain Routh's array with stability criteria, state advantages and disadvantages of Routh's criteria. **[9]**

OR

Q2) a) Draw root locus for the system G(S) H(S) = K/S (S+3) (S+6), obtain the value of K When $\varepsilon = 0.6$ from root locus. **[9]**

b) What is stability? Explain with diagram stable, unstable, marginally and conditionally stable system with locations of roots in s plane. **[9]**

Q3) a) Define frequency response of a system & explain **[8]**

i) Frequency Domain Analysis

ii) Nyquist Stability Criteria

b) Find the stability of following system using Nyquist plot. **[9]**

$G\,H(S) = 1 / s^3 (s+1)$

OR

P.T.O.

Q4) a) Define phase margin and gain margin. Explain lead lag compensating network. **[8]**

b) What are polar plots? Draw the polar plot for G (s) = 1 + as. **[9]**

Q5) a) Explain digital control system with block diagram. Enlist its advantages and disadvantages. **[8]**

b) Explain the architecture of PLC with neat diagram. **[9]**

OR

Q6) a) Explain input and output field devices used in PLC (any 8). **[8]**

b) State sampling theorem, explain the process of sampling and digitization with waveform. **[9]**

Q7) a) Enlist phase lead design steps using bode diagram. **[8]**

b) Design lead compensator for the system with OLTF, G(s) = 9/s (s+3) to meet following Specifications. **[10]**

i) Steady state error for ramp input to be less than or equal to 0.05.

ii) Phase margin of at least 45 degree.

OR

Q8) a) What is compensator? Write the design steps of lead compensator using root locus approach. **[8]**

b) Design the lead compensator for a system with transfer function G(s) = 2s/s (s+6) to meet following specifications **[10]**

i) Mp = 5%

ii) T_s = 0.75 sec.



Total No. of Questions : 8]

SEAT No. :

P716

[Total No. of Pages : 3

[5869]-388
S.E. (Robotics and Automation)
DESIGN OF MACHINE ELEMENTS
(2019 Pattern) (Semester - IV)

Time : 2½ Hours] *[Max. Marks : 70*

Instructions to the candidates :

1) ***Solve Q1 or Q2, Q3 or Q4, Q5 or Q6, Q7 or Q8.***
2) ***Use of scientific calculator is allowed.***
3) ***Figures to the right side indicate full marks.***

Q1) a) Discuss the different types of threads used in power screw. **[6]**

b) Define lead angle, major diameter, lead, and pitch in terms of power screw. **[4]**

c) The cutter of a broaching machine is pulled by square threaded screw of 55 mm external diameter and 10 mm pitch. The operating nut takes the axial load of 400 N on a flat surface of 60 mm and 90 mm internal and external diameter respectively. If the coefficient of friction is 0.15 for all contract surfaces on the nut, determine the power required to rotate the operating nut when the cutting speed is 6 m/min. Also find the efficiency of the screw. **[8]**

OR

Q2) a) A vertical two start square threaded screw of a 100 mm mean diameter and 20 mm pitch supports a vertical load of 18 kN. The axial thrust on the screw is taken by a collar bearing of 250 mm outside diameter and 100 mm inside diameter. Find the force required at the end of a lever which is 400 mm long in order to lift and lower the load. The coefficient of friction for the vertical screw and nut is 0.15 and that for collar bearing is 0.20. **[8]**

b) Define core diameter, minor diameter, left hand screw, and Multiple thread screw in terms of power screw. **[4]**

c) What is meant by power screw? Give its advantages, disadvantages and applications. **[6]**

P.T.O.

Q3) a) What is meant by springs? Explain different types of springs. **[6]**

b) Solid length, Free length, Spring index, and Spring rate in terms of spring. **[4]**

c) A helical spring is made from a wire of 6 mm diameter and has outside diameter of 75 mm. If the permissible shear stress is 350 MPa and modulus of rigidity 84 kN/mm^2, find the axial load which the spring can carry and the deflection per active turn. **[8]**

OR

Q4) a) Explain the Surge in Springs. **[6]**

b) Give any 2 applications of springs and any 2 material required for manufacturing of springs. **[4]**

c) Design a spring for a balance to measure 0 to 1000 N over a scale of length 80 mm. The spring is to be enclosed in a casing of 25 mm diameter. The approximate number of turns is 30. The modulus of rigidity is 85 kN/mm^2. Also calculate the maximum shear stress induced. **[8]**

Q5) a) What is spur gear? Enlist any 2 applications of spur gear and Give its detail classification. **[9]**

b) A bronze spur pinion rotating at 600 r.p.m. Drives a cast iron spur gear at a transmission ratio of 4:1. The allowable static stresses for the bronze pinion and cast iron gear are 84 MPa and 105 MPa respectively. The pinion has 16 standard 20° Full depth involute teeth of module 8 mm. The face width of both the gears is 90 mm. Find the power that can be transmitted from the standpoint of strength. **[8]**

OR

Q6) a) Define the terms in respective of spur gears: Module, Addendum, Pitch circle diameter, and Backlash. **[4]**

b) Discuss the Causes of Gear Tooth Failure. **[5]**

c) The following particulars of a single reduction spur gear are given: Gear ratio = 10:1; Distance between centres = 660 mm approximately; Pinion transmits 500 kW at 1800 r.p.m.; Involute teeth of standard proportions (addendum = m) with pressure angle of 22.5°; Permissible normal pressure between teeth = 175 N per mm of width. Find : **[8]**

i) The nearest standard module if no interference is to occur;

ii) The number of teeth on each wheel;

iii) The necessary width of the pinion; and.

iv) The load on the bearings of the wheels due to power transmitted.

Q7) a) What are rolling contact bearings? Discuss their advantages over sliding contact bearings. **[4]**

b) Write short note on classifications and different types of antifriction bearings. **[5]**

c) A shaft rotating at constant speed is subjected to variable load. The bearings supporting the shaft are subjected to stationary equivalent radial load of 3 kN for 10 per cent of time, 2 kN for 20 per cent of time, 1 kN for 30 per cent of time and no load for remaining time of cycle. If the total life expected for the bearing is 20×10^6 revolutions at 95 per cent reliability, calculate dynamic load rating of the ball bearing. **[8]**

OR

Q8) a) Where are the angular contact and self-aligning ball bearings used? Draw neat sketches of these bearings. **[7]**

b) How do you express the life of a bearing? What is an average or median life? **[6]**

c) Explain how the following factors influence the life of a bearing: **[4]**

i) Load

ii) Speed

iii) Temperature

iv) Reliability

Total No. of Questions : 8] **SEAT No. :**

P717 **[Total No. of Pages : 2**

[5869]-389

S.E. (Robotics & Automation Engineering)

METROLOGY AND QUALITY ASSURANCE

(2019 Pattern) (Semester - IV)

Time : 2½ Hours] ***[Max. Marks : 70***

Instructions to the candidates:

1) ***Answer Q.1 or Q.2, Q.3 or Q.4, Q.5 or Q.6, Q.7 or Q.8.***
2) ***Assume suitable data if necessary.***
3) ***Use of electronic pocket calculator is allowed.***
4) ***Neat diagrams must be drawn wherever necessary.***

Q1) a) Write short notes on Talysurf for surface roughness measurement with systematic diagram. **[9]**

b) Explain Tomlinson surface tester with neat sketch. **[8]**

OR

Q2) a) Explain concept of RMS and CLA value for surface roughness measurement. **[9]**

b) Explain terms in gear with neat diagram,

i) Module ii) Diametral pitch

iii) Circular pitch iv) Pressure angle **[8]**

Q3) a) Explain histogram or frequency distribution diagram. **[8]**

b) What is cost of quality? Explain its types. **[9]**

OR

Q4) a) Explain following SQC tools

i) X and R chart ii) P chart **[8]**

b) Explain Process Capability Index **[9]**

P.T.O.

Q5) a) Explain function, methodology, and advantages of quality audit. **[9]**

b) Write short notes on **[9]**

i) Kaizen

ii) Kanban

OR

Q6) a) Explain ISO 9000 standards in detail. **[9]**

b) Explain in detail what is TQM and give its significance. **[9]**

Q7) a) Write short notes on steps to implement quality policy. **[9]**

b) What is Quality Management System (QMS). **[9]**

OR

Q8) a) Write short notes on Just in time (JIT). **[9]**

b) Explain quality function deployment and its benefits. **[9]**



Total No. of Questions : 8] **SEAT No. :**

P718 **[Total No. of Pages : 2**

[5869]-390
S.E. (Robotics & Automation)
COMPUTER GRAPHICS FOR ROBOTICS
(2019 Pattern) (Semester - IV) (211512)

Time : 2½ Hours] ***[Max. Marks : 70***

Instructions to the candidates:

1) ***Neat diagrams must be drawn wherever necessary.***
2) ***Figures to the right side indicate full marks.***
3) ***Assume suitable data if necessary.***
4) ***Use of calculator is allowed.***

Q1) a) The specific volumes (v) of superheated steam is listed in table below for various temperatures (T) at a pressure of 20 bar absolute. Determine v at T = 750°F using Lagrange interpolation method. **[9]**

T,°F	700	720	740	760
v,cm^3/gm	6.099	7.606	8.777	9.681

b) Derive an expression for interpolating function of a Hermite Cubic interpolation. **[8]**

OR

Q2) a) For the following data, use inverse distance weighting method to interpolate at x = 2 and y = 1. **[10]**

x	0	1	2	4
y	1	3	2	2
z	20	58	23	105

b) Write note on: Interpolating quaternions. **[7]**

Q3) a) Obtain x-y co-ordinates of a point on Bezier curve at parameter value t = 0.3 considering control points as (1, 4), (3, 6), (4, 2) and (5, 10). **[10]**

b) What are B-spline curves? How the geometric continuity is determined for B spline curves? **[7]**

OR

P.T.O.

Q4) a) Obtain x, y and z co-ordinate of a point on the quadratic Bazier surface patch at u = 0.3 and v = 0.7 using following control points: **[8]**

P_{00}= (0, 0, 0) P_{01}= (1, 1, 0) P_{02}= (2, 0, 0)

P_{10}= (0, 1, 1) P_{11}= (1, 2, 1) P_{12}= (2, 1, 1)

P_{20}= (0, 0, 2) P_{21}= (1, 1, 2) P_{22}= (2, 0, 2)

b) Explain the applications of B spline and Bezier curves in robot path planning. **[9]**

Q5) a) Obtain an equation of a plane inclined to Y axis and X axis by 45°. The plane is parallel to X axis and contains a point (0, 0, 2). **[10]**

b) Determine the point of intersection of two lines AB and CD having co-ordinates of point A(3, 1, 2), point B(4, 4, 6), point C(2, 1, 5) and point D(3.857, 2.285, 2.428). Consider parameter *t* for line AB as 0.7 and parameters for line CD as 0.3. **[8]**

OR

Q6) a) Obtain the equation of a line of intersection of XY plane and YZ plane. Consider the point (0, 3, 2) is in YZ plane and point (3, 2, 0) is in XY plane. **[10]**

b) A triangle has vertices P_1(l, 2), P_2(4, 4), P_3(3, 6). Determine whether point *P*(2, 4) lies inside the triangle, outside triangle or on the edge. If it is on the edge then mention that edge. **[8]**

Q7) a) Obtain the table containing all basis blades in 3 dimension. **[9]**

b) Explain the applications of applied geometric algebra for modelling of robotics physics. **[9]**

OR

Q8) a) Show that the multiplication of basis blades e_{12} and e_{13} is $-e_{23}$. **[9]**

b) Write short note on: Outer product of 3D vectors **[9]**

Total No. of Questions : 8] **SEAT No. :**

P718 **[Total No. of Pages : 2**

[5869]-390
S.E. (Robotics & Automation)
COMPUTER GRAPHICS FOR ROBOTICS
(2019 Pattern) (Semester - IV) (211512)

Time : 2½ Hours] ***[Max. Marks : 70***

Instructions to the candidates:

1) ***Neat diagrams must be drawn wherever necessary.***
2) ***Figures to the right side indicate full marks.***
3) ***Assume suitable data if necessary.***
4) ***Use of calculator is allowed.***

Q1) a) The specific volumes (v) of superheated steam is listed in table below for various temperatures (T) at a pressure of 20 bar absolute. Determine v at T = 750°F using Lagrange interpolation method. **[9]**

T,°F	700	720	740	760
v,cm^3/gm	6.099	7.606	8.777	9.681

b) Derive an expression for interpolating function of a Hermite Cubic interpolation. **[8]**

OR

Q2) a) For the following data, use inverse distance weighting method to interpolate at x = 2 and y = 1. **[10]**

x	0	1	2	4
y	1	3	2	2
z	20	58	23	105

b) Write note on: Interpolating quaternions. **[7]**

Q3) a) Obtain x-y co-ordinates of a point on Bezier curve at parameter value t = 0.3 considering control points as (1, 4), (3, 6), (4, 2) and (5, 10). **[10]**

b) What are B-spline curves? How the geometric continuity is determined for B spline curves? **[7]**

OR

P.T.O.

Q4) a) Obtain x, y and z co-ordinate of a point on the quadratic Bazier surface patch at u = 0.3 and v = 0.7 using following control points: **[8]**

P_{00}= (0, 0, 0) P_{01}= (1, 1, 0) P_{02}= (2, 0, 0)

P_{10}= (0, 1, 1) P_{11}= (1, 2, 1) P_{12}= (2, 1, 1)

P_{20}= (0, 0, 2) P_{21}= (1, 1, 2) P_{22}= (2, 0, 2)

b) Explain the applications of B spline and Bezier curves in robot path planning. **[9]**

Q5) a) Obtain an equation of a plane inclined to Y axis and X axis by 45°. The plane is parallel to X axis and contains a point (0, 0, 2). **[10]**

b) Determine the point of intersection of two lines AB and CD having co-ordinates of point A(3, 1, 2), point B(4, 4, 6), point C(2, 1, 5) and point D(3.857, 2.285, 2.428). Consider parameter *t* for line AB as 0.7 and parameters for line CD as 0.3. **[8]**

OR

Q6) a) Obtain the equation of a line of intersection of XY plane and YZ plane. Consider the point (0, 3, 2) is in YZ plane and point (3, 2, 0) is in XY plane. **[10]**

b) A triangle has vertices P_1(l, 2), P_2(4, 4), P_3(3, 6). Determine whether point *P*(2, 4) lies inside the triangle, outside triangle or on the edge. If it is on the edge then mention that edge. **[8]**

Q7) a) Obtain the table containing all basis blades in 3 dimension. **[9]**

b) Explain the applications of applied geometric algebra for modelling of robotics physics. **[9]**

OR

Q8) a) Show that the multiplication of basis blades e_{12} and e_{13} is $-e_{23}$. **[9]**

b) Write short note on: Outer product of 3D vectors **[9]**

Total No. of Questions : 6]

SEAT No. :

P4563

[Total No. of Pages : 2

[5869]-401

S.E. (Chemical)

MECHANICAL OPERATIONS

(2015 Pattern) (Semester - II) (209351)

Time : 2 Hours] *[Max. Marks : 50*

Instructions to the candidates:

1) ***Answer Q.1 or Q.2, Q.3 or Q.4, Q.5 or Q.6.***
2) ***Neat diagram must be drawn whenever necessary.***
3) ***Figures to right indicate full marks.***
4) ***Assume suitable data, if necessary.***

Q1) a) Write an explanatory note on impellers. **[5]**

b) Write notes on : **[12]**

i) Flow pattern in baffled and unbaffled tanks.

ii) Sigma mixer

OR

Q2) a) What are the various types of mixers used for paste and plastic materials? Explain any two in brief. **[7]**

b) Explain following mixing conditions with sketch **[10]**

i) Radial flow

ii) Axial flow impellers

Q3) a) Explain in detail plate and frame filter. **[8]**

b) What are the various factors which affect the rate of filtration? Derive an expression to calculate the rate of filtration. **[8]**

OR

Q4) a) Enlist the different types of centrifugal filters. Explain any one in detail. **[8]**

b) Explain with a neat sketch rotary drum filter. **[8]**

P.T.O.

Q5) a) Describe in detail elements of belt conveyor what are the various merits and applications of belt conveyors? **[9]**

b) Write a short note on screw conveyor. **[8]**

OR

Q6) Write notes on : **[17]**

a) Different belt arrangements in belt conveyor.

b) Bucket elevator.

c) Chain and flight conveyor.

▽▽▽▽

Total No. of Questions : 8]

SEAT No. : ____

P3864

[Total No. of Pages : 2

[5869]-402
S.E. (Chemical Engineering)
CHEMISTRY-II
(2015 Pattern) (Semester - II) (209347)

Time : 2 Hours] ***[Max. Marks : 50***

Instructions to the candidates:

1) ***Attempt questions 1 or 2, 3 or 4, 5 or 6, 7 or 8.***
2) ***Figures to the right indicate full marks.***
3) ***Assume suitable data, if necessary.***

Q1) a) What is action of following on glucose. **[4]**

i) Bromine water

ii) Acetic anhydride

b) What is Zwitterion Describe isoelectric point. **[4]**

c) Explain giving reason, why all transition metals exhibit variable oxidation states. **[4]**

OR

Q2) a) Draw structure of amylose, amylopectin. **[4]**

b) Explain that tetrahedral complexes are high spin. **[4]**

c) Write IUPAC name of following complexes. **[4]**

i) $[Cu(NH_3)_4]^{2+}$

ii) $Ku[Fe(CN)_6]$

iii) $[Ni(CO)_4]$

iv) $[Pt(NH_3)_4]Cl_4$

Q3) a) What is Precipitation titration? Explain by Fajans method. **[6]**

b) Explain strong acid - strong base titration with titration curve. **[4]**

c) Explain mechanism of catalysis reaction involving formation of activated complex. **[3]**

OR

P.T.O.

Q4) a) What is adsorption isotherm? Explain langmuir adsorption isotherms. **[6]**

b) Give mechanism of metal coordination compound catalysed reaction in methanol carbonylation. **[4]**

c) 100 ml of 0.1 N weak acid (ka = 1.7×10^{-5}) is titrated against 0.2 N NaOH. Calculate pH of mixture at 35ml of NaOH. **[3]**

Q5) a) What is conformational isomerism? Give conformation of n-butane. **[5]**

b) Give brief description of optical isomerism. **[4]**

c) Assign R & 'S' conformation in Lactic acid. **[3]**

OR

Q6) a) Explain various types of conformation in cyclohexane. **[5]**

b) Explain geometrical isomerism with one double bond. **[4]**

c) Define the terms enantiomers and diastereomers. **[3]**

Q7) a) What are the qualities of good drug? **[5]**

b) Give the synthesis of aspirin and paracetamol **[4]**

c) Explain meaning of **[4]**

i) Analgesic

ii) Antipyretic

OR

Q8) a) Give synthesis, properties & uses of **[5]**

i) Carbaryl

ii) Parathion

b) Give the structural formula, preparation-uses of indole acetic acid. **[4]**

c) Define insecticides & give the classification of insecticides. **[4]**



Total No. of Questions : 8]

SEAT No. :

P3865

[Total No. of Pages : 3

[5869] - 403
S. E. (Chemical)
HEAT TRANSFER
(2015 Pattern) (Semester - II) (209348)

Time : 2 Hours] ***[Max. Marks : 50***

Instructions to the candidates: .

1) ***Neat diagrams must be drawn wherever necessary.***
2) ***Assume suitable data, if necessary.***
3) ***Use of logarithmic tables, slide rule, Mollier charts, electronic pocket calculator and steam tables is permitted.***

Q1) a) State and explain the following: **[6]**

i) Fourier's Law of conduction

ii) Newton's Law of cooling

iii) Stefan-Boltzmann Law

b) Calculate the heat transfer coefficient for a fluid flowing through a tube having inside diameter 40 mm at a rate of 5500 kg/h. Assume that the fluid is being heated. **[6]**

Data:- Properties of flowing fluid at mean bulk temperature are:

$\mu = 0.004$ N.s/m^2 $\rho = 1070$ kg/m^3

$C_p = 1.26$ kJ/kg .K $K = 0.384$ W/m.K

OR

Q2) a) Distinguish between Natural Convection and Forced Convection. **[6]**

b) An aluminium rod of 30 mm in diameter and 100 mm long projects from a wall which is maintained at 530 K into the environment maintained at 290 K Calculate the heat lost by rod assuming that rod end is insulated. Also find the efficiency. **[6]**

Data: k for aluminium = 200 W/m K

h between-rod surface and environment = 15 W/m^2 K.

P.T.O.

Q3) a) Draw a neat sketch and explain different regimes in pool boiling. **[6]**

b) A vertical plate 30 × 30 cm is exposed to steam at atmospheric pressure. The plate is at 371 K. Calculate the average heat transfer coefficient, the heat transfer rate and mass of steam condensed per hour. **[7]**

Data:- Properties of the condensate at mean film temperature are:

$\mu = 2.82 \times 10^{-4}$ kg/(m.s) $\rho = 960$ kg/m^3

$\lambda = 2255$ kJ/kg K = 0.68 W/(m.K)

Saturation temperature of steam = 373 K (100°C)

Assume that the flow of condensate is laminar.

OR

Q4) a) Differentiate between Drop-wise Condensation and Film-wise Condensation. **[6]**

b) Two large parallel planes with emissivities 0.3 and 0.6 exchange heat. Calculate the percentage reduction in heat transfer when a radiation shield of emissivity 0.12 is placed between them. **[7]**

Q5) a) Explain: **[6]**

i) Fouling factor

ii) Plate heat exchanger

b) A counter current double pipe heat exchanger has oil in the tube, being cooled from 413 K to 373 K with help of the water at 303 K, which gets heated to 343 K. if water side coefficient is 2.5 kW/m^2 K, oil side is 1.0 W/m^2 K and a fouling coefficient of 0.714 kW/m^2 K, neglecting resistance due to tube wall, Calculate the heat transfer area for water flow rate of 5 kg/s. **[7]**

Heat capacity of water is 4.18 kJ/kg. K.

OR

Q6) a) What are heat exchanger? Give the detailed classification. **[6]**

b) A heat exchanger is designed to cool 300 Kg/hr of liquid 150°C having specific heat value 3350 J/kg.K using parallel flow arrangement. Cooling water is available at 15°C. If the overall heat transfer coefficient is 1100 W/m^2 K, Surface area available for heat transfer is 0.4 m^2, Calculate outlet temperature of fluids and effectiveness of heat exchanger. **[7]**

For water Cp = 4187 J/kg. K. Take water flow rate as 800 Kg/hr

Q7) a) Write a short note on multiple effect evaporators. **[5]**

b) 1000 kg/hr. of a dilute solution of sodium hydroxide containing 10% NaOH is to be concentrated to 40% NaOH by weight in a single effect evaporator. The feed is available at 25°C. Boiling point of the solution may be considered as 100°C. Specific heat of dilute solution is 4180 J/kg K. Latent heat of vaporization of water is 2239 kJ/kg. Saturated steam corresponding to 1.8 bar pressure and 117°C is available for heating purpose. Latent heat of condensation of steam is 2212 kJ/kg. If the overall heat transfer coefficient for the system is 850 W/m^2 K, **[7]**

calculate:

i) Steam consumed and steam economy.

ii) Surface area of the evaporator.

OR

Q8) a) Discuss the following: **[6]**

i) Boiling point elevation

ii) Capacity and economy of evaporator

b) Explain in brief vapor recompression with a neat sketch **[6]**



Total No. of Questions : 8]

SEAT No. : ____

P3866

[Total No. of Pages : 2

[5869] - 404
S. E. (Chemical)
PRINCIPLES OF DESIGN
(2015 Pattern) (Semester - II) (New) (209349)

Time : 2 Hours] ***[Max. Marks : 50***

Instructions to the candidates: .

1) ***Answer Q.1 or Q.2, Q.3 or Q.4, Q.5 or Q.6, Q.7 or Q.8.***
2) ***Neat diagrams must be drawn wherever necessary.***
3) ***Figures to the right indicate full marks.***
4) ***Assume suitable data, if necessary.***
5) ***Use of calculator is allowed.***

Q1) a) Distinguish between codes and standards state the engineering aspects covered in standard specifications. **[6]**

b) Horizontal beam ABE is hinged at A and supported on rollers at B.span AB=5m and BE=2m. It carries point loads of 2400 N,3600 N and 1400N at C,D and E respectively. AC=1.5m, CD=2m, DB=1.5m. All the point loads act vertically. Calculate supports ions and draw S.F and B.M diagrams. **[6]**

OR

Q2) a) Derive a relation for the shear stress developed in a shaft when it is subjected to torsion. **[6]**

b) A steel rod of 30mm diameter, 280mm long is subjected to axial forces alternating between maximum compression of 15kN and a maximum tension of 5kN. Find the difference between the greatest and least lengths of the rod. E=210GPa. **[6]**

Q3) a) A shaft 80mm diameter transmits power at maximum shear stress of 63 MPa. Find the length of a 20mm wide key required to mount a pulley on the shaft so that the stress in the key does not exceed 42 MPa. **[7]**

b) How are ends of belts joined? For horizontal belts which side (tight or slack) of the belt should run on the top and why? **[6]**

OR

Q4) a) Discuss the function of coupling. Give at least three practical application. **[6]**

P.T.O.

b) A shaft rotating at a constant speed is subjected to variable load. The bearing support the shaft are subjected to stationary equivalent radial load of 3 kN for 10% of time, 0.2 kN for 20% of time, 1 kN for 30% of time and no load for ramaining time of cycle. If the total life expected for the bearing is 20×10^6 revolutions at 95% reliability. Calculate dynamic load rating of the ball bearing. **[7]**

Q5) a) A vessel having 1.6 m outside diameter is to operate at a pressure of 5 kg/cm^2. The permissible stress of the material used for fabrication 1020 kg/cm^2. Welded joint efficiency is 85%. Calculate the thickness required for a cylindrical vessel and a spherical vessel? Which vessel should be selected for operation? Design pressure = $5 \times 1.1 = 5.5$ Kg/cm^2 ? **[6]**

b) What are various types of welding joints used in pressure vessels? Discuss with neat sketch. **[6]**

OR

Q6) a) A thick walled high pressure vessel has 500 mm inside diameter. It is subjected to an internal pressure of 6000 bar, the yield strength of material is 5000 Kg/cm^2. Ultimate tensile strength of material is 6500 kg/cm^2. Calculate the thickness of Vessel according to the various theories of failure. Factor of safety is 1.4.

Also estimate the tangential stress and radial stress variation along the vessel wall. **[6]**

b) Explain with a neat sketch various types of flanged joints used in pressure vessels. **[6]**

Q7) a) A cylindrical pressure vessel 1.8m in diameter and 5m in height is subjected to an internal pressure of 8 kg/cm^2 corrosion allowance is 2mm. If the vessel is fabricated as: Class B vessel with J=0.85. **[7]**

b) With neat sketch explain stresses induced in thick vessel subjected to internal pressure. **[6]**

OR

Q8) a) The inside diameter of cylinder is 25 cm and is subjected to an internal pressure of 600Kg/cm^2. Allowable tensile stress of the material is 1400 kg/cm^2. What should be the minimum thickness of the vessel? **[7]**

b) Write short note on Autofrettaging of monoblock Pressure vessels. **[6]**

Total No. of Questions : 8]

SEAT No. :

P3867

[Total No. of Pages : 2

[5869] - 405
S. E. (Chemical)
CHEMICAL ENGINEERING THERMODYNAMICS - I
(2015 Pattern) (Semester - II) (209350)

Time : 2 Hours] ***[Max. Marks : 50***

Instructions to the candidates: .

1) ***Solve Q.1 or Q.2, Q.3 or Q.4, Q.5 or Q.6, Q.7 or Q.8.***
2) ***Neat diagram must be drawn wherever necessary.***
3) ***Figures to the right indicate full marks.***
4) ***Use of logarithmic tables, slide rule, Mollier charts, electronic pocket calculator and steam tabel is allowed.***
5) ***Assume suitable data, if necessary.***

Q1) a) An ideal gas undergoes the following sequence of mechanically reversible processes. **[8]**

i) From an initial state of 70°C and 1 bar, it is compressed adiabatically to 150°C.

ii) It is then cooled from 150°C to 70°C at constant pressure.

iii) Finally it is expanded isothermally to its original state.

Calculate W,Q, ΔU, ΔH for each process and for entire cycle [C_v=(3/2)R, C_p=(5/2)R]

b) Distinguish between State function, Path function. **[4]**

OR

Q2) a) Calculate the compressibility factor and molar volume for methanol vapors at 500K and 10 bar by using following equations, experimental values of virial coefficients are B= $-2.19\times10^{-4}M^3/mol$ C= $-1.73\times10^{-8}M^6/mol^2$. The critical temperature and pressure of methanol are 512.6K and 81 bar. **[8]**

i) Truncated from of virial equation

ii) Redlich Kwong equation

b) Explain P-V diagram for a pure substance showing all region. **[4]**

P.T.O.

Q3) a) Hydrocarbon oil (Cp = 2.5 kJ/kg K) is to be cooled from 425 K to 340 K at the rate of 5000 kg/h in a parallel flow heat exchanger. Cooling water (Cp = 4.2 kJ/kg K) at the rate of 10,000 kg/h at 295 K is available. **[8]**

i) Determine the total change in entropy. Is the process reversible?

ii) If a reversible Carnot engine is to be operated receiving the heat from the oil and rejecting the heat to the surrounding at 295 K how much work would be available.

b) Explain Standard heat of formation and Standard heat of combustion.**[4]**

OR

Q4) a) Explain effect of temperature on heat of reaction and derive necessary equation. **[8]**

b) Explain importance and limitations of second law of thermodynamics.**[4]**

Q5) a) Discuss Clausius-Clapeyron equation. **[7]**

b) What do you mean by residual properties. **[6]**

OR

Q6) Prove that **[13]**

a) $dS=C_p dT - (dV/dT)_p dP$

b) $dU=C_v dT+[\ T(dP/dT)_v - P\ ]dV$

Q7) a) What are general method available for gas liquefaction. **[6]**

b) A vapour compression refrigeration system with ammonia as the working fluid is to operate between 266K and 300K. Determine: **[7]**

i) COP, given that the enthalpy fo saturated vapour at 266K = 656 kJ/kg and enthalpy of superheated vapour leaving the compressor = 724 kJ/kg, enthalpy of saturated liquid at 300K = 144 kJ/kg.

ii) COP, if a temperature approach of 5 K is necessary in the evaporator and condenser and the efficiency of the compressor is 75%. Enthalpy of saturated vapour entering the condenser = 758 kJ/kg, enthalpy of saturated liquid at 305K = 159 kJ/kg.

OR

Q8) a) What are desirable properties of refrigerant. **[6]**

b) A vapour compression cycle using ammonia as refrigerant is employed in an ice manufacturing plant. Cooling water at 288K enters the condenser at a rate of 0.25 kg/sec and leaves at 300K. Ammonia at 294 K condenses at rate of 0.50 kg/minute. Enthalpy of liquid ammonia at 294 K is 281.5 kJ/kg. The compressor efficiency is 90%. Saturated ammonia vapour at 258K and the enthalpy of 1426 kJ/kg enters the compressor. What is the power requirement of the compressor and refrigeration capacity in tons? **[7]**

Total No. of Questions : 8]

SEAT No. : ____

P3868

[Total No. of Pages : 2

[5869]-406

S.E. (Civil Engineering)

ARCHITECTURAL PLANNING AND DESIGN OF BUILDINGS

(2015 Pattern) (Semester - II) (201005)

Time : 2 Hours] ***[Max. Marks :* 50**

Instructions to the candidates:

1) ***Attempt questions 1 or 2, 3 or 4, 5 or 6, 7 or 8.***
2) ***Figures to the right indicate full marks.***
3) ***Draw neat figures wherever necessary.***

Q1) a) Write a short note on TDR. Who is eligible for TDR and enlist the documents required for TDR? **[6]**

b) Explain the following principle of architectural planning with sketches: **[6]**

i) Unity

ii) Composition

OR

Q2) a) Enlist the documents to be submitted along with building plans. **[6]**

b) What is mean by earthquake resistant structures? Explain the necessity of earthquake resistance structure. **[6]**

Q3) a) Explain the role of Plan Sanctioning Authority for township. **[6]**

b) Explain different techniques of effective disaster management. **[6]**

OR

Q4) a) State the bye-laws regarding road width and height of building. **[6]**

b) Explain in short mechanical ventilation and its types. **[6]**

Q5) a) Design a primary school for 5 classrooms, the building is single storied and is RCC framed structure. the following units are to be provided: **[13]**

i) Number of students per classroom-40

ii) Primary class room-50 m^2

iii) Drawing room-75 m^2

iv) Headmasters room - 15m^2

P.T.O.

v) Administrative office-30m^2
vi) Common staff room - 60m^2
vii) Medical unit - 30m^2
viii) Book store-15m^2
ix) Sanitary block (Ladies and Gents) - suitable number

Draw to a scale 1 : 50 or suitable, line plan with North line.

OR

Q6) Draw to a scale of 1:50 a line plan of a hostel building with 100 bed capacity.Assume suitable unit for the same. Calculate the water requirement for the same. **[13]**

Q7) It is proposed to construct a flooring tile factory. Design the building and draw only Line plan considering all necessary units. The factory most consist of the following units: **[13]**

i) Administration and engineering staff unit
ii) Storage space for raw materials
iii) Production unit
iv) Storage space for finished products
v) Sanitary blocks etc.

Show north direction and mention scale.

OR

Q8) It is proposed to construct a PWD Executive Engineer's office with the following data: **[13]**

i) Entrance + Waiting – 12m^2
ii) Administrative office – 15m^2
iii) E.E. office (attached toilet) – 18m^2
iv) Technical session – 15m^2
v) Record room – 9m^2
vi) PA to Executive – 9m^2
vii) Sanitary block (Ladies and Gents) - suitable
viii) Passage–1.5 m wide

Draw to a scale of 1:50 or suitable.



Total No. of Questions : 8]

SEAT No. :

P3869

[Total No. of Pages : 3

[5869] - 407
S.E. (Civil)
FLUID MECHANICS - I
(2015 Pattern) (Semester - II) (201004)

Time : 2 Hours] *[Max. Marks : 50*

Instructions to the candidates:

1) ***Answer any four questions from Q.1 or Q.2, Q.3 or Q.4, Q.5 or Q.6, Q.7 or Q.8.***
2) ***Draw neat diagrams must be drawn whenever necessary.***
3) ***Assume suitable data, if necessary. Stataing it clearly.***
4) ***Figures to the right indicate full marks.***
5) ***Use of logarithmic table, slide, rule and electronic pocket calculator are allowed.***

Q1) a) Explain with reason, Viscosity of fluid decrease with temperature and that of gas increase with temperature. **[3]**

b) Find the volume in ml of blood collected from a freshly punctured finger. A capillary tube of 3mm diameter was used for collecting blood. The following values may be taken, density of blood 1056kg/m^3, surface tension of blood 5×10^{-2}N/m and contact angle zero. **[4]**

c) Derive the condition for

i) Reynold Number

ii) Euler Number

iii) Weber Number **[3]**

OR

Q2) a) Dervie the condition for the difference in pressure measured using inverted U tube manometer. Also discuss on the nature of the manometric fluid used in this case. **[4]**

b) Differentiate between

i) Metacentre and center of buoyancy

ii) Pressure at a point and Total pressure **[2]**

c) A vertical gate is 1.5m wide and 2m high. Water stands to the total height of gate on one sideand on other side of gate to an height 1m below top. Find the horizontal force to be applied at the top to open the gate. **[4]**

P.T.O.

Q3) a) A horizontal pipe of diameter 100mm carrying water suddenly increases its diameter to 200mm. The pipe carries a discharge of 200 liters/s. The pressure intensity in smaller pipe is 11.72 N/cm^2,

i) Loss of head due to sudden increase in diameter,

ii) Pressure in the pipe of larger diameter

iii) Draw the hydraulic gradient line and total energy line in the above case **[5]**

b) Derive the continuity equation for three dimensional flow. **[5]**

OR

Q4) a) For the following, explain how flow can be described

i) $\psi = -12y$

ii) $\psi = 3x$

iii) $\psi = 5x - 7y$ **[5]**

b) Define coefficient of velocity, coefficient of contraction and coefficient of discharge. Find out the relation among the three. **[5]**

Q5) a) Prove that the ratio of maximum velocity to average velocity for a laminar flow between two stationary parallel plate is 1.5 **[6]**

b) Oil of specific gravity 0.60 and viscosity 3.0 Poise is flowing through a 30cm diameter pipe kept horizontally. The length of pipe is 2500m and the head loss is 20 m. If the flow is laminar, estimate

i) Shear stress at the pipe wall

ii) Shear stress at a radial distance of 10 cm from the pipe axis and

iii) The friction factor **[6]**

c) Explain any one method for measuring viscosity of fluid. **[3]**

OR

Q6) a) Explain the role of viscosity in development of boundary layer and development of Boundary layer thickness. **[4]**

b) A 1.5m wide and 4.5m long plate is moving in air with a velocity of 2m/s. Determine the drag force on plate assuming

i) Laminar boundary layer for full length &

ii) Turbulent boundary layer for full length. Take density of air 1.25kg/m^3, viscosity 1.8 × 10^{-4} poise. **[6]**

c) What is laminar sub layer and explain its utility in classification pipe boundary? **[5]**

Q7) a) Differentiate between laminar and turbulent flow and what are the characteristics of turbulent flow. Explain the Prandtl mixing length theory. **[6]**

b) Explain Nikuradse's experiment on artificilly roughened pipe and development of Moody diagram. What information can be obtained from it. **[6]**

c) Explain the reason for major loss and minor loss in flow through pipe and the necessity for evaluating the magnitude of these loss. **[3]**

OR

Q8) a) Derive the Darcy Weisbach equation for major loss in pipe. **[5]**

b) A compound pipe connecting 2 reservior consists of a pipe of diameter d_1 and length L_1 connects another pipe of diameter d_2 and lenght L_2 where d1 is greater than d_2. Find the total head causing flow. Draw the, hydraulic gradient line and total energy line so formed. **[5]**

c) A compound pipe connects 2reservior at different elevation. The upper reservoir is connected to a pipe of length 450m and diameter 20cm, the second pipe of length 500m and diameter 15cm connects lower reservoir. If the friction factor for both the pipes are 0.02 and velocity in second pipe is 1.20m/s What is the difference in water level between the 2 reservoir. Find also the equivalent diameter pipe so as to replace the compound pipe for the same discharge. **[5]**



Total No. of Questions : 8]

SEAT No. : ____

P3870

[Total No. of Pages : 5

[5869]-408
S.E. (Civil)
STRUCTURAL ANALYSIS-I
(2015 Pattern) (Semester-II) (201008)

Time : 2 Hours] ***[Max. Marks : 50***

Instructions to the candidates:

1) ***Answer Q.1 or Q.2, Q 3 or Q.4, Q 5 or Q.6, Q7 or Q.8.***
2) ***Neat diagrams must be drawn wherever necessary.***
3) ***Figures to the right indicate full marks.***
4) ***Assume suitable data, if necessary.***
5) ***Use of electronic pocket calculator is allowed.***

Q1) a) A simply supported beam AB having span 4m is loaded and supported as shown in figure 1. Determine the deflection at C using Macaulay's method. EI = constant. **[6]**

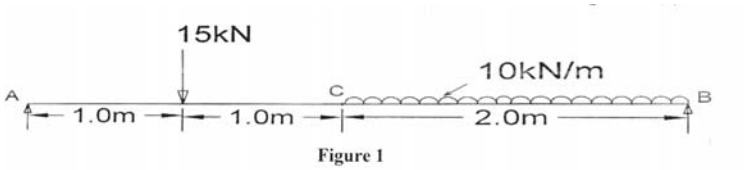

Figure 1

b) Determine deflection at free end of cantilever beam as shown in figure 2. By moment area method. **[6]**

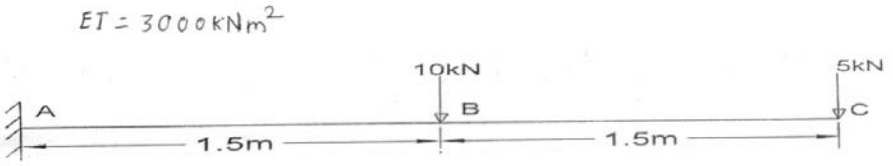

Figure 2

OR

Q2) a) Determine moment at B for the continuous beam loaded and supported as shown in figure 3. By Clapeyron's theorem. Draw BM.D. **[6]**

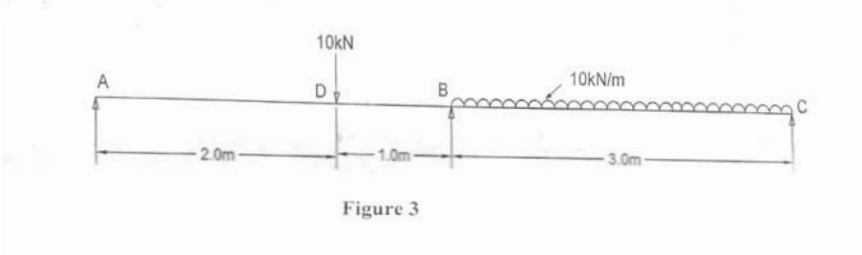

Figure 3

P.T.O.

b) Explain static and kinematic indeterminacy with suitable examples. **[6]**

Q3) a) Determine the vertical deflection at the D in the frame shown in figure 4. Assume constant EI. Use Castigliano's method. **[6]**

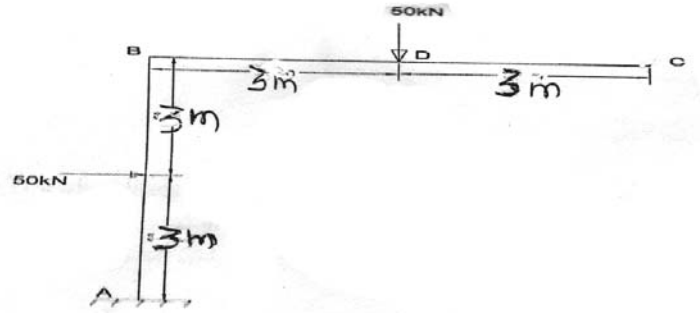

Figure 4

b) Analyze the truss shown in figure 5. Use Castigliano's theorem. EA = constant. **[6]**

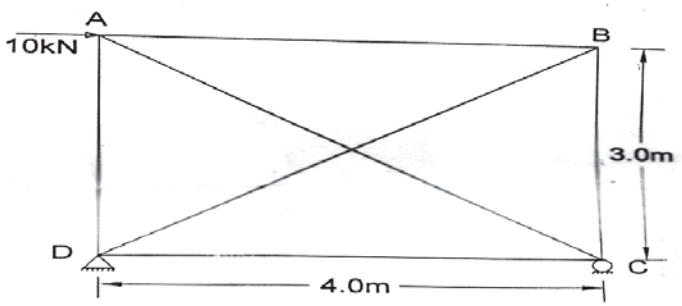

Figure 5

OR

Q4) a) Draw influence line diagram for shear force and bending at section C for a cantilever beam of span L as shown in figure. **[6]**

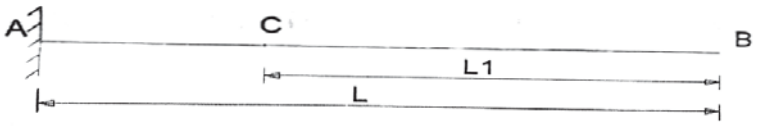

Figure 6

b) Two wheel loads 80 kN and 200 kN spaced 2m apart move on a girder of span 16 m. find the maximum positive and maximum negative shear force at a section 4 m from the left end. Any wheel load can lead the other. **[6]**

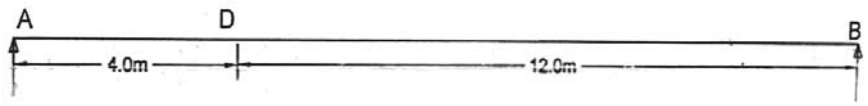

Figure 7

Q5) A three hinged parabolic arch AB is hinged at supports A and B which are below the crown hinge C by 3.5 m and 7m respectively. The span of arch is 24m. The arch carries uniformly distributed load of 35 kN/m from A to C. Find the reactions at the supports. **[13]**

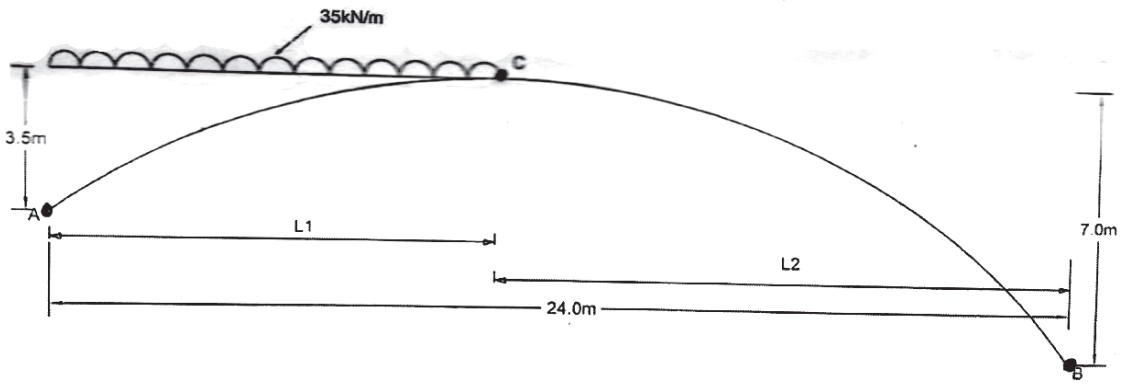

Figure 8

OR

Q6) A Three hinged parabolic arch of 24 m span and 5 m central rise subjected to uniformly distributed load on half portion of intensity 20 kN/m. Calculate normal thrust and radial shear for 5m from left end. Also, calculate maximum positive bending moment. **[13]**

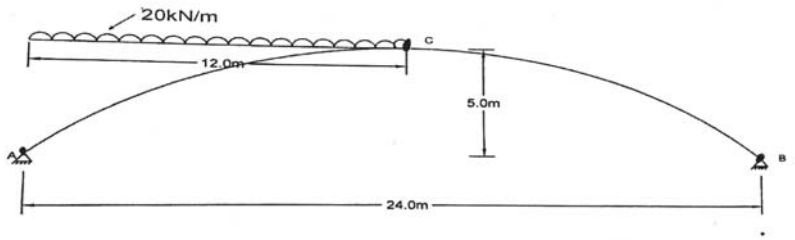

Figure 9

Q7) a) For the beam section shown in figure. Determine the shape factor. **[7]**

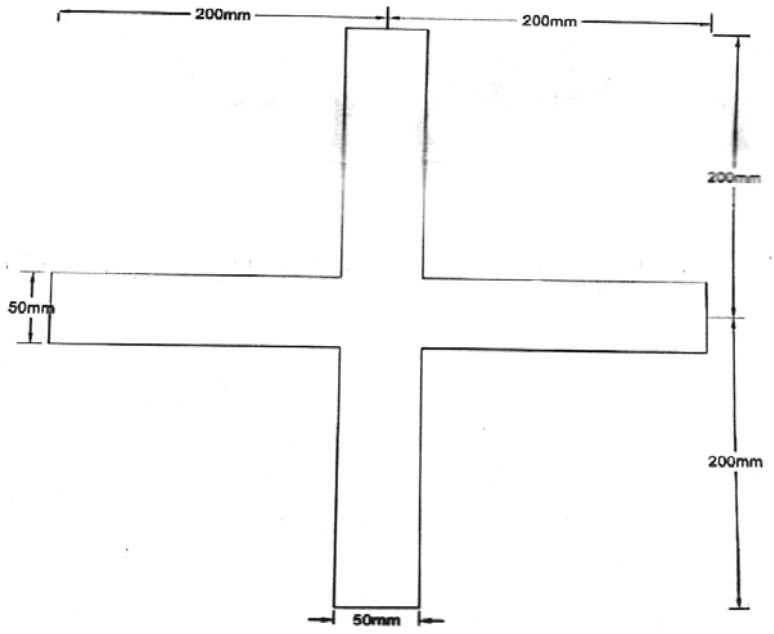

Figure 10

b) Explain **[6]**

i) Plastic Moment

ii) Plastic Collapse

iii) Shape Factor

OR

Q8) a) i) Define shape factor. **[6]**

ii) Find the value of collapse load W for the continuous beam shown in figure.

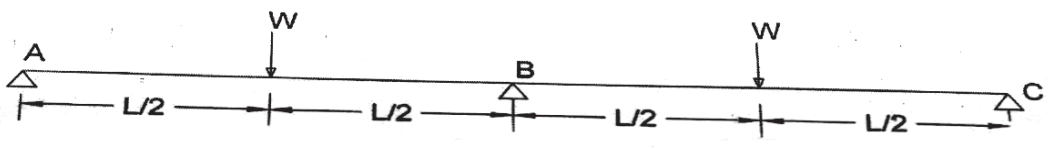

Figure 11

b) For the portal frame shown in figure. Draw different poossible collapse mechanisms. **[7]**

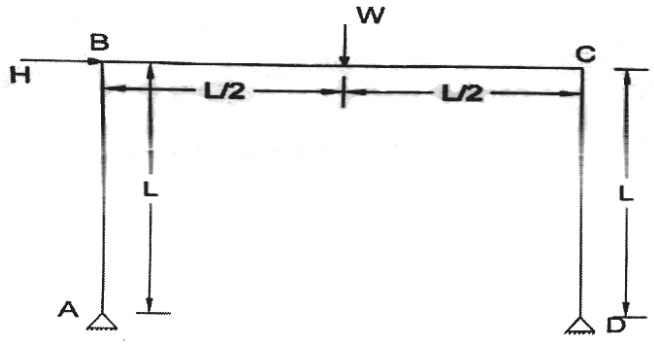

Figure 12

Total No. of Questions : 8]

SEAT No. :

P3871

[Total No. of Pages : 4

[5869] - 409
S.E. (Civil Engineering)
CONCRETE TECHNOLOGY
(2015 Pattern) (Semester - II) (201007)

Time : 2 Hours] *[Max. Marks : 50*

Instructions to the candidates:

1) ***Answer Q.1 or Q.2, Q.3 or Q.4, Q.5 or Q.6, Q.7 or Q.8.***
2) ***Neat diagrams must be drawn wherever necessary.***
3) ***Figures to the right indicate full marks.***
4) ***Your answers will be valued as a whole.***
5) ***Use of electronic pocket calcuator is allowed.***
6) ***Assume suitable data, if necessary.***
7) ***Use of IS code 10262, 456 is not allowed.***

Q1) a) Write a short note on chemical composition of cement. **[6]**

b) Define workability. What are the different methods to measure workability? Explain any one in detail. **[6]**

OR

Q2) a) Explain alkali aggregate reaction. State factors promoting it & controlling the reaction. **[6]**

b) State & explain various operations involved during the concreting from mixing to finishing of concrete surface. **[6]**

Q3) a) State the various types of non-destructive tests carried on hardened concrete. Explain Ultrasonic pluse velocity test in detail. **[6]**

b) Enlist the types of vibrators used for compaction of concrete. Explain any one in detail. **[6]**

OR

Q4) a) Explain the compressive strength of concrete. How it is determined in laboratory? **[6]**

b) Write a short note on: **[6]**

i) Cellular light weight concrete

ii) Ferrocement

P.T.O.

Q5) Using Indian Standard recommended guidelines, design a concrete mix for a reinforced concrete structure to be subjected to the severe exposure conditions for the following requirements: **[13]**

a) Stipulations for proportioning

i) Grade designation: M30,

ii) Standard deviation, s = 5

iii) Type of cement: OPC 53 grade conforming to IS 8112

iv) Workability: 100mm(slump)

v) Degree of supervision: Good

vi) Type of aggregate: Angular coarse 20mm aggregate,

vii) Maximum cement content:450 kg/m^3

viii) Chemical admixture type: 2% Superplasticizer conformingto IS 9103

b) Test data for materials

i) Specific gravity of cement: 3.15

ii) Specific gravity of admixture: 1.145

iii) Specific gravity of

1) Coarse aggregate - 2.74

2) Fine aggregate - 2.74

iv) Water absorption

1) Coarse aggregates - 0.5%

2) Fine aggregates – 1.00%

v) Free surface moisture

1) Coarse aggregates – Nil(absorbed moisture also nil)

2) Fine aggregates – Nil

vi) Sieve analysis

1) Coarse aggregate:

IS Sieve Sizes (mm)	Analysis of Coarse Aggregate Fraction		Percentage of different Fractions			Remarks
	I	II	I(60%)	II(40%)	Combined (100%)	
20	100	100	60	40	100	Confirming
10	0	71.2	0	28.5	28.5	of Table 2
4.75		9.40		3.7	3.7	of IS 383
2.36		0				

2) Fine aggregate: Conforming to grading zone I

c) Design considerations:

Table 1: from IS 10262; Maximum water content per cubic meter of concrete.

Sr.No.	Nominal Maximum Size of Aggregate (mm)	Maximum Water Content (kg)
i)	10	208
ii)	20	186
iii)	40	165

Table 2 : From IS 10262;Volume of Coarse Aggregate per Unit Volume of Total Aggregate

Sr. No.	Nominal Maximum Size of Aggregate (mm)	Volume of Coarse Aggregate per Unit Volume of Total Aggregate for Different Zones of Fine Aggregate			
		Zone IV	Zone III	Zone II	Zone I
i)	10	0.50	0.48	0.46	0.44
ii)	20	0.66	0.64	0.62	0.60
iii)	40	0.75	0.73	0.71	0.69

Table3: From IS 456, Different Exposure Conditions for reinforced concrete

Sr. No.	Exposure	Minimum cement content (Kg/m^3)	Maximum free water cement ratio	Minimum grade of concrete
i)	Mild	300	0.55	M20
ii)	Moderate	300	0.50	M25
iii)	Severe	320	0.45	M30
iv)	Very Severe	340	0.45	M35
v)	Extreme	360	0.40	M40

OR

Q6) a) What do you mean by concrete mix design? What are various factors affecting concrete mix design? **[7]**

b) What do you mean by nominal mix, standard mix and design mix? **[6]**

Q7) a) Explain in detail corrosion monitoring techniques of reinforcement and its preventive measures. **[5]**

b) Write a note on: **[8]**

i) Retrofitting by FRP

ii) Attack by Seawater

OR

Q8) a) Explain process of preparation of surface for repairs along with its importance. **[5]**

b) State and explain factors affecting the Permeability of concrete. What measures should be taken to reduce permeability of concrete? **[8]**



Total No. of Questions : 8]

SEAT No. :

P4569

[Total No. of Pages : 2

[5869]-410
S.E. (Civil)
ENGINEERING GEOLOGY
(2015 Pattern) (207009) (Semester - II)

Time : 2 Hours] *[Max. Marks : 50*

Instructions to the candidates:

1) ***All questions are compulsory.***
2) ***Figures to the right indicate full marks.***
3) ***Neat diagrams should be drawn wherever necessary.***

Q1) a) What are extrusive and instrusive Igneous bodies? Describe various **DISCORDANT** igneous intrusive bodies with neat diagrams. **[6]**

b) Discuss in detail the significance of foliations of metamorphic rocks on Civil projects. **[6]**

OR

Q2) a) Write in brief **INTERIOR OF EARTH**. **[6]**

b) What is meant by Metamorphism? Explain GNEISSOSE and SCHISTOSE structure with neat diagram. **[6]**

Q3) a) Describe Physiographic divisions of India with their engineering significance. **[6]**

b) Explain various features developed due to river erosion. **[6]**

OR

Q4) a) What is Remote sensing? Explain uses of remote sensing Civil Engineering. **[6]**

b) Explain in detail Surface Geological Investigations. **[6]**

P.T.O.

Q5) a) What are the geological requirements for the foundation of Bridge? **[6]**

b) Discuss in detail with a case history how geological investigations have helped for proper site of Dam. **[7]**

OR

Q6) a) What is ARTESIAN condition? Explain any three geological conditions leading to artesian well. **[6]**

b) A site is proposed for excavation of tunnel is A-B and M-N. Which is passing through axis and limb region of fold respectively. Justify the suitability of tunnel is such conditions. **[7]**

Q7) a) What difficulties you may face while tunneling through. **[7]**

i) Axial portion of Syncline

ii) Dyke crossing the alignment.

b) Discuss feasibility of DAM in folded areas. Draw neat diagrams. **[6]**

OR

Q8) a) What observations and precautions are necessary during Core Drilling for Preliminary Geological Exploration? **[7]**

b) What is LANDSLIDE? What are the causes of it? **[6]**

❄ ❄ ❄

Total No. of Questions : 08]

SEAT No. : ____

P3872

[Total No. of Pages : 5

[5869]-411
S.E. (Civil Engineering)
ENGINEERING MATHEMATICS -III
(2015 Pattern) (Semester-I) (207001)

Time : 2 Hours] ***[Max. Marks : 50***

Instructions to the candidates:

1) ***Neat diagrams must be drawn wherver necessary.***
2) ***Assume suitable data, if necessary.***
3) ***Use of Nonprogrammable calculator is allowed.***
4) ***Attempt Q.No 1 or Q. No 2, Q No. 3 or Q.No.4 Q.No.5 or Q.No.6 Q.No.7 or Q. No.8.***

Q1) a) Solve any two of the following. **[8]**

i) $(D^2 + 2D + 1)y = xe^{-x}\sin x$

ii) $\frac{d^2y}{dx^2} - 6\frac{dy}{dx} + 9y = x^{-2}e^{3x}$ (by variation of parameters)

iii) $x^3\frac{d^3y}{dx^3} + 2x^2\frac{d^2y}{dx^2} + 2y = 10\left(x + \frac{1}{x}\right)$

b) Solve the following system of equations by using Gauss elimination method. **[4]**

$$10x + 2y + z = 9$$
$$2x + 20y - 2z = -44$$
$$-2x + 3y + 10z = 22$$

OR

P.T.O.

Q2) a) The differential equation satisfied by a beam, uniformly loaded with one end fixed and second subjected to a tensile force P is given by: **[4]**

$$EI\frac{d^2y}{dx^2} - Py = -\frac{W}{2}x^2$$

Show that the elastic curve for the beam under conditions $y = 0, \frac{dy}{dx} = 0,$ When $x = 0$, is given by.

$$y = \frac{W}{2P}\left[x^2 + \frac{2}{n^2} - \frac{e^{nx}}{n^2} - \frac{e^{-nx}}{n^2}\right]$$

Where $EI=P/n^2$.

b) Use Euler's method to solve the equation $\frac{dy}{dx} = 1 + xy$ subject to the conditions: at $x = 0, y = 1$ and tabulate y for $x = 0\ (0.1)\ 0.5$. **[4]**

c) Solve the following system of equations by Cholesky's method: **[4]**

$$4x_1 + 2x_2 + 14x_3 = 14$$
$$2x_1 + 17x_2 - 5x_3 = -101$$
$$14x_1 - 5x_2 + 83x_3 = 155$$

Q3) a) the first four moments of a distribution about the value 5 are 2,20, 40 and 50 obtain the first four central moments, mean, standard deviation and β_1, β_2. **[4]**

b) In a male population of 1000, the mean height is 68.16 inches and standard deviation is 3.2 inches. How many men will be expected to be more than 72 inches of height if the data is normally distributed (z =1.2, area = 0.3849). **[4]**

c) Find the directional derivative of $\phi = 3 \log (x + 4 + z)$ at (1,1,1) in the direction of the tangent to the curve $x = b \sin t,\ y = b \cos t, z = bt$ at $t = 0$. **[4]**

OR

Q4) a) Prove the following (any one) **[4]**

i) $\nabla\left[r\nabla\left(\frac{1}{r^3}\right)\right]=\frac{3}{r^4}$ ii) $\nabla^4[\log r]=\frac{2}{r^4}$

b) Find constants a,b,c so that **[4]**

$\bar{F}=(x+2y+az)\bar{i}+(bx-3y-z)\bar{j}+(4x+cy+2z)\bar{k}$ is irrotational. Also find ϕ so that $\bar{F}=\nabla\phi$

c) Obtain regression lines for following data. **[4]**

x	2	3	5	7	9	10
y	2	5	8	10	12	14

Q5) Solve any two.

a) If $\bar{F}=3xyi-y^2j$ Evaluate $\int_C \bar{F}.d\bar{r}$ where C is the arc of the parabola $y=2x^2$ from (0,0) to (1,2). **[6]**

b) Evaluate $\int_C \bar{F}.d\bar{r}$ by stoke's theorem, where $\bar{F}=y^2i+x^2j-(x+z)k$ and C is the boundary of the triangle with vertices at (0,0,0) (1,0,0) and (1,1,0) **[7]**

c) Use Divergence theorem to show that $\iint_S(\nabla r^2).\overline{dS}=6V$ where S is any closed surface enclosing volume V. **[6]**

OR

Q6) Solve Any two.

a) Compute the workdone by the force **[6]**

$\bar{F}=(2y+3)i+xzj+(yz-x)k$ when particle moves from the point (0,0,0) to (2,1,1) along the curve $x=2t^2$, $y=t$, $z=t^3$.

b) Using Stoke's theorem to Evaluate $\int_C \bar{F}.\overline{dr}$ where $\bar{F}= (x^2 + y^2)i - 2xyj$ &

C in the boundary of rectangle bounded by $x = \pm a, \quad y = 0, \; y = b$ **[7]**

c) Prove that $\iint_S (f\ \nabla g - g\ \nabla f).\overline{ds} = \iiint_V (f\ \nabla^2 g - g\ \nabla^2 f)dV$ where f and g are scalar point functions. **[6]**

Q7) Solve any two of the following.

a) An elastic string is streched between two points at a distance *l* apart one end is taken as origin and point $x = \frac{3l}{4}$ is displaced through distance d perpendicular to *x* - a*x*is and released from rest from this position obtain the displacement. **[7]**

b) Solve $\frac{\partial \mu}{\partial t} = k\frac{\partial^2 \mu}{\partial^2 x}$ for the conduction of heat along a rod without radiation subject to the following conditions.

i) u is finite as $t \to \infty$

ii) $\frac{\partial \mu}{\partial x} = 0$ for $x = 0, x = l$

iii) $u = lx - x^2$ for $t = 0$ between $x = 0$, $x = l$ **[6]**

c) A rectangular plate with insulated surface is 10 cm wide and so long to its width that it may be considered infinite in length without introducing an appreciable error if the temperature of the short edge y = 0 is given by

$u = 20x$ for $o \le x \le 5$

$= 20\ (10 - x)$ for $5 \le x \le 10$

and the two long edges $x = 0$, $x = 10$ as well as the other short edge are kept at 0°C. **[6]**

OR

Q8) Solve any two of the following.

a) A string is streched and fastened to two points distance l apart is displaced into the form $u(x,0) = a \sin \frac{\pi x}{l}$ from which it is released at time t = 0 Find the displacement of a string at a distance x from one end. **[7]**

b) Solve the equlation $\frac{\partial \mu}{\partial t} = a^2 \frac{\partial^2 \mu}{\partial x^2}$ where u (x,t) satisfies the following conditions. **[6]**

i) u (0, t) = 0

ii) u (l, t) = 0 for all t

iii) u (x, 0) = x in $0 < x < l$

iv) u (x, ∞) is finite

c) An infinitely long uniform metal plate is enclosed between lines y = 0 and y = l for $x > 0$. The temperature is zero along the edges y = 0, y = l and at infinity. If the edge $x = 0$ is kept at a constant temperature μ_0 find the temperature distribution u(x,y). **[6]**



Total No. of Questions : 8]

SEAT No. : ____

P3873

[Total No. of Pages : 2

[5869]-412

S.E. (Civil)

BUILDING TECHNOLOGY AND MATERIALS

(2015 Pattern) (Semester - I) (201001)

Time : 2 Hours] ***[Max. Marks : 50***

Instructions to the candidates:

1) ***All questions are compulsory.***
2) ***Figures to the right indicate full marks.***

Q1) a) List out any four types of buildings as per National Building Code. Describe Group - D Building. **[6]**

b) Write short notes on: **[6]**

i) Partition Walls

ii) Slip formwork

OR

Q2) a) Write short notes on: **[6]**

i) English Bond

ii) Mat foundation

b) Draw the sketch of formwork for Beam and Slab. Show all formwork parts clearly. **[6]**

Q3) a) Enlist any four types of flooring. Explain with sketch Timber flooring. **[6]**

b) Write short notes on: **[6]**

i) Lintel and Chajja

ii) Sky-light Window

OR

P.T.O.

Q4) a) Draw the sketch of sloping roof and show on it: **[6]**

i) Tie Beam

ii) Common Rafters

iii) Ridge cover

iv) Eaves Board

b) Define Arch. State different types of Archs. Explain any one in details. **[6]**

Q5) a) Plan a dogged stair for a residential building with the following details. **[7]**

i) F/F Height = 3.60 m

ii) The stair Hall Measures –2.50 m × 5.00 m

b) Define pointing. State types of pointing and explain any one in detail. **[6]**

OR

Q6) a) State various means of vertical circulation. Explain Escalators in detail. **[6]**

b) State the significance of protective coatings. Explain plastering to new wall. **[7]**

Q7) a) Enlist Engineering properties of: **[6]**

i) Aluminium

ii) Glass

iii) Timber

b) State safety precautions to be taken for Demolition of building. **[7]**

OR

Q8) a) Write short notes on: **[6]**

i) Glass cladding

ii) Thatch covering

b) Explain in detail storage of materials at site. **[7]**



Total No. of Questions : 8]

SEAT No. : ____

P3874

[Total No. of Pages : 3

[5869]-413

S.E. (Civil)

STRENGTH OF MATERIALS

(2015 Pattern) (Semester - I) (201002)

Time : 2 Hours] ***[Max. Marks : 50***

Instructions to the candidates:

1) ***Answer Q. No.1 or Q. No.2, Q. No.3 or Q. No.4, Q. No.5 or Q. No.6, Q. No.7 or Q. No.8.***
2) ***Figures to the right indicate full marks.***
3) ***Use of electronic pocket calculator is allowed.***
4) ***Neat diagrams must be drawn wherever necessary.***
5) ***Assume suitable data, if required.***

Q1) a) A steel bar of variable section is subjected to forces as shown in figure 1. Taking EI = 205GPa, determine the total elongation. **[6]**

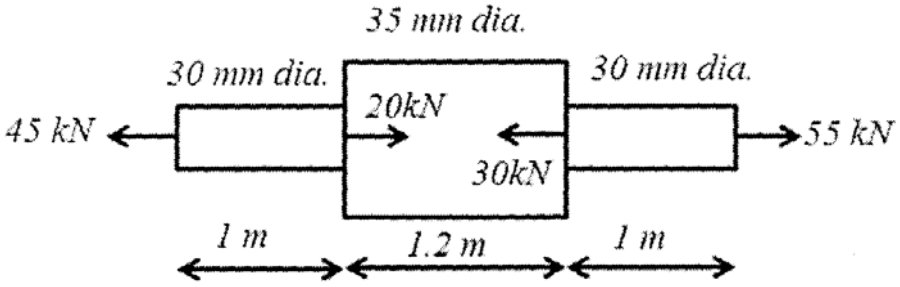

b) A laminated wooden beam 120mm wide and 180mm deep is made of three l20mm×60mm planks glued together to resist longitudinal shear. The beam is simply supported over a span of 2.5m. If the allowable shearing stress in the glued joint is 0.5 MPa. Find the safe udl the beam can carry. **[6]**

OR

Q2) a) Determine the values of stress in portion AB and BC of the steel bar shown in figure 2. When the temperature of the bar is –45°C, knowing that a close fit exists at both the rigid supports, when the temperature is +24°C. Take E = 200GPa and $\alpha = 11.7 \times 10–6/°C$ for steel. **[6]**

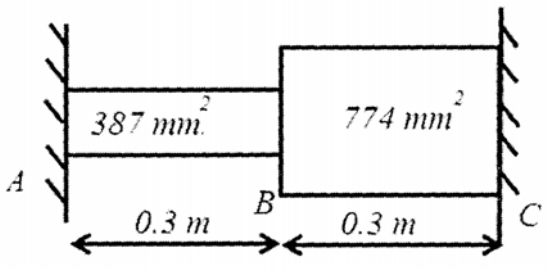

P.T.O.

b) i) What are the assumptions in the theory of pure bending? **[4]**

ii) A steel wire of 10mm diameter is bent into a circular arc of 20m radius. Determine the maximum stress induced in it. Take Young's modulus for steel as 200GPa. **[2]**

Q3) a) A hollow circular shaft of 6m length and inner and outer diameters of 75mm and 100mm is subjected to torque of l0kN-m. If G=80 GPa, determine the maximum shear stress produced and the total angle of twist. **[6]**

b) A plane element in a body is subjected to a tensile stress of 100MPa accompanied by shear stress of 25MPa. Find: **[6]**

i) Normal and shear stress on a plane inclined at 20° with tensile stress.

ii) The maximum shear stress on the plane.

OR

Q4) a) A steel rod, 40mm diameter and 5m in length is suddenly subjected to an axial pull of 50kN. Determine (a) The work done and (b) Maximum and instantaneous elongation. Take E=200GPa. **[6]**

b) A solid shaft 100mm in diameter is subjected simultaneously to an axial compressive force of 600kN and to the torque that twist the shaft through an angle of 1.5° in a length of 8m. If modulus of rigidity G=80Gpa. Determine the principal stress and maximum shear stress in the shaft.**[6]**

Q5) a) A simply supported beam loaded and supported as shown in figure 3. Plot SFD and BMD for the beam. **[6]**

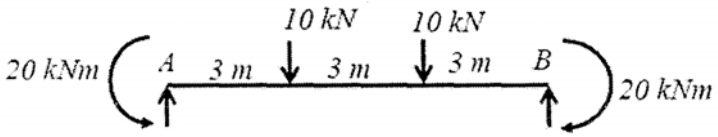

b) The BMD of a beam of span 12m is as shown in figure 4. Construct loading diagram from BMD. **[7]**

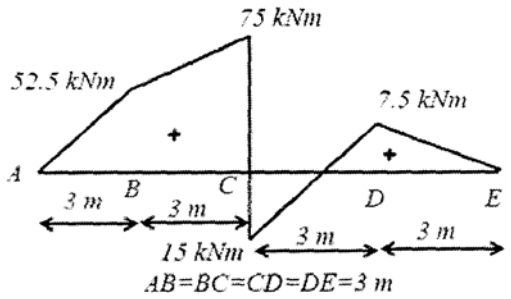

OR

Q6) a) Draw SFD and BMD for a beam shown in figure 5. **[6]**

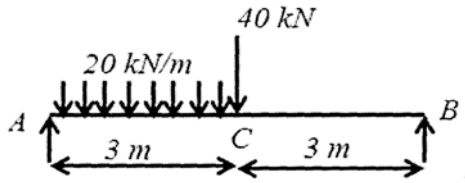

b) A simply supported beam 8m long carries three point loads at 100kN, l50kN and 200kN at 2m, 5m and 7m from left roller support. The self-weight of the beam is 25kN/m. The right end support is hinged. Draw S.F. and B.M. diagram for the beam. **[7]**

Q7) a) If the limit of proportionality of steel is 250MPa and modulus of elasticity 200GPa. Determine the slenderness ratio at which the Euler's formula for a fixed ended column can be used. **[6]**

b) A rectangular strut 150mm × 120mm thick. It carries a load of 180kN at an eccentricity of 10mm in a plane bisecting the thickness. Find the maximum and minimum intensity of stress in the section. Also find permissible eccentricity for no tension condition. **[7]**

OR

Q8) a) Calculate the critical load for a strut which is made up of a bar circular in section, 1.2 long and which is hinged at one end and fixed at the other end. The same bar when freely supported at it's ends gives the central deflection of 3mm, when a load of 100N is placed at it's centre. Also find the safe load taking factor of safety equal to 3. **[7]**

b) Explain core of a section. Hence obtain core of section for rectangular column of size 120mm × 120mm. **[6]**

Total No. of Questions : 8]

SEAT No. : ____

P3875

[Total No. of Pages : 3

[5869]-414

S.E. (Civil)

SURVEYING

(2015 Pattern) (Semester - I) (201006)

Time : 2 Hours] ***[Max. Marks : 50***

Instructions to the candidates:

1) ***Answer Q. No.1 or Q. No.2, Q. No.3 or Q. No.4, Q. No.5 or Q. No.6, Q. No.7 or Q. No.8.***
2) ***Neat sketches must be drawn wherever necessary.***
3) ***Figures to the right indicate full marks.***
4) ***Assume suitable data, if necessary.***
5) ***Use of electronic pocket calculator is allowed.***
6) ***Use of cell phone is prohibited in examination hall.***

Q1) a) Explain the following terms with its type: **[6]**

i) Meridian

ii) Bearing

b) Following notes refer to reciprocal levels taken with one level - **[6]**

Instrument station	Staff readings on		Remark
	A	B	
A	1.425	2.725	Distance AB = 1150 m
B	1.430	2.505	R.L. of A = 100 m
			Collimation Error = 0.003/150 m

Find: i) True R.L. of point B,

ii) Correction for collimation,

iii) Correction for refraction,

iv) Combined correction for curvature and refraction.

OR

P.T.O.

Q2) a) State uses and characteristics of contour lines. **[6]**

b) Give the corrected bearing of the following traverse taken from compass survey. **[6]**

Line	Fore Bearing	Back Bearing
AB	191°30’	13°00’
BC	69°30’	246°30’
CD	32°15’	210°30’
DE	262°45’	80°45’
EA	230°15’	53°00’

Q3) a) An incomplete traverse table is obtained as follows: **[6]**

Line	Length (M)	Bearing
AB	100.00	?
BC	80.50	140°30’
CD	60.00	220°30’
DA	?	310°15’

Calculate length of DA and bearing of AB.

b) Explain theory of stadia tacheometry. **[6]**

OR

Q4) a) Explain in detail procedure of measurement of horizontal angle by repetition method using 20” vernier transit theodolite. **[6]**

b) The following observations were made using a tacheometer fitted with an anallatic lens, multiplying constant being 100. **[6]**

Instr^{n}. Station	Instr^{n}. Height	Staff Station	W.C.B.	Vertical Angle	Hair Reading	Remark
O	1.550	A	30°30’	+4°30’	1.155,1.755,2.355	RL of O
		B	75°30’	+10°15’	1.250,2.000, 2.750	= 150 m.

Find R.L. of point A and B also find distance AB.

Q5) a) Draw a neat sketch of curve and write equation for the following in terms of radius of curve (R) and deflection angle (ϕ). **[6]**

i) Long Chord

ii) Versed sine

iii) Apex distance

b) Two straight road intersects at a chainage of 2550.50 m. The angle of intersection being 110°. Taking chord length of 30 m, calculate - **[7]**

i) Radius of curve

ii) Length of curve

iii) Tangent length

iv) Length of long chord

v) Chainage at starting point (T_1) and end point (T_2) of Curve

OR

Q6) a) State various obstacles in setting out curves. Explain the procedure of setting out simple curve when point of intersection is inaccessible. **[6]**

b) Two straights PI and QI meet at chainage of 3450 m. A right handed simple circular curve of 250 m radius joins them. The deflection angle between two straights is 50°. Tabulate the necessary data to layout the curve by Rankine's method of deflection angle. Take chord interval as 20 m. **[7]**

Q7) a) State segments and uses of Space Based Positioning System (SBPS). **[6]**

b) Explain the procedure of establishing horizontal control for setting of a tunnel. **[7]**

OR

Q8) a) Describe the procedure of setting out drainage line. **[6]**

b) Explain in brief procedure of setting out of a building on ground. **[7]**



Total No. of Questions : 8]

SEAT No. : ____

P3876

[Total No. of Pages : 2

[5869]-415

S.E. (Civil)

GEOTECHNICAL ENGINEERING

(2015 Pattern) (Semester - I) (201003)

Time : 2 Hours] ***[Max. Marks : 50***

Instructions to the candidates:

1) ***Answer Q.1 or Q.2, Q.3 or Q.4, Q.5 or Q.6, Q.7 or Q.8.***
2) ***Figures to the right indicate full marks.***
3) ***Assume suitable data, if necessary.***
4) ***Use of calculator is allowed in the examination.***
5) ***Neat diagrams must be drawn wherever necessary.***

Q1) a) A sand sample has a porosity of 30% and specific gravity of solids as 2.7. Calculate, **[6]**

i) Dry unit weight of sand.

ii) Unit weight of sand if degree of saturation is 0.56.

iii) Degree of saturation at water content of 4%.

iv) Unit weight of submerged sand when n is 0.30.

b) Explain with neat sketch variable head permeability test. Derive the expression for coefficient of permeability of soil for the variable head method. **[6]**

OR

Q2) a) To find out coefficient of permeability of clay the permeability test was carried out in a variable head permeameter having the diameter of the sample container to be 100 mm. The initial head of water in the stand pipe was found to be 450 mm and it was observed to drop 300 mm in 3 minutes 15 seconds. If the sample be 150 mm high and the diameter of the stand pipe be 19 mm, determine the coefficient of permeability of the clay in meter per day. **[6]**

b) Derive the relation between γd, G and e. **[6]**

P.T.O.

Q3) a) A cohesive soil has an angle of shearing of 15° and cohesion of 35 KN/m^2. If the specimen of soil is subjected to a triaxial compression test, find the value of the lateral pressure in the cell for failure to occur at total stress of 300 KN/m^2. **[6]**

b) What is significant depth and pressure bulb? Explain with neat sketch. **[6]**

OR

Q4) a) A water tower is supported only on three pillars forming an equilateral triangle with 10 m side. The total weight of tower is 1200 KN. Calculate vertical stress 10 m below the ground level under any one of the pillar. **[6]**

b) Explain the procedure for unconfined compression test with neat sketches. **[6]**

Q5) a) Explain step by step procedure for determination of lateral earth pressure graphically by Rebhann's method with neat sketch. **[6]**

b) Determine the active resultant thrust at a depth of 7 m in sand whose angle of friction is 25° and density of 17 kN/m^3 in dry state. **[7]**

OR

Q6) a) Explain how surcharge will affect earth pressure for cohesionless and cohesion soils in active state with pressure diagrams. **[6]**

b) A soil mass is retained by a smooth backed vertical wall of 6 m of height. The soil has a bulk unit weight of 20 KN/m^3 and $\varphi = 16°$. The top of the soil is level with the top of the wall and is horizontal. If the soil surface carries a uniformly distributed load of 4.5 KN/m^2, determine the total active thrust on the wall per linear metre of the wall and its point of application. **[7]**

Q7) a) State methods of remediation for soil contamination and explain any two of them. **[6]**

b) Explain the factor of safety with respect to shear strength, cohesion and friction. **[7]**

OR

Q8) a) Explain how soil acts as a geochemical trap and state the various remediation techniques. **[6]**

b) Write a short note on causes and remedial measures of landslides. **[7]**

✈ ✈ ✈

Total No. of Questions : 8]

SEAT No. : ____

P6502

[Total No. of Pages : 3

[5869] - 416
S.E. (Computer/Information Technology)
ENGINEERING MATHEMATICS - III
(2015 Pattern) (Semester - II) (207003)

Time : 2 Hours] ***[Max. Marks : 50***

Instructions to the candidates :

1) ***Neat diagrams must be drawn wherever necessary.***
2) ***Figures to the right indicate full marks.***
3) ***Your answers will be valued as a whole.***
4) ***Use of electronic pocket calculator is allowed.***
5) ***Assume suitable data, if necessary.***

Q1) a) Solve any two **[8]**

i) $\frac{d^2y}{dx^2}+3\frac{dy}{dx}=\frac{1}{1+e^{3x}}$

ii) $\frac{d^2y}{dx^2}+4y=e^x+x^2$

iii) Solve by Method of Variation of parameters $(D^2 - 2D)\, y = e^x \sin x$

b) Find the fourier cosine integral representation of $f(x)=\begin{cases}x^2 & : \quad 0<x<a\\ 0 & \quad x>a\end{cases}$. **[4]**

OR

Q2) a) Solve : $\frac{dx}{2x}=\frac{dy}{-y}=\frac{dz}{4xy^2-2z}$. **[4]**

b) Solve any one : **[4]**

i) Find Z-transform of $f(k) = k^2e^{-ak}$; $k \geq 0$.

ii) Find $Z^{-1}\left[\frac{3Z^2+2Z}{Z^2-3Z+2}\right]$; $1<|Z|<2$.

c) Solve the following difference equation $6f(k + 2) – f(k + 1) – f(k) = 0$, $f(0) = 0$, $f(1) = 1$. **[4]**

P.T.O.

Q3) a) Find first four moments about mean, if the first four moments about 10 are 3, 40, 100 and 400. Also find β_1 & β_2. **[4]**

b) Fit least squares straight line to the following data and use if to find the value of y at $x = 6$ **[4]**

x	1	2	3	4	5
y	0	0	2	6	12

c) A machine produces 2% defective bulbs. Bulbs are sold in a box of 100 bulbs, with a guarantee that no more than 3 bulbs are defective. Use Poisson distribution to determine the probability that a box will fail to meet the guarantee. **[4]**

OR

Q4) a) A problem of statics is given to 5 students A, B, C, D and E. Their chances of solving the problem are $\frac{1}{2}, \frac{1}{3}, \frac{1}{4}, \frac{1}{5}$ and $\frac{1}{6}$. What is the probability that problem is solved. **[4]**

b) In a certain factory turning out razor blades there is a small chance of $\frac{1}{500}$ for any blade to be defective. The blades are supplied in a packet of 10. Calculate approximate number of packets containing no defective and 2 defective blades in a consignment of 10,000 packets. **[4]**

c) Find correlation coefficient between X and Y, given that, $n = 25$, $\Sigma x = 75$, $\Sigma y = 100$, $\Sigma x^2 = 250$, $\Sigma y^2 = 500$, $\Sigma xy = 325$. **[4]**

Q5) a) If the directional derivative of $\phi = axy + byz + czx$ *at* (1, 1, 1) has maximum magnitude 4 in a direction parallel to x - axis, find the values of a, b, c. **[4]**

b) Find Cur | Cur | $\bar{F}$ at the point (0, 1, 2), where $\bar{F} = x^2 y\bar{i} + xyz\bar{j} + z^2 y\bar{k}$.**[4]**

c) Evaluate $\int_c \bar{F} \cdot d\bar{r}$ for $\bar{F} = 3x^2\bar{i} + (2xz - y)\bar{j} + z\bar{k}$ along the straight line joining (0, 0, 0) and (2, 1, 3). **[5]**

OR

Q6) a) Find the directional derivative of $\phi = x^2 - y^2 - 2z^2$ at the point P(2, –1, 3) in the direction PQ where Q is (5, 6, 4). **[4]**

b) Show that $\bar{F} = \frac{xi + yj}{x^2 + y^2}$ is solenoidal and irrotatioal. **[4]**

c) Find the work done in moving a particle once round the ellipse $\frac{x^2}{25} + \frac{y^2}{16} = 1, z = 0$ under the field of force given by

$\bar{F} = (2x - y + z)\bar{i} + (x + y - z^2)\bar{j} + (3x - 2y + 4z)\bar{k}$ **[5]**

Q7) a) Determine the analytic function $f(z) = u + iv$ if $u = x^3 - 3xy^2$. **[4]**

b) Find the bilinear transformation, which sends the points 1, i, -1 from z - plane into the points i, 0, - i of the w - plane. **[4]**

c) Evaluate $\oint_c \frac{2z^2 + z + 5}{(z - 3/2)^2} dz$, where 'c' is the ellipse $\frac{x^2}{4} + \frac{y^2}{9} = 1$. **[5]**

OR

Q8) a) Find the condition under which $u = ax^3 + bx^2 y + cxy^2 + dy^3$ is harmonic. **[4]**

b) Find the bilinear transformation, which maps the points $z = -1, 0, 1$ on to the points $w = 0, i, 3i$. **[4]**

c) Evaluate $\oint_c \frac{(z^2 + \cos^2 z)}{(z - \pi/4)^3} dz$, where c is $|z| = 1$. **[5]**

▽▽▽▽

Total No. of Questions : 8]

SEAT No. : ____

P3877

[Total No. of Pages : 2

[5869]-417

S.E. (Computer Engineering)

COMPUTER GRAPHICS

(2015 Pattern) (Semester - II) (210251)

Time : 2 Hours] ***[Max. Marks : 50***

Instructions to the candidates:

1) ***Answer Question. No. 1 or 2 and 3 or 4 and 5 or 6 and 7 or 8.***
2) ***Neat diagrams must be drawn whenever necessary.***
3) ***Figures to the right indicate full marks.***
4) ***Assume suitable data, if necessary.***

Q1) a) Explain Bresenham algorithm for line drawing. Write advantages and disadvantages of it over DDA line drawing algorithm. **[6]**

b) Explain scan fill algorithm for polygon filling. **[6]**

OR

Q2) a) Enlist and draw different types of polygon? Explain inside tests for polygon. **[6]**

b) Explain Bresenham algorithm for Circle drawing. What is meant by eight octant symmetry? **[6]**

Q3) a) What is perspective projection? Explain 1-point and 2-point perspective projection with diagram. **[6]**

b) Explain RGB and HSV model with diagram. **[6]**

OR

Q4) a) What is the use of segment in animation? Write an algorithm to rename a segment. Draw a sample segment table. **[6]**

b) Explain the steps for rotation about an arbitary axis in 3D. **[6]**

P.T.O.

Q5) a) What are different types of light sources. **[3]**

b) What is meant by hidden surface removal? Explain Painter's algorithm. **[4]**

c) What is meant by depth buffer (Z). Explain depth buffer algorithm to remove hidden surfaces. **[6]**

OR

Q6) a) What is Lambert's cosine law? What is its significance? **[3]**

b) Explain back face detection and removal. **[4]**

c) Explain Phong and Gauraud shading techniques. **[6]**

Q7) a) What is Koch curve? Draw steps to generate Koch curve. **[3]**

b) Write short note on openGL. (features and functions). **[4]**

c) Draw and explain NVIDIA workstation block diagram. **[6]**

OR

Q8) a) What is openGL? Explain any one openGL functions. **[3]**

b) What is Hilbert curve? Explain the generation of Hilbert curve. **[4]**

c) Explain Bezier curve generation with mid-point approach. **[6]**



Total No. of Questions : 8]

SEAT No. : ____

P3878

[Total No. of Pages : 2

[5869]-418
S.E. (COMPUTER)
ADVANCED DATA STRUCTURE
(2015 Pattern) (Semester - II) (210252)

Time : 2 Hours] ***[Max. Marks : 50***

Instructions to the candidates:

1) ***Neat diagram must be drawn whereever necessary.***
2) ***Figures to the night indicate full marks.***
3) ***Answer Q.1 or Q.2, Q.3 or Q.4, Q.5 or Q.6, Q.7 or Q.8***

Q1) a) Construct a threaded binary search tree for following given data. Show the step by step construction. **[6]**

IF, Do, NOT, CASE, FOR, KILL, REPEAT, AND, END, QUIT

b) Write a non-recursive algorithm for depth first traversal of graph using adjacency list. What is the time complexity depth first traversal? **[6]**

OR

Q2) a) Create a binary tree from given two traversal. **[6]**

Pre-order : F, A, E, K, C, D, H, G, B

Post-order : E, C, K, A, H, B, G, D, F

b) What is topological sorting? List their applications. Find the topological sorting of a given graph. **[6]**

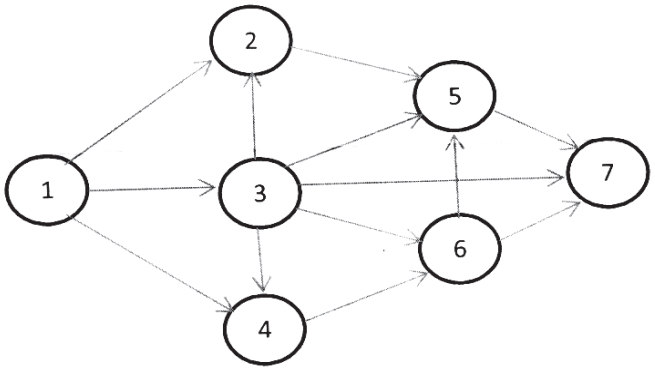

Q3) a) What is the average search cost for linear probing with and without replacement for the following data. Assume one slot per bucket and size the table is 20. **[8]**

78, 21, 14, 11, 97, 85, 74, 63, 45, 42, 57, 20, 16, 19, 52, 115, 66

P.T.O.

b) What is height balanced tree? Show with example how to calculate balance factor of a node in tree. **[4]**

OR

Q4) a) Construct the AVL tree for the following data by inserting each of the folloiwng data item one at a time. **[6]**

50, 55, 60, 15, 10, 40, 20, 45, 30, 47, 70, 80

b) What is table overflow and how it is handled using extendible hashing? **[6]**

Q5) a) Construct B tree of order 5 for following data. **[7]**

C, N, G, A, H, E, K, Q, M, F, W, L, T, Z, D, P, R, X, Y

b) What is min heap? Write a function to delete an element from min heap. **[5]**

c) Define splay tree. **[2]**

OR

Q6) a) What is B tree? Explain the process of deletion of node from B tree with example. **[7]**

b) Build max heap following data. **[5]**

60,80,35,75,43,32,78,15,55,68

After deletion of a one element show the final max heap.

c) Define red-black tree. **[2]**

Q7) a) Explain any two randomization technique with respect to random file organization. **[8]**

b) Waht is sequential file organization? State its disadvantages. **[4]**

OR

Q8) a) Explain linked organization of file. **[6]**

b) Write a short note on external sort. **[6]**



Total No. of Questions : 8]

SEAT No. : ____

P3879

[Total No. of Pages : 2

[5869]-419
S.E. (Computer)
MICROPROCESSOR
(2015 Pattern) (Semester - II) (210253)

Time : 2 Hours] ***[Max. Marks : 50***

Instructions to the candidates:

1) ***Answer Q.1 or Q.2, Q.3 or Q.4, Q.5 or Q.6, Q.7 or Q.8 .***
2) ***Neat diagram must be drawn wherever necessary.***
3) ***Figures to the right side indicate full marks.***
4) ***Assume Suitable data if necessary.***

Q1) a) Explain LEA and XLAT instructions **[2]**

b) With the help of diagram explain 80386 applications register set. **[5]**

c) List and explain any five control transfer instructions of 80386. **[5]**

OR

Q2) a) List Memory-Management Registers **[2]**

b) Write short note on “Descriptor Tables” **[5]**

c) With the help of flow chart explain the address translation mechanism of 80386. **[5]**

Q3) a) List different aspects of protection in 80386 **[2]**

b) Write a short note on “Multitasking” feature of 80386 **[4]**

c) Draw and explain 80386 Task Gate Descriptor **[6]**

OR

Q4) a) List the kinds of descriptors IDT may contain **[2]**

b) Write a ntoe on “Interrupt Procedures” **[5]**

c) Write a ntoe on “Interrupt Tasks” **[5]**

P.T.O.

Q5) a) Write a short note on "Switching to protected mode" **[3]**

b) Explain 80386 processor state after RESET **[4]**

c) Draw and explain debug registers of 80386. **[6]**

OR

Q6) a) Write a short note on "Virtual 8086 mode". **[3]**

b) Draw and explain structure of the TLB **[4]**

c) With the necessary diagrams explain entering and leaving V86 mode? **[6]**

Q7) a) Explain following signals **[3]**

i) LOCK#

ii) ADS#

iii) BS16#

b) Draw and explain 80387 register stack **[4]**

c) Draw Write cycle with non-pipelined address timing **[6]**

OR

Q8) a) Explain following signals **[3]**

i) HOLD

ii) HLDA

iii) BUSY#

b) Draw and explain 80387 control word format. **[4]**

c) Draw Read cycle with non-pipelined address timing. **[6]**



Total No. of Questions : 8]

SEAT No. : ____

P3880

[Total No. of Pages : 2

[5869]-420

S.E. (Computer Engineering)

PRINCIPLES OF PROGRAMMING LANGUAGES

(2015 Pattern) (Semester - II) (210254)

Time : 2 Hours] ***[Max. Marks : 50***

Instructions to the candidates:

1) ***All questions are compulsory.***
2) ***Figures to the right indicates full marks.***

Q1) a) Explain the use of paint (), update (), & repaint () methods for applet programming. What is the difference in paint () & repaint () methods? **[7]**

b) What is an exception in JAVA? How to handle the exceptions? Explain with example. **[6]**

OR

Q2) a) What is the use of PrintStream & PrintWriter classes? Which methods are supported by these classes? Explain with examples of each. **[7]**

b) Which class supports character input to the program? Write a JAVA program to read the name of the user & display welcome message. **[6]**

Q3) a) What are the programming language qualities? Explain in detail. **[6]**

b) What is generic programming? How C++ offers generic programming constructs? Explain with example. **[6]**

OR

Q4) a) Define the term SDLC. What are the different phases in SDLC? Describe the Waterfall model in detail with diagram. **[6]**

b) What are the benefits of built-in data types? State the built-in data types implemented by C++. **[6]**

P.T.O.

Q5) a) What is mean by Interface in Java? Explain with example. How this is different from Class? **[6]**

b) What is Inheritance? What are its advantages? Write a JAVA program which implements a simple Inheritance. **[7]**

OR

Q6) a) State the use of following in JAVA **[7]**

i) this keyword

ii) finalize () method

iii) garbage Collection

b) What is mean by Constructor? What are the different types of constructors? Explain with short example. **[6]**

Q7) a) What is mean by programming in the large? Explain its features in detail. **[6]**

b) Write a JAVA program to count the number of occurrence of an element form an Array. **[6]**

OR

Q8) a) What are the programming paradigms? Explain in detail with example. **[6]**

b) Write a JAVA program to check vowel or consonant using switch case. Input the character from the user. **[6]**



Total No. of Questions : 8]

SEAT No. : ____

P3881

[Total No. of Pages : 4

[5869]-421
S.E. (Computer Engineering)
DISCRETE MATHEMATICS
(2015 Pattern) (Semester - I) (210241)

Time : 2 Hours] ***[Max. Marks : 50***

Instructions to the candidates:

1) ***Answer questions Q.1 or Q.2, Q.3 or Q.4, Q.5 or Q.6, Q.7 or Q.8,***
2) ***Neat diagram must be drawn whenever necessary.***
3) ***Figures to the right side indicate full marks.***
4) ***Assume Suitable data if necessary.***
5) ***Justify your answer with an example wherever necessary.***

Q1) a) Show that followings propositions are logically equivalent without using truth table. **[4]**

i) $\neg(p \rightarrow q)$ and $(p \wedge \neg q)$

ii) $\neg(p \vee (\neg p \wedge q))$ and $(\neg p \wedge \neg q)$

b) Define the following terms **[3]**

i) Cardinality of set

ii) Power set

iii) Cartesian product

c) Find transitive closure of the given relation R by using Warshall's algorithm A={1,2,3,4} and R={(1,2), (2,1), (2,3), (3,4)} **[5]**

OR

Q2) a) It is observed that in second year class of 80 students 50 knew C++, 55 know Java and 46 know Python. It was also know that 37 knew C++ and Java, 28 Java and Python and 25 C++ and Python and 7 students not know any of the language then find **[4]**

i) How many knew all the three languages?

ii) How many knew exactly two languages?

iii) How many knew exactly one language?

b) Let A is a set of factor of positive integer m and relation is "divisibility" on A ie R={(X,Y) | X,Y € A, "*x* divides *y*"} for *m*=45. Find relation R and determine whether equivalence or not? also draw the diagraph. **[4]**

c) Let $f(x) = x+2$, $g(x) = x-2$, $h(x) = 3x$ find **[4]**

gof, fog, fof, hog, gog, foh, hof, fohog

P.T.O.

Q3) a) In how many ways 9 people can be seated at a round table if **[4]**

i) They can be seated anywhere

ii) 2 Particular person must not seated next to each other

b) **[4]**

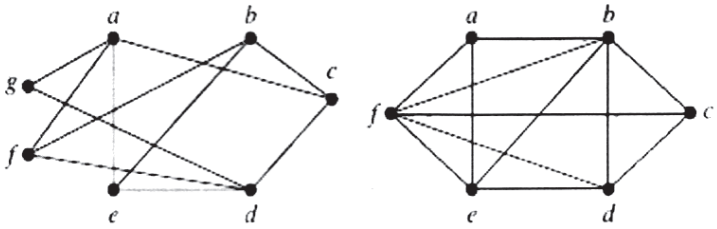

G H

Identify whether the given graph is bipartite or not? Justify your answer.

c) From 8 men and 4 women a team of 5 is to be formed. In how many ways this can be done so as to include at least one woman. **[4]**

OR

Q4) a) How many auto license plate can be prepared if Each is identified by 2 letters followed by 4 digits? **[4]**

i) If first digit can't be zero

ii) If first and last digit can't be zero

b) Determine whether the graphas G and H displayed in Figure are isomorphic or not? Justify your answer. **[4]**

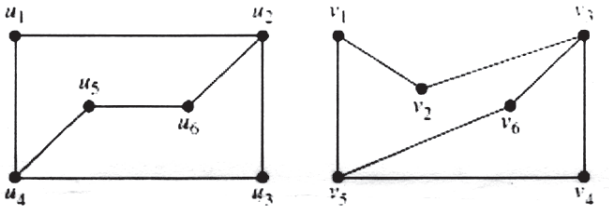

G H

c) Find the shortest path from a to z of the given graph by using Dijkstra algorithm. **[4]**

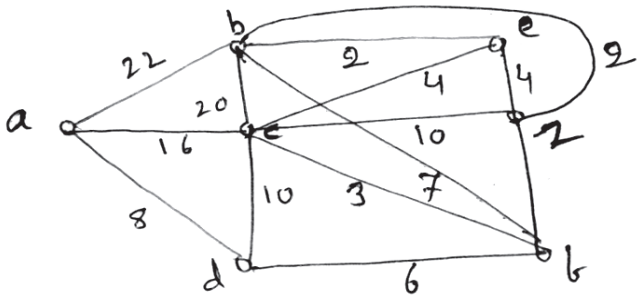

Q5) a) Use Huffman coding to encode the following symbols with the frequencies listed: A : 0.08, B: 0.10, C : 0.12, D :0.15, E : 0.20, F : 0.35. What is the average number of bits used to encode a character? **[5]**

b) Determine the maximum flow in the following transport network **[5]**

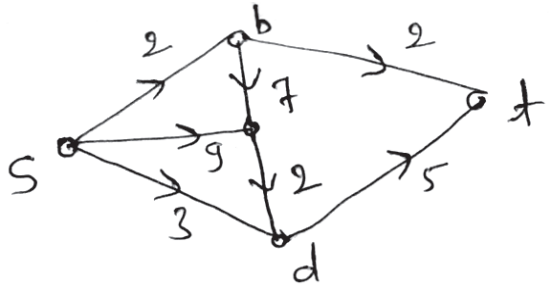

c) Differentiate between Binary tree (BT) and Binary search tree (BST) **[3]**

OR

Q6) a) Find the minimum spanning tree using Prim's algorithm. The graph is shown in figure below **[5]**

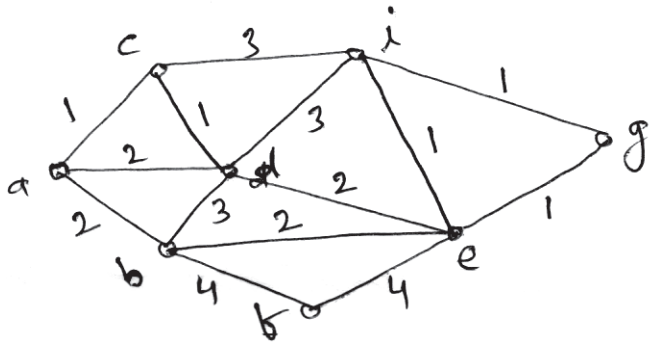

b) Find the fundamental circuit and cutest of the following graph. **[5]**

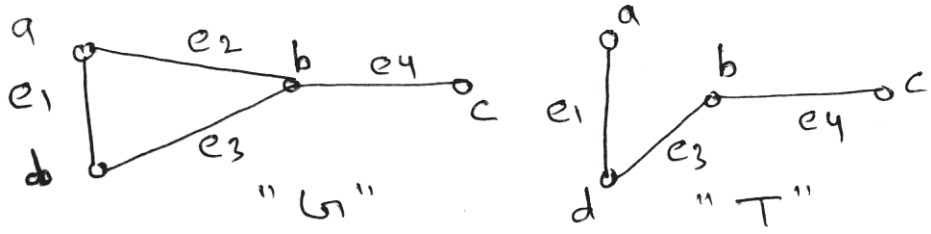

c) Define following **[3]**

i) N-ary tree

ii) Height of tree

iii) Rooted tree

Q7) a) Define the algebraic system. Explain the following w.r.t. algebraic system **[6]**

i) Group

ii) Semi group

iii) Abelian group

b) Let G={EVEN, ODD} and a binary operation ⊕ be defined as shown in following figure. **[7]**

⊕	**EVEN**	**ODD**
EVEN	EVEN	ODD
ODD	ODD	EVEN

Is (G,⊕) a group?

OR

Q8) a) Define the following terms **[6]**

i) Ring

ii) Integral domain

iii) Field

b) Let R={0°, 60°, 120°, 180°, 240°, 300°}. Let ★be a binary operation so that a ★ b is the overall angular rotation corresponding to the successive rotations by a and then by b. (R, ★) is a group. Is followings subgroups. **[7]**

a. ({0°, 120°, 240°},★)

❖ ❖ ❖

Total No. of Questions : 8]

SEAT No. : ____

P3882

[Total No. of Pages : 2

[5869]-422

S.E. (Computer Engineering)

DIGITAL ELECTRONICS AND LOGIC DESIGN (210242)

(2015 Pattern) (Semester - I)

Time : 2 Hours] ***[Max. Marks : 50***

Instructions to the candidates:

1) ***Attempt Q.1 or Q.2, Q.3 or Q.4, Q.5 or Q.6, Q.7 or Q.8,***
2) ***Neat diagram must be drawn whenever necessary.***
3) ***Assume suitable data if necessory.***

Q1) a) Prove for 2-bit comparator $y(A>B)=(A1\bar{B}1)+(A1A0\bar{B}0)+(A0\bar{B}1\bar{B}0)$ (assume A1 and B1 as MSB). **[4]**

b) Minimize folloiwing logic function and realize using discrete gates **[4]**
F(A,B,C,D) = ∑m(0,1,2,3,4,7,9,12,13,14,15)+d(8,12).

c) Draw and explain Johnson and ring counter using JK FF (timing diagram is expected). **[4]**

OR

Q2) a) Design full adder using 74151 multiplexer IC. **[4]**

b) Design a random bit sequence generator for the sequence 1101011 using shift register. Draw diagram for the same. **[6]**

c) Compare combinational and sequential circuit. **[2]**

Q3) a) Design 2 bit up counter using multiplexer controller method, if X=0 it should count up, if X=1 it should remain in same state.
Also draw ASM chart for the same. **[8]**

b) Implement the following boolean function using PAL **[4]**
F1=∑m(1,2,3,7,12,15)
F2=∑m(0,5,6,13,14)
F3=∑m(0,1,2)
F4=∑m(6,8,13,15)

OR

Q4) a) Write VHDL code for 2 bit comparator using dataflow modeling style. **[4]**

b) Explain entity declaration for 3:8 decoder having enable line. **[2]**

c) Design 3 bit UP counter using PLA. **[6]**

P.T.O.

Q5) a) State the following characteristics of digital TTL and CMOS Ics. **[4]**

i) Speed of operation

ii) FAN out

b) Draw and explain wired AND gate. **[4]**

c) Draw and explain TTL NAND gate. **[5]**

OR

Q6) a) Explain interfacing of TTL and CMOS. **[8]**

i) CMOS driving TTL

ii) TTL driving CMOS

b) Explain TTL open collector output logic. **[5]**

Q7) a) Name any eight application of micro controller 8051. **[4]**

b) Explain any 3 addressing modes of 8051 with example. **[6]**

c) Explain following pins of 8051. **[3]**

i) RXD

ii) $P\bar{S}EN$

iii) $\bar{E}A$

OR

Q8) a) Which pins of 8051 are used for interrupt. **[7]**

Draw and explain IE and IP register.

b) Explain following instruction with respective 8051 and give example of each. **[6]**

i) MUL

ii) PUSH

iii) LJMP



Total No. of Questions : 8]

SEAT No. : ____

P3883

[Total No. of Pages : 2

[5869]-423

S.E. (Computer Engineering)

DATA STRUCTURES AND ALGORITHMS

(2015 Pattern) (Semester - I) (210243)

Time : 2 Hours] ***[Max. Marks : 50***

Instructions to the candidates:

1) ***Solve Q.1 or Q.2, Q.3 or Q.4, Q.5 or Q.6, Q.7 or Q.8.***
2) ***Neat diagrams must be drawn whenever necessary.***
3) ***Figures to the right indicate full marks.***
4) ***Assume suitable data, if necessary.***

Q1) a) Define Algorithm and its characteristics. **[3]**

b) Explain the algorithmic strategy of divide and conquer. Explain its application in binary search. **[4]**

c) Write C/C++ pseudocode to perform simple transpose of sparse matrix. Also, discuss its time complexity. **[6]**

OR

Q2) a) Define and explain the following terms: **[3]**

i) Linear data structure

ii) Non-linear data structure

iii) Time complexity

b) Explain polynomial representation using linked list with suitable example. **[4]**

c) Write a C/C++ program that counts the number of times a given int occurs in an array. **[6]**

Q3) a) Write the difference between Singly Linked List and Doubly Linked List. **[3]**

b) Write Pseudo C/C++ code to reverse the singly linked list. **[3]**

c) Convert following infix expression to postfix expression: **[6]**

((A + B) – C * (D / E)) + F

Use stack and show step by step conversion.

OR

P.T.O.

Q4) a) What is recursion? Explain use of stack for "Web page visit history in a web browser". **[3]**

b) Explain Generalized linked list with example. **[3]**

c) Write pseudo C/C++ code to represent stack as an ADT. **[6]**

Q5) a) Write a pseudo C/C++ code to implement circular queue using arrays. **[6]**

b) Define the following terms with examples: **[6]**

i) Linear Queue

ii) Dequeue

iii) Priority Queue

OR

Q6) a) Explain linear queue and circular queue with suitable example. Also, give advantages of circular queue over linear queue. **[6]**

b) Explain priority queue. Give pseudo C/C++ code for array implementation of priority queue. **[6]**

Q7) a) Explain sequential search and binary search with suitable example and compare their time complexity. **[6]**

b) Sort the following numbers using Merge sort. **[7]**

55, 85, 45, 11, 34, 05, 89, 99, 67

Discuss its time complexity and space complexity.

OR

Q8) a) Sort the following list using insertion sort **[7]**

18, 13, 12, 22, 15, 24, 10, 16, 19, 14, 30.

Discuss its time complexity and space complexity.

b) What is sentential search. Explain with an example. **[6]**



Total No. of Questions : 8]

SEAT No. :

P3884

[Total No. of Pages : 2

[5869]-424

S.E. (Computer)

COMPUTER ORGANIZATION & ARCHITECTURE

(2015 Pattern) (Semester - I) (210244)

Time : 2 Hours] ***[Max. Marks : 50***

Instructions to the candidates:

1) ***Neat diagrams must be drawn wherever necessary.***
2) ***figures to the right indicate full marks.***
3) ***Assume suitable data, if necessary.***

Q1) a) List and explain various cache replacement policies. **[6]**

b) Solve following problem using non-restoring division algo show every step cleary. Dividend-1001 Divisor-0011 **[6]**

OR

Q2) a) Explain principle of 'locality of Reference' with example. **[6]**

b) Explain Single precision and double precision floating point formats with example. **[6]**

Q3) a) Differentiate between programmed I/O and interrupt driven I/O Explain Interrupt processing. **[6]**

b) Explain following addressing modes with example of each. **[6]**

i) Direct addressing mode.

ii) Register indirect addressing.

iii) Auto decrement addressing.

OR

Q4) a) Explain in detail various features of 8086. **[6]**

b) What is difference between memory mapped & I/O mapped I/O **[6]**

P.T.O.

Q5) a) Explain instruction issue. Explain concept of in order and out of order issue. **[6]**

b) What are pipeline hagards? Explain various types of data hazards. **[7]**

OR

Q6) a) Write a short note on superscalar Exeacution and superscalar implementation. **[7]**

b) What is register renaming? What is its purpose? **[6]**

Q7) a) Write a control sequence for the complete instruction fetch and execution for following instruction for single bus organisation SUB (R_3), R_2 where R_2 is destination register. **[7]**

b) Explain any one method for hardwired control unit design. **[6]**

OR

Q8) a) Compare horigontal and Vertical Microinstruction formats. **[6]**

b) Draw and explain Microprogram control unit. **[7]**

● ● ●

Total No. of Questions : 8] **SEAT No. :**

P3885 **[Total No. of Pages : 2**

[5869]-425
S.E. (Computer Engg.)
OBJECT ORIENTED PROGRAMMING
(2015 Pattern) (Semester - I) (210245) (Theory)

Time : 2 Hours] ***[Max. Marks : 50***

Instructions to the candidates:

1) ***Answer Q.1 or Q.2, Q.3 or Q.4, Q.5, or Q.6, Q.7 or Q.8.***
2) ***Neat diagrams must be drawn wherever necessary.***
3) ***Figures to the right indicate full marks.***
4) ***Assume suitable data, if necessary.***

Q1) a) What are inline functions? What are their advantages? Give an example. **[6]**

b) What is the difference between Inheritance and Containment? Write a program in C++ to defend your answer. **[6]**

OR

Q2) a) What is Multiple Inheritance? What is the ambiguity in Multiple inheritances? Give suitable example to demonstrate multiple inheritance. **[6]**

b) Explain the concept of class and object with suitable Example. **[4]**

c) What are Primitive data types and User defined data types? **[2]**

Q3) a) How smart pointers avoids the problem of memory leak. **[4]**

b) Compare and contrast memory allocation and deallocation using new, delete. **[4]**

c) What is the concept of function pointers? Give suitable example in C++ **[5]**

OR

Q4) a) Explain the significance of Static keyword in programming. **[3]**

b) Write a suitable C++ Program to illustrate the concept of Generic Programming. **[6]**

c) Explain why we need templates in C++? **[4]**

P.T.O.

Q5) a) Write a program to overload insertion (<<) and extraction (>>) operator in C++. **[6]**

b) Write a program to create a file, read and write the record into it. **[7]**

Every record contains Employee Name, Id, and Salary. Store and retrieve at least 3 employee

OR

Q6) a) Write a C++ program that will accept numbers as command line arguments and Sort the entered Numbers in Ascending order and display the resultant sequence. **[7]**

b) Compare between early binding and late binding in C++ **[6]**

Q7) a) Use minimum 6 functions of vector STL. Write a program to explain the same . **[7]**

b) What is a stack? How is it implemented using STL? **[5]**

OR

Q8) a) What is a container? List the container classes in C++. Explain any one of container Class using a program. **[6]**

b) Write a program to implement Deque using STL Container. **[6]**



Total No. of Questions : 8] **SEAT No. :**

P3886 **[Total No. of Pages : 3**

[5869]-426

S.E. (Electrical)

ELECTRICAL MACHINES - I

(2015 Pattern) (Semester - II) (203146)

Time : 2 Hours] ***[Max. Marks : 50***

Instructions to the candidates:

1) ***Answer Q.No.1 or Q.No. 2, Q.No. 3 or Q.No.4, Q.No.5, or Q. No.6, Q.No.7 or Q.No.8.***
2) ***Neat diagrams must be drawn wherever necessary.***
3) ***Figure to right indicate full marks.***
4) ***Use of Non-Programmable Scientific Calculators is allowed.***
5) ***Assume suitable data if necessary.***

Q1) a) O.C. and S.C. test is conducted on 200/400 V, 50 Hz single phase transformer **[7]**

gives reading as:

O.C. Test : 200V, 0.8A, 80W ..... on L.V. Side,

S.C. Test : 15V, 10A, 100W ..... on H.V. Side,

Find

i) No load current components

ii) Equivalent resistance and leakage reactance referred to primary side.

b) State the necessity of parallel operation of transformer. State any four necessary condition for satisfactory parallel operation of transformer. **[6]**

OR

Q2) a) Define voltage regulation of a transformer. Describe the effect of power factor on voltage regulation of a transformer. **[6]**

b) Step by step obtain the approximate equivalent circuit of 1-ph transformer referred on primary side. Draw the circuit diagram and write down the equations during each step. **[7]**

P.T.O.

Q3) a) The armature winding of 4-pole, 240 V, dc shunt motor is lap connected. It has 120 slots with 10 conductors/slots. The Flux/pole is 20mWb and current drawn by the motor is 25A. The armature and shunt field resistances are 0.1Ω & 120Ω respectively. The rotational losses are 830 W. **[6]**

Calculate

i) Gross Torque ii) Shaft Torque

iii) Lost Torque and iv) Efficiency

b) Draw and explain following characteristics of DC Shunt motor. **[6]**

i) Torque - Armature Current

ii) Speed - Armature Current

iii) Speed - Torque

OR

Q4) a) ADC shunt motor working at 220 V takes a current of 4 Amp at no-load and runs at 720 rpm. The armature resistance is 0.2 ohm and shunt field resistance is 110 ohm. Calculate its speed at full load condition if full load current is 50 Amp. Assume that flux is reduced by 3% on full load condition due to armature reaction. **[6]**

b) What is commutation; explain briefly. What are the causes of bad commutation? Explain remedial measure on it. **[6]**

Q5) a) Derive the expression for the following ratio for the 3-phase induction motor **[6]**

$$\frac{Full\ Load\ Torque}{Maximum\ Torque}$$

b) A 6 pole 550 V, 50 Hz 3-ph induction motor develops gross output power of 32 HP when running at 950 rpm. The mechanical losses are 2 Hp and stator losses equals to 2000 W. **[6]**

Find-

i) % slip

ii) rotor copper loss in Watt

iii) input power and

iv) efficiency

Take 1 HP = 745.7 Watt

OR

Q6) a) Explain how a rotating magnetic field is produced in a three-phase induction motor. **[6]**

b) A 3-phase induction motor has synchronous speed of 250 rpm and slip of 4% at full load. The rotor has resistance of 0.02 ohm per phase and standstill reactance of 0.15 ohm per phase. **[6]**

Calculate:

i) Ratio of maximum torque to full load torque.

ii) The speed at which maximum torque is developed.

Q7) a) State the effect of addition of rotor resistance on torque slip characteristics of 3-phase induction motor. Draw the torque slip characteristics for different values of rotor resistance & explain it in brief. **[6]**

b) Develop approximate equivalent circuit for 3-phase induction motor in steps. Write its assumptions made. **[7]**

OR

Q8) a) With neat connection diagram explain the procedure with observation table to conduct on load and blocked rotor test on 3-phase induction motor. **[7]**

b) Compare following starts used for 3-phase induction motor. Star-delta starter; Auto transformer starter. **[6]**

✠ ✠ ✠

Total No. of Questions : 8]

SEAT No. : ____

P3887

[Total No. of Pages : 2

[5869]-427

S.E. (Electrical)

POWER SYSTEM - I

(2015 Pattern) (Semester - II) (203145)

Time : 2 Hours] ***[Max. Marks : 50***

Instructions to the candidates:

1) ***Answer Q1 or Q2, Q3 or Q4, Q5 or Q6, Q7 or Q8.***
2) ***Neat diagrams must be drawn wherever necessary.***
3) ***Figures to the right indicate full marks.***
4) ***Assume Suitable data, if necessary.***

Q1) a) A generating station has a connected load of 43MW and maximum demand of 20MW. The units generated $61.5*10^6$ per annum. Calculate. **[6]**

i) Demand factor.

ii) Average load.

iii) Load factor.

b) Explain in short the necessity of the following equipments used in substation. **[8]**

i) Current limiting reactor.

ii) Circuit breaker.

iii) Earth switch.

iv) Lightning arrester.

OR

Q2) a) Define term tariff and explain Time of the day tariff in detail. **[6]**

b) Name the different types of insulators used in power system? Explain the applications of each type of insulators? **[8]**

Q3) a) What are different factors affecting sag of transmission line? Derive an expression for sag when supports are at equal level from ground? **[7]**

b) In a three phase transmission line, three conductors are spaced at equal distance from each other i.e. 2.5m. The diamter of each conductor is 1.3 cm. Find inductance per kilometer length of the line. **[4]**

OR

P.T.O.

Q4) a) Derive an expression for internal and external flux linkages of conductors carrying current 'I' ampere and derive expression for inductance of signle phase line. **[7]**

b) Give the classification of undergound cables? **[4]**

Q5) a) Derive an expression for capacitance to neutral of three phase overhead transmission line with symmetrical spacing of conductors. **[6]**

b) A single phase line is having two single standard conductors and radius of 0.328 cm. the conductors are separated by 4m apart and 8m above the ground. Calculate capacitance to ground per kilometer without earth effect and with considering earth effect. **[6]**

OR

Q6) a) Derive the equation for capacitance per kilometer of a single phase transmission line having distance 'D' between the conductors and 'r' is radius of each conductor. **[6]**

b) Explain the methods of images in determining the effect of earth on capacitance calculation for overhead transmission lines. **[6]**

Q7) a) Express the relationship for sending end voltage (V_s) and sending end current (I_s) in terms of receiving end voltage (V_R) and receiving end current (I_R) for a medium length transmission line with nomianl 'π' method of representation. Evaluate generalized circuit constants. Draw neat circuit diagram and phasor diagram. **[7]**

b) A single phase overhead transmission line deliver 2000KW at 33KV at 0.85 power factor lagging. The total resistance and inductive reactance of the line are 10 Ω and 15Ω respectively. Determine. **[6]**

i) Sending end voltage.

ii) Sending end power factor.

iii) Transmission efficiency.

OR

Q8) a) Give classification of transmission line. Explain the effect of load power factor on regulation and efficiency of transmission line? **[7]**

b) A three phase, 132 KV transmission line is connected to a 50MW load at power factor of 0.85 lagging. The line constants of 80km long line are $Z=96 < 78^{o}\ \Omega$ and $Y= 0.001< 90^{o}$ (Siemens). **[6]**

Using Nominal 'T' methods claculate A, B, C and D constants of transmission line.

✡ ✡ ✡

Total No. of Questions : 8]

SEAT No. : ____

P3888

[Total No. of Pages : 4

[5869]-428

S.E. (Electrical Engineering)

NETWORK ANALYSIS

(2015 Pattern) (Semester - II) (203147)

Time : 2 Hours] ***[Max. Marks : 50***

Instructions to the candidates:

1) ***Answer Q. 1 or 2, Q. 3 or 4, Q. 5 or 6, Q. 7 or 8.***
2) ***Neat diagrams must be drawn whenever necessary.***
3) ***Figures to the right indicate full marks.***
4) ***Use of Calculator is allowed.***
5) ***Assume Suitable data, if necessary.***

Q1) a) Simplify the circuit shown in fig(1) and Find V_1. **[7]**

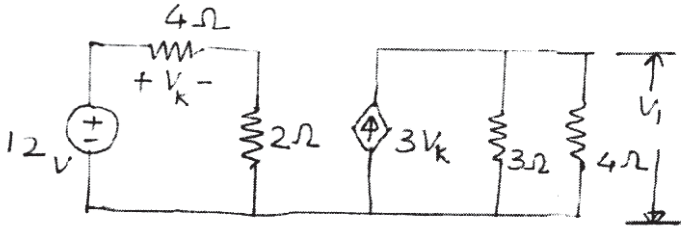

Fig (1)

b) Draw the dotted diagram & Find equivalent reactance as shown in fig (2).**[6]**

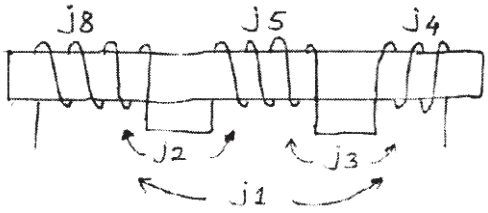

Fig (2)

OR

Q2) a) Find current through 5 Ω using Nortons Theorem as shown in fig (3).**[7]**

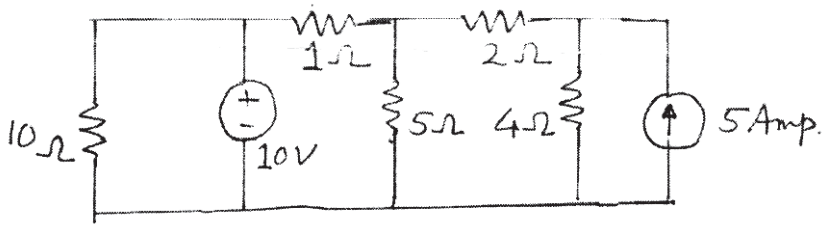

Fig. (3)

P.T.O.

b) Find current through 15 Ω by using Millmans Theorem. **[6]**

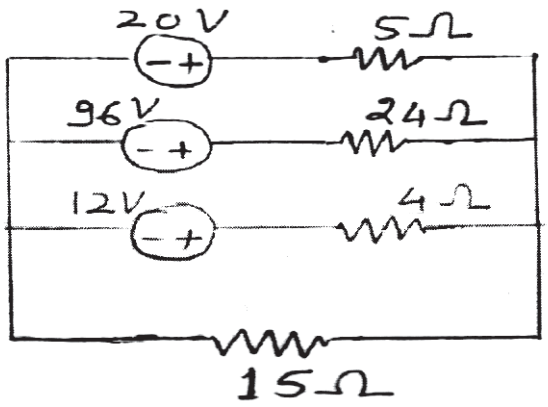

Fig. (4)

Q3) a) Find particular solution for i(t) when switch K is moved from x to y at time t = 0. Steady state current having previously obtained in Circuit use conventional method. **[7]**

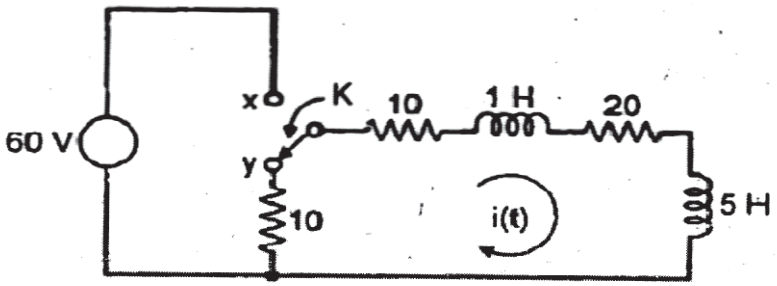

b) R-L-C circuit is excited by DC voltage source. Find current i(t) using conventional method. The switch is closed at time t = 0. **[6]**

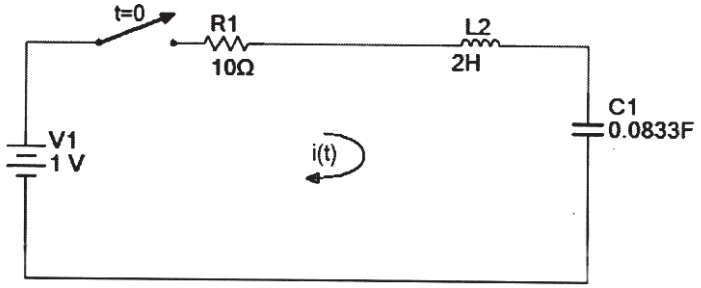

OR

Q4) a) For the circuit shown in Fig. below determine the current i(t), when the switch is moved, from position 1 to position 2 at t = 0. The switch has been at position 1 for a long time to get the steady state values. Use Laplace transform method. **[7]**

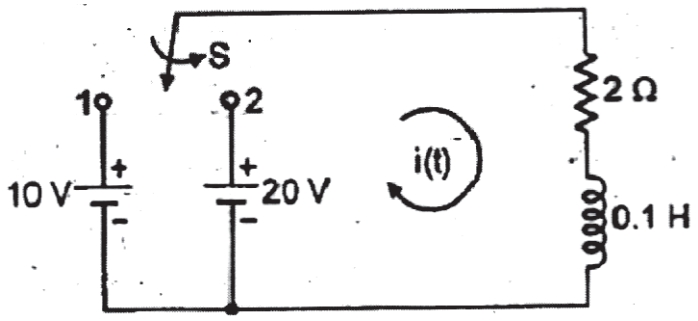

b) Obtain the inverse Laplace transform of F(s) = 1/s(s+2) by using convolution integral. **[6]**

Q5) a) For the network shown in fig. Find Z parameters. **[6]**

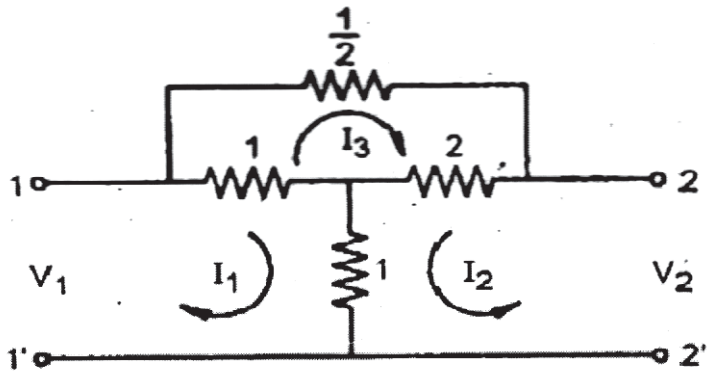

b) Develop the relationship between Transmission & Hybrid Parameters. **[6]**

OR

Q6) a) Find Transfer Function of network as shown in fig. **[6]**

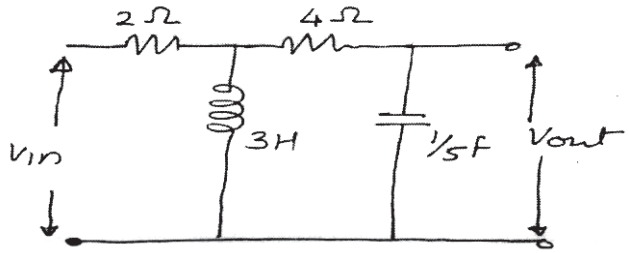

b) Obtain Z parameter of network as shown in Fig. **[6]**

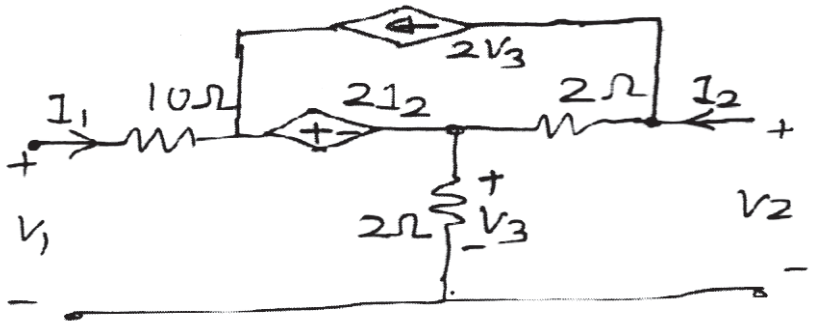

Q7) a) Derive the expression for attenuation constant and Phase shift of proto type constant K low pass filter. **[6]**

b) A low pass filter is composed of symmetrical π - section. Each series arm and shunt arm is 0.03 Henery and 3 microfarad. Find cutoff frequency and design Resistance. **[6]**

OR

Q8) a) A HPF section is constructed from two capacitors 2 microfarad each and 20 milli Henery find cutoff frequency and design Resistance. **[6]**

b) Design a T section constant K HPF having cut off frequency of 20 KHz and nominal Design Resistance R_0 = 500 ohms. Also find Character Impedance Z_0 and phase constant at 28 KHz. **[6]**

Total No. of Questions : 8]

SEAT No. : ____

P3889

[Total No. of Pages : 2

[5869]-429
S.E. (Electrical)
NUMERICAL METHODS AND COMPUTER PROGRAMMING
(2015 Pattern) (Semester - II) (203148)

Time : 2 Hours] ***[Max. Marks : 50***

Instructions to the candidates:

1) ***Attempt Q.1 or Q.2, Q.3 or Q.4, Q.5 or Q.6, Q.7 or Q.8.***
2) ***Neat diagram must be drawn whenever necessary.***
3) ***Assume suitable data if necessory.***

Q1) a) What are different data types in 'C' language? Give their Ranges. **[6]**

b) Explain trunction and round off error. **[6]**

OR

Q2) a) Explain the following instructions used in C programming. **[6]**

i) printf

ii) scanf

iii) getch

b) Show 2 iterations of Birge Vieta method for **[6]**

$f(x)=x^3-4x^2+x+6$ Take $p_0=1.5$

Q3) a) Solve the following equation $f(x)=x^3-2x-5$ using Regula Falsi method. Show 5 iterations. **[6]**

Take $x_0=2$ and $x_1=3$

b) Fit a straight line to the following data. Find y when $x=150$ **[7]**

X	50	70	100	120
Y	12	15	21	25

OR

Q4) a) Find the root of equation by Newton Raphson method **[6]**

$f(x) = 3x-\cos x-1$ Take $x_0 = 0$. Show 4 iterations.

b) Use Lagrange's interpolation formula to find $f(9)$ for the given data **[7]**

X	5	7	11	13	17
Y	150	392	1452	2366	5202

P.T.O.

Q5) a) Derive the equation for Simpson's 3/8 the rule for numerical integration using Newton's Cotes formula **[6]**

b) Using modified Euler's formula solve the following differential equation. **[7]**

$\frac{dy}{dx} = \sqrt{x+y}$. Given x_0=1, y_0=2.2 Find the value of y at x=1.1 and Take step size as h=0.1 Accuracy 0.001

OR

Q6) a) Using Simpson's rule integrate **[6]**

$$\int_2^{2.6} \int_4^{4.4} \frac{dx\ dy}{xy}$$

Take h =0.2 and k = 0.3

b) Apply RK 4th order method to find y for x=0.2. Given $\frac{dy}{dx} = x + y^2$,

Given x_0=0, y_0=1

h = 0.1 **[7]**

Q7) a) Solve the following system of equations by Gauss Elimination method. **[6]**

$x+4y-z = -5$

$x+y-6z = -12$

$3x-y-z = 4$

b) Find numerically the largest eigen value by power method. Show 5 iterations. **[6]**

$$A = \begin{bmatrix} 5 & 4 \\ 1 & 2 \end{bmatrix} \quad X_0 = \begin{bmatrix} 1 \\ 0 \end{bmatrix}$$

OR

Q8) a) Find $[A]^{-1}$ using Gauss-Jordan method **[6]**

$$A = \begin{bmatrix} 2 & 2 & 3 \\ 2 & 1 & 1 \\ 1 & 3 & 5 \end{bmatrix}$$

b) Use Jacobi's method to solve the following system of equations at the end of 5th iterations. Use initial values as x = 0, y = 0 and z = 0. **[6]**

$10x + y - z = 11.19$

$x + 10y + z = 28.08$

$-x + y + 10z = 35.61$

❖ ❖ ❖

Total No. of Questions : 8]

SEAT No. : ____

P3890

[Total No. of Pages : 2

[5869]-430
S.E. (Electrical)
FUNDAMENTALS OF MICROCONTROLLER AND ITS APPLICATIONS
(2015 Pattern) (Semester - II) (203149)

Time : 2 Hours] ***[Max. Marks : 50***

Instructions to the candidates:

1) ***Attempt Q. No. 1 or Q 2, Q. No. 3 or Q. 4, Q. No. 5 or Q. 6, Q. No. 7 or Q. 8.***
2) ***Figures to the right indicate full marks.***
3) ***Neat diagram must be drawn wherever necessary.***
4) ***Use suitable data.***

Q1) a) List and explain in brief the SFR's associated with the following functions.
i) I/O ports
ii) Interrupts
iii) Timer/Counter **[6]**

b) Describe the salient features of 8051 microcontroller and the various flags in the PSW registers. **[7]**

OR

Q2) a) Enlist and explain all the instructions that are associated with rotate operation. **[8]**

b) Write a program to multiply two 8 bit number stored at external memory location AE00 & AE01. Stored the result in next memory location i.e. AE02 & AE03. **[5]**

Q3) a) Write a program to generate a square wave at port 1. **[6]**

b) Discuss the various timer modes supported by 8051 microcontroller. What is special about the auto reload mode? **[6]**

OR

Q4) a) Enlist the various interrupts in 8051 microcontroller together with its vector location. What are the cause of interrupts? **[6]**

b) What are the various SFR's you need while programming a serial port? Write a short program to initialize the serial port in mode 1 in 8051 microcontroller. **[6]**

P.T.O.

Q5) a) State the operation of PPI 8255 in mode 0, model & BSR mode. **[6]**

b) Draw the interfacing diagram of DAC (0808) with 8051 microcontroller with explanation. **[6]**

OR

Q6) a) Define the function of following pin of ADC (0809). **[6]**

i) Clock

ii) Analog input

iii) Start

iv) EOC

v) OE

vi) ALE

b) Explain the function of following pin of DAC (0808). **[7]**

i) RESET

ii) A0-A1

iii) PA0-PA7

iv) $\overline{CS}$

v) $\overline{RD}$

vi) $\overline{WR}$

Q7) a) Draw the interfacing diagram of relay with 8051 microcontroller. Explain in brief. **[6]**

b) Draw the schematic diagram of frequency measurement with 8051 microcontroller. Explain in brief. **[7]**

OR

Q8) a) Draw and explain the matrix keyboard interfacing with 8051 microcontroller. **[6]**

b) Write an assembly program to rotate a stepper motor 117° in clockwise direction. The motor has a step of 1.8^{o}. **[6]**



Total No. of Questions : 8]

SEAT No. : ____

P3891

[Total No. of Pages : 3

[5869]-431
S.E. (ELECTRICAL)
ENGINEERING MATHEMATICS - III
(2015 Pattern) (Semester - I) (207006)

Time : 2 Hours] ***[Max. Marks : 50***

Instructions to the candidates:

1) ***Answer Q.1 or Q.2, Q.3 or Q4, Q.5 or Q.6, Q.7 or Q.8.***
2) ***Blak figures to the right indicate full marks.***
3) ***Neat diagram must be drawn wherever necessary.***
4) ***Use electronic pocket calculator is allowed.***
5) ***Assume suitable data, if necessary.***

Q1) a) Solve any two **[8]**

i) $(D^2+2D+1)\,y = 2\cos x+2$

ii) $(D^2+4)y=\tan 2x$ by method of variation of parameters

iii) $x^2\frac{d^2y}{dx^2}-4x\frac{dy}{dx}+6y=x^5$

b) Solve by laplace transform method **[4]**

$\frac{d^2y}{dt^2}+y=0$ with y (0) = 1, y' (0) = 2

OR

Q2) a) A circuit consists of an inductance L and condenser of capacity C in series. An alternating e.m.f. E sin n t is applied to it at time t=0, the initial current and charge on the condenser being zero. Find the current flowing in the circuit at any time for ω=n where $\omega^2=\frac{1}{LC}$. **[4]**

b) Solve any one **[4]**

i) $L\left\{\frac{1-\cos t}{t}\right\}$

ii) $L^{-1}\left\{\frac{s^2+2}{s(s^2+4)}\right\}$

c) Using Laplace transform evaluate $\int_0^\infty \frac{e^{-t}-e^{-3t}}{t}\,dt$. **[4]**

P.T.O.

Q3) a) Find Fourier transform of $f(x)=\begin{cases}1-x^2, & |x|\le 1\\ 0, & |x|>1\end{cases}$ **[4]**

b) solve (Any ONE) **[4]**

i) Find z–transform of $f(k) = 2^k \cos(4k+3)$, $k \ge 0$

ii) Find $Z^{-1}\left\{\frac{z^2}{z^2+1}\right\}, |z|>1$

c) Find directional derivative of $\phi = e^{2x-y-z}$ at (1,1,1) in the direction of the tangent to the curve $x=e^{-t}$, $y=2\sin t+1$, $z=t-\cos t$ at $t = 0$. **[4]**

OR

Q4) a) solve (Any ONE) **[4]**

i) $\nabla\times\left(\frac{\bar{a}\times\bar{r}}{r^n}\right)=\frac{2-n}{r^n}\bar{a}+\frac{n}{r^{n+2}}(\bar{a}.\bar{r})\bar{r}$

ii) $\nabla\bullet(r^3\bar{r})=6r^3$

b) Show that $\bar{F}=\frac{1}{r}(r^2\bar{a}+(\bar{a}.\bar{r})\bar{r})$ is irrotationl. **[4]**

c) Solve $f(k+1)+\frac{1}{2}f(k)=\left(\frac{1}{2}\right)^k, k\ge 0, f(0)=0$ **[4]**

Q5) a) Find the workdone in moving a particle once round the ellipse $\frac{x^2}{25}+\frac{y^2}{16}=1, z=0.$ under the field of force given by.

$\bar{F}=(2x-y+z)\bar{i}+(x+y-z^2)\bar{j}+(3x-2y+4z)\bar{k}$ **[5]**

b) Evaluate $\int_C \bar{F}.d\bar{r}$ using stoke's theorem. where $\bar{F}=xy^2\bar{i}+y\bar{j}+z^2x\bar{k}$ and C is the boundary of the rectangle given by $x=0$, $y=0$, $x=1$, $y=2$, $z=0$. **[4]**

c) Show that $\iiint_V \frac{dV}{r^2}=\iint_S \frac{\bar{r}.\hat{n}}{r^2}dS.$ **[4]**

OR

Q6) a) Using Green's Lemma evaluate $\int_C \bar{F}.d\bar{r}$ where $\bar{F} = (\cos y\,\bar{i} + x(1-\sin y)\bar{j})$ and C is a closed curve given by $x^2+y^2=1$, $z=0$. **[5]**

b) Evaluate $\iint_S (x\bar{i} + y\bar{j} + z^2\bar{k}).d\bar{S}$ where S is the closed surface of the cylinder $x^2+y^2=4$. bounded by the planes $z=0$ & $z=2$. **[4]**

c) Evaluate $\iint_S (\nabla \times \bar{F}).d\bar{s}$ where $\bar{F} = (x^3 - y^3)\bar{i} - xyz\,\bar{j} + y^3\bar{k}$ and s is the surface $x^2+4y^2+z^2-2x=4$ above the plane $x=0$. **[4]**

Q7) a) Find K such that the function $f(z)=r^3 \cos 3\theta + ir^3 \sin k\theta$ is analytic **[4]**

b) Evaluate $\int_C \frac{e^z}{(z+1)(z+2)}dz$ where C is the circle $|z+1|=\frac{1}{2}$. **[4]**

c) Find the bilinear transformation, which maps the points $z=-1, 0, 1$ on to the points $w=0, i, 3i$. **[5]**

OR

Q8) a) Show that $f(z)=\bar{z}$ and $f(z)=|z|^2$ are not analytic. **[4]**

b) Evaluate $\int_C \frac{z^4-1}{z(z+2)\left(z+\frac{1}{2}\right)}dz$ where C is the circle $|z|=1$ using residue theorem. **[5]**

c) Show that $w=\frac{z-i}{1-iz}$ maps upper half of the z– plane onto the interior of the unit circle in w-plane. **[4]**



Total No. of Questions : 8]

SEAT No. : ____

P3892

[Total No. of Pages : 1

[5869]-432

S.E. (Electrical Engineering)

POWER GENERATION TECHNOLOGIES

(2015 Pattern) (Semester - I) (203141)

Time : 2 Hours] ***[Max. Marks : 50***

Instructions to the candidates:

1) ***Answer Q.No.1 or Q.No.2, Q.No. 3 or Q. No. 4, Q. No. 5 or Q. No. 6, Q. No. 7 Or Q. No.8.***
2) ***Figures to the right indicate full marks.***
3) ***Assume suitable data if necessary.***

Q1) a) Explain method to improve thermal efficiency of Gas power Plant. **[6]**

b) Explain Site selection for Thermal Power Plant. **[6]**

OR

Q2) a) Explain working Electrostatic Precipitator with neat Diagram. **[6]**

b) Explain the Nuclear plant with the help of diagram. **[6]**

Q3) a) What is Hydrology? Explain Hydrograph. **[6]**

b) Explain Environmental Impacts of Wind Turbines. **[6]**

OR

Q4) a) Explain selection of Hydro-electric turbine for Hydro Power Plant. **[6]**

b) Explain Pitch control of Wind Turbines. **[6]**

Q5) a) Define the terms in solar energy system: **[6]**

i) Solar constant.

ii) Cloudy index.

iii) Concentration ratio.

b) Explain the Flat Plated solar collector with neat diagram. **[7]**

OR

Q6) a) Explain the working of photovoltaic cell with neat diagram. **[7]**

b) Elaborate the I-V curve in series and parallel combination of PV cell. **[6]**

Q7) a) Describe principle of operation the fuel cells with diagram. **[7]**

b) Write a short note on Stand-alone renewable systems. **[6]**

OR

Q8) a) Explain the Biomass energy conversion with diagram. **[7]**

b) Write a short note on ocean energy. **[6]**

✡ ✡ ✡

Total No. of Questions : 8]

SEAT No. : ____

P3893

[Total No. of Pages : 2

[5869]-433
S.E. (ELECTRICAL)
ANALOG & DIGITAL ELECTRONICS
(2015 Pattern) (Semester - I) (203143)

Time : 2 Hours] ***[Max. Marks : 50***

Instructions to the candidates :

1) ***Attempt Q.No.1 or 2, Q.No.3 or 4, Q.No.5 or 6, Q.No.7 or 8.***
2) ***Figures to the right indicate full marks.***

Q1) a) Perform following arithmetic operations. **[6]**

i) Add 73 and 19 BCD numbers

ii) Convert decimal 374.37 in hexadecimal

b) i) Explain Gray code to binary and Binary to Gray code conversion.

ii) Explain Excess-3 code with example. **[7]**

OR

Q2) a) Minimize following Boolean expression using K-map in POS form. **[6]**

$Y = A\bar{B}C + BCD + ACD + \bar{A}B$

b) Draw and explain design of MOD 5 Synchronous counter using T flip Flop. **[7]**

Q3) a) Design source of DC 8 V from 28V DC power supply using LM 371 adjustable voltage regulator. **[6]**

b) Explain working of OP-AMP as inverting and non inverting Comparator with waveforms. **[6]**

P.T.O.

OR

Q4) a) Explain working of IC 555 monostable multivibrator. **[6]**

b) Explain operation of OP-AMP as Sine wave generator and draw waveforms. **[6]**

Q5) a) Explain Transistor Differential amplifier with circuit diagram. **[6]**

b) Explain operation of RC coupled two stage amplifiers with advantages, disadvantages and applications. **[7]**

OR

Q6) a) Write short note on Push Pull amplifier with waveforms. **[7]**

b) Explain JFET parameters i) Dynamic drain resistance ii) Transconductance iii) Amplification factor. **[6]**

Q7) a) Explain working of three phase half wave rectifier with R load. **[6]**

b) Draw and explain half wave precision rectifier. **[6]**

OR

Q8) a) Compare three phase half wave and full wave bridge rectifier. **[6]**

b) Single phase rectifier has a purely resistive load of 10W, energized by voltage source of 220V throughout two windings transformer with ratio 2:1. **[6]**

Determine:

i) the average and rms voltage and current

ii) the efficiency, TUF

iii) FF, RF.



Total No. of Questions : 8]

SEAT No. :

P3894

[Total No. of Pages : 3

[5869]-434

S.E. (Electrical)

MATERIAL SCIENCE

(2015 Pattern) (Semester - I) (203142)

Time : 2 Hours] ***[Max. Marks : 50***

Instructions to the candidates :

1) ***Solve Q1 or Q2, Q3 or Q 4, Q5 or Q6, Q7 or Q8.***
2) ***Neat diagrams must be drawn wherever necessary.***
3) ***Figures to the right indicate full marks.***
4) ***Assume suitable data, if necessary.***

Physical Constants:

1. Angstrom Unit (AU) $1 \times l0^{-10}$ metres
2. Boltzmann's Constant (k) = 1.380×10^{-23} joule.degree -l
3. Charge on Electron (e) = $1.601 \times l0^{-19}$ coulomb
4. Mass of Electron (m) = 9.107×10^{-31} kg
5. Electron volt (eV) = 1.602×10^{-19} joules
6. Mass of Proton (m_p) = 1.627×10^{-27} kg
7. Velocity of light (c) = 2.998×10^{8} m/sec
8. Dielectric Constant of free space (ε_0) $8.854 \times l0^{-12}$ F/m
9. Permeability of free space (μ_0) $4\pi \times 10^{-7}$ H/m
10. Debye Unit = 3.33×10^{-30} coulomb. metre

Q1) a) What are different mechanisms of polarization? Explain any two with diagram. **[6]**

b) What is the difference between dielectric material and insulating material? Hence write the properties and application of paper and ceramics. **[6]**

OR

P.T.O.

Q2) a) A parallel plate capacitor has a capacitance of 2μF, The dielectric has a permittivity ε_r = l00. For an applied voltage of 1000 volts, find the energy stored in the capacitor as well as the energy stored in polarizing the dielectric. **[6]**

b) Explain the phenomenon of spontaneous polarization in ferroelectric materials with neat diagram. **[6]**

Q3) a) Explain the terms diamagnetism, paramagnetism. ferromagnetism and antiferromagnetism and ferrimagnetism with the reference to magnetic dipoles of the atom with neat diagrams. **[6]**

b) Write materials used for super-capacitors, solders and super conductors. **[6]**

OR

Q4) a) Define with units- **[6]**

(i) Permeability

(ii) Magnetic Susceptibility

(iii) Magnetic Dipole Moment

(iv) Magnetization

b) Describe the properties and application of the following materials. **[6]**

(i) High conductive materials (Any One)

(ii) Low conductive materials (Any One)

Q5) a) Explain electrical, mechanical and vibrational properties of carbon nano tubes. Give two applications of carbon nano tubes. **[7]**

b) Explain with neat diagram, chemical reaction and application of Lead acid battery. **[6]**

OR

Q6) a) What do you mean by molecular machine? **[6]**

b) Explain with neat diagram, chemical reaction and application of Nickel Cadmium Battery. **[7]**

Q7) a) With neat diagram, explain method of measurement of dielectric strength of solid insulating material. Name the solid insulating materials, which are tested in laboratory. **[7]**

b) Describe measurement of flux density with Gauss meter. What is the principle of operation of Gauss meter? **[6]**

OR

Q8) a) With neat circuit diagram and phasor diagram, explain measurement of dielectric loss angle (tan δ) by Schering Bridge as per IS 13585-1994.**[7]**

b) How will you test transformer oil? Explain with neat diagram of the test set up. **[6]**



Total No. of Questions : 8]

SEAT No. :

P3895

[Total No. of Pages : 2

[5869]-435

S.E. (Electrical)

ELECTRICAL MEASUREMENTS & INSTRUMENTATION

(2015 Pattern) (Semester - I) (203144)

Time : 2 Hours] ***[Max. Marks : 50***

Instructions to the candidates :

1) ***Answer Q1 or Q2, Q3 or Q4, Q5 or Q6, Q7 or Q8.***
2) ***Neat diagrams must be drawn wherever necessary.***
3) ***Figures to the right indicate full marks.***
4) ***Use of logarithmic tables slide rule, Mollier charts, electronic pocket calculator and steam tables is allowed.***
5) ***Assume suitable data, if necessary.***

Q1) a) Derive torque equation for PMMC instrument. Comment on shape of scale. Compare giving example: Repeatability and reproducibility. **[6]**

b) Explain Maxwell Inductance Capacitance Bridge. **[6]**

OR

Q2) a) Show connections of CT and PT to extend range of ammeter and voltmeter. What are the advantages of CT/PT over shunt and multipliers for range extension of MI instruments? **[6]**

b) Explain the working of Earth tester for measurement of earth resistance with neat diagram. **[6]**

Q3) a) Three equal impedances, each consisting of R and L in series are connected in star and are supplied from a 400 Volts, 50 Hz, 3-phase, 3-wire balanced supply system. The power input to the load is measured by 2-wattmeter method and the two wattmeters read 3 kW and 1kW. Determine the values of R and L connected in each phase. **[7]**

b) What are different types of errors and adjustments in single phase energy meter? **[6]**

P.T.O.

OR

Q4) a) A 230 V, single phase, watt-hour meter has a constant load of 4 A passing through it for 6 hours at unity power factor. If the meter disc makes 2208 revolutions during this period. What is the meter constant in revolutions per kWh. Calculate the power factor of the load if the number of revolutions made by the meter are 1472 when operating at 230 V and 5 A for 4 hours. **[6]**

b) With suitable circuit diagram and phasor diagram explain reactive power measurement by one wattmeter and a two way switch. **[7]**

Q5) a) With neat diagram, describe the working of Pirani gauge. **[6]**

b) Explain the following term associated with CRO : **[6]**

i) Volts/division
ii) XY-mode
iii) Invert

OR

Q6) a) Give detail classification of transducers. **[6]**

b) With a block diagram explain working of Digital Storage Oscilloscope. What are the advantages of DSO? **[6]**

Q7) a) Explain construction and working of LVDT with neat diagram. **[7]**

b) Explain level measurement by mechanical method. **[6]**

OR

Q8) a) Give types of strain gauges. Explain foil strain gauge. **[7]**

b) Explain ultrasonic flow meter with neat diagram. **[6]**



Total No. of Questions : 8]

SEAT No. : ____

P6503

[Total No. of Pages : 4

[5869]-436
S.E. (Electronics/E & TC)
ENGINEERING MATHEMATICS - III
(2015 Pattern) (Semester - II) (207005)

Time : 2 Hours] ***[Max. Marks : 50***

Instructions to the candidates:

1) ***Attempt Q.No.1 or Q.No.2, Q.No.3 or Q.No.4, Q.No.5 or Q.No.6, Q.No.7 or Q.No. 8.***
2) ***Neat diagram must be drawn wherever necessary.***
3) ***Figures to the right indicate full marks.***
4) ***Use of electronic pocket calculator is allowed.***
5) ***Assume suitable data, if necessary.***

Q1) a) Solve any two of the following : **[8]**

i) $\frac{d^2y}{dx^2} + \frac{4dy}{dx} + 4y = \frac{e^{-2x}}{x^2}.$

ii) $\frac{d^2y}{dx^2} + y = \text{cosec } x$ (using method of variation of parameters).

iii) $\frac{x^2d^2y}{dx^2} - 4x\frac{dy}{dx} + 6y = x^5.$

b) Find the Fourier cosine transform of : **[4]**

$f(x) = \bar{e}^x + \bar{e}^{2x}$, $x > 0.$

OR

Q2) a) An inductor of 0.25 henries with negligible resistance, a capacitor of 0.04 farads are connected in series and having an alternating voltage (12 sin 6t). Find the current and charge at any time *t*. **[4]**

b) Solve any one of the following : **[4]**

i) Find Z - transform of :

$f(k) = k\,2^k, \quad k \geq 0$

P.T.O.

ii) Find inverse Z - transform of

$$F(z) = \frac{z}{(z-1)(z-2)}, \qquad |z| > 2$$

iii) Solve the difference equation **[4]**

$f(k+2) + 3f(k+1) + 2f(k) = 0$

where $f(0) = 0$, $f(1) = 1$, $k \geq 0$

Q3) a) Find Lagrange's interpolating polynomial passing through set of points :

x	0	1	2
y	3	2	3

use it to find y at $x = 3$. **[4]**

b) Use Runge-Kutta method of Fourth order to obtain the numerical solutions of $\frac{dy}{dx} = \frac{1}{x+y}$, $y(0) = 1$ to find y at $x = 0.2$ with $h = 0.2$. **[4]**

c) Find the directional derivative of $\phi = xy + z^2$ at (2, 1, 1) along the direction $\bar{i} + 2\bar{j} - 2\bar{k}$. **[4]**

OR

Q4) a) Show that (any one) : **[4]**

i) $$\nabla\left(\frac{\bar{a}.\bar{r}}{r^2}\right) = \frac{\bar{a}}{r^2} - \frac{2(\bar{a}.\bar{r})\bar{r}}{r^4}.$$

ii) $$\nabla \cdot \left(r \nabla \frac{1}{r^5}\right) = \frac{15}{r^6}.$$

b) Show that $\bar{F} = (6xy + z^3)\bar{i} + (3x^2 - z)\bar{j} + (3xz^2 - y)\bar{k}$ is irrotational. Find scalar ϕ such that $\bar{F} = \nabla\phi$. **[4]**

c) A curve is drawn to pass through the points given by the following table:

x	1	1.5	2	2.5	3	3.5	4
y	2	2.4	2.7	2.8	3	2.6	2.1

Estimate $\int_1^4 y\,dx$ by Simpson's $\frac{1}{3}^{rd}$ rule. **[4]**

Q5) a) A vector field is given by

$\overline{F} = \sin y\ \overline{i} + x(1+\cos y)\overline{j}$,

evaluate the integral $\int_C \overline{F}.d\overline{r}$ where C is the circle $x^2 + y^2 = 4$, $z = 0$. **[4]**

b) Using Gauss-Divergence theorem show that

$$\iint_s \frac{\overline{r}\cdot\hat{n}}{r^2} ds = \iiint_v \frac{dv}{r^2},$$

Where v represents the volume enclosed by a closed surface S. **[4]**

c) Using Stoke's theorem evaluate $\iint_s (\nabla \times \overline{F}) \cdot d\overline{s}$ for

$\overline{F} = (x^2 + y - 4)\overline{i} + 3xy\,\overline{j} + (2xz + z^2)\overline{k}$

over the surface of hemisphere $x^2 + y^2 + z^2 = 16$ above the plane $z = 0$. **[5]**

OR

Q6) a) Evaluate $\int_c \overline{F}\cdot d\overline{r}$, where $\overline{F} = 3y\,\overline{i} + 2x\,\overline{j}$ and C is the boundary of the region $0 \le x \le \pi$; $0 \le y \le \sin x$. **[4]**

b) Using Gauss-Divergence theorem show that $\iint_s \overline{F}\cdot d\overline{s} = 6V$, where $\overline{F} = \nabla r^2$ and S is a closed surface containing the volume V. **[4]**

c) Evaluate $\iint_S (\nabla \times \overline{F}) \cdot d\overline{s}$, for $\overline{F} = xy^2\,\overline{i} + y\,\overline{j} + z^2x\overline{k}$ over the surface of rectangular lamina bounded by $x = 0$, $x = 1$, $y = 0$, $y = 2$, $z = 0$. **[5]**

Q7) a) If $f(z)$ is analytic, show that $\left(\frac{\partial^2}{\partial x^2} + \frac{\partial^2}{\partial y^2}\right)|f(z)|^2 = 4|f^1(z)|^2$. **[4]**

b) Evaluate, $\int_c \frac{2z^2+5}{(z-2)(z+3)} dz$, where C is $|z - 2| = 1$. **[5]**

c) Find the bilinear trans formation, which maps the points $z = -1, 0, 1$ onto the points $w = 0, i, 3i$. **[4]**

OR

Q8) a) If $u = x^4 - 6x^2y^2 + y^4$, find v such that the function $f(z) = u + iv$ is an analytic function. **[4]**

b) Evaluate $\int_c \frac{z^3 - 5}{(z+1)(z-2)} dz$, where C is the circle $|z| = 3$. **[5]**

c) Show that, under the transformation $w = z + \frac{4}{2}$, the circle $|z| = 2$ is mapped onto the straight line. **[4]**

❄ ❄ ❄

Total No. of Questions : 8]

SEAT No. :

P3896

[Total No. of Pages : 2

[5869]-437

S.E. (E&TC/Electronics) (Semester - II)

INTEGRATED CIRCUITS (204187)

(2015 Pattern)

Time : 2 Hours] ***[Max. Marks : 50***

Instructions to the candidates :

1) ***Solve Q.1 or Q.2, Q.3 or Q.4, Q.5 or Q.6, and Q.7 or Q.8.***
2) ***Neat diagrams must be drawn wherever necessary.***
3) ***Figures to the right indicate full marks.***
4) ***Use of calculator is allowed.***
5) ***Assume suitable data, if necessary.***

Q1) a) Explain Differential amplifier using transistor with suitable circuit diagram: Dual input balance output. **[6]**

b) Draw three op amp Instrumentation amplifier and derive its output equation. **[6]**

OR

Q2) a) Explain Voltage shunt feedback amplifier using op-amp and derive expression for its voltage gain. **[6]**

b) Draw ideal and practical Integrator circuit along with frequency response and explain its operation. **[6]**

Q3) a) Draw and explain inverting Schmitt Trigger circuit in detail, draw necessary input output voltage waveforms for sinusoidal input. **[6]**

b) Explain inverting and non-inverting HWR with suitable circuit diagram, output input voltage waveforms for positive and negative half cycles? **[6]**

P.T.O.

OR

Q4) a) Draw and explain triangular wave generator circuit. Draw necessary waveforms. **[6]**

b) Explain R-2R ladder DAC and write its output equation (3 Bit). **[6]**

Q5) a) Explain PLL operation with neat block diagram. **[7]**

b) Explain Wein Bridge Oscillator circuit using op-amp. **[6]**

OR

Q6) a) Define the terms related to PLL Lock range, capture range and free running frequency. Write equation for the same. **[6]**

b) Draw phase shift oscillator circuit using op-amp. If the capacitor is of 1 nF and resistor is of 1 KΩ calculate frequency of oscillator. Also if frequency is doubled by keeping capacitor value same calculate resistor value. **[7]**

Q7) a) Explain with circuit diagram second order high pass filter. If the cut off frequency of 159.15 Hz is used with 0.1 µF capacitor calculate resistor required. **[7]**

b) Draw and explain wide Band pass filter with its frequency response. **[6]**

OR

Q8) a) Draw and explain circuit diagram of second order low pass filter using Non-inverting Op-Amp configuration. **[6]**

b) Design a Non-inverting first order high pass filter with cut-off frequency 10 kHz with pass gain of 1.5. Draw the designed circuit diagram. **[7]**

Assume: C = 0.01 µF, R_F = 5 KΩ.



Total No. of Questions : 8]

SEAT No. : ____

P3897

[Total No. of Pages : 3

[5869] - 438

S.E. (Electronics / E & TC)

CONTROL SYSTEMS

(2015 Pattern) (Semester - II) (204188)

Time : 2 Hours] ***[Max. Marks : 50***

Instructions to the candidates :

1) ***Neat diagrams must be drawn wherever necessary.***
2) ***Figures to right indicate full marks.***
3) ***Assume suitable data, if necessary.***
4) ***Use of electronic pocket calculator is allowed.***

Q1) a) Obtain Transfer Function of system represented by signal flow graph shown in figure no. 1 **[6]**

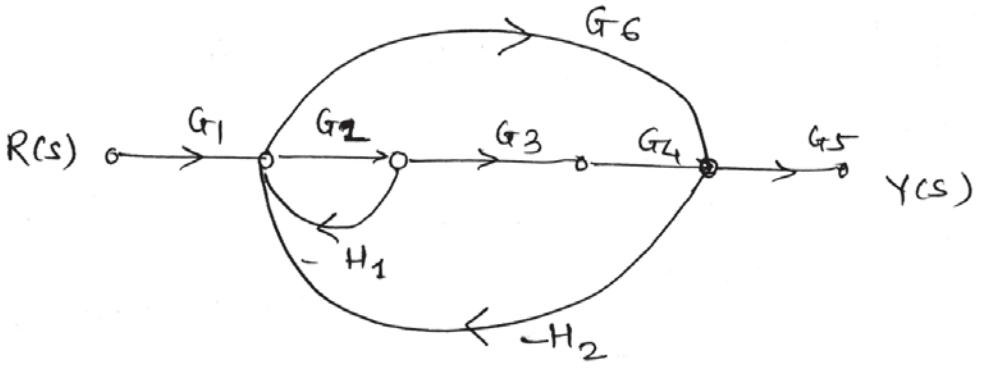

Figure 1

b) A system has a open loop transfer function G(S) H(S) = $\frac{16}{S(S+6)}$ **[6]**

Find undamped natural frequency, damping ratio, rise time, peak time, peak overshoot, settling time with 2% criteria.

OR

P.T.O.

Q2) a)

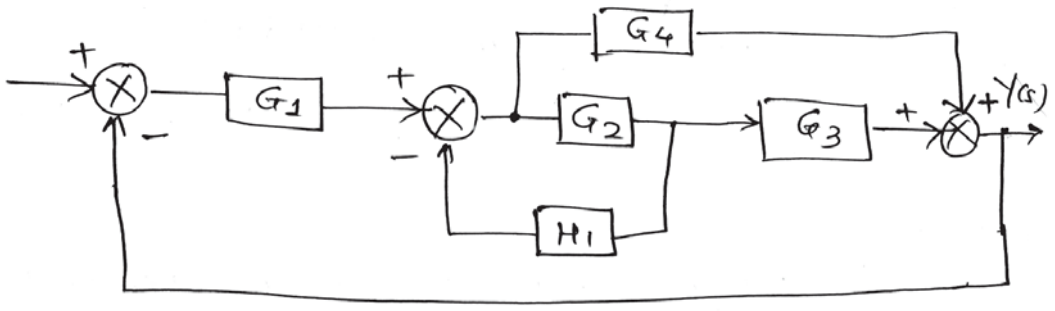

Figure (2)

Determine the overall transfer function of the system shown in figure (2) using block diagram reduction rules. **[6]**

b) A unity feedback system has $G(S)=\dfrac{40(S+2)}{S(S+1)(S+4)}$ **[6]**

Determine :

i) Type of system

ii) All error coefficients

iii) Error for ramp i/p with magnitude 4.

Q3) a) For the system with characteristic equation

$Q(S) = S^5 + S^4 + 3S^3 + 9S^2 + 16S + 10$

Find stability using Routh Criteria also State no. of poles lie on RHS. **[6]**

b) Draw Bode plot for unity feedback system of given by **[6]**

$G(S)H(S)=\dfrac{40(S+5)}{S(S+2)(S+10)}$ & comment on stability.

OR

Q4) a) Sketch root locus of $G(S)=\dfrac{K}{S(S+1)(S+3)(S+4)}$. **[6]**

b) Sketch Nyquist plot for $G(S)=\dfrac{1}{S(S+1)}$. **[6]**

Q5) a) Obtain state space representation in controllable & observable canonical form for system $T(S)=\dfrac{S+3}{S^2+3S+2}$. **[6]**

b) For the system shown in the following fig (3), $V_1(t)$, $V_2(t)$ as state variables & write down the state equation satisfied by them. **[7]**

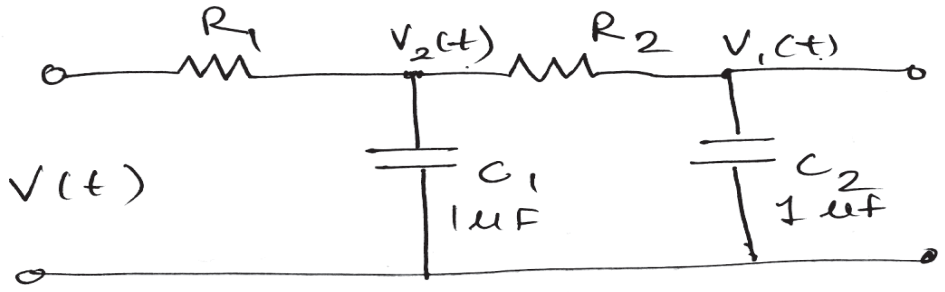

Figure (3)

OR

Q6) a) Obtain the state Transition matrix for the system with state equation using laplace transform. **[7]**

$$\begin{bmatrix}\dot{X}\end{bmatrix}=\begin{bmatrix}0 & 1\\ -8 & -9\end{bmatrix}\begin{bmatrix}X\end{bmatrix}$$

b) Derive formula of state transition matrix & state any four properties. **[6]**

Q7) a) i) Draw ladder diagram for D Elevator **[6]**
ii) Bottle filling plant.

b) Write short note on PI, PD, PID controller. **[7]**

OR

Q8) a) Write a note on digital control system with help of suitable block diagram. **[6]**

b) Find pulse transfer function and Impulse response of system shown in figure (4) **[7]**

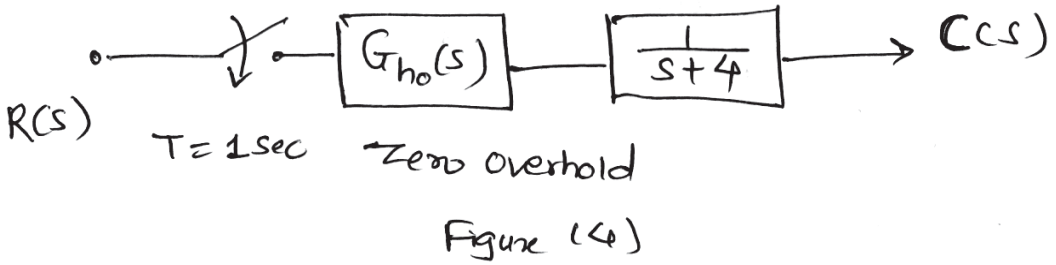

Figure (4)

▽▽▽▽

Total No. of Questions : 8]

SEAT No. :

P3898

[Total No. of Pages : 2

[5869] - 439
S.E. (Electronics / E & TC)
ANALOG COMMUNICATION
(2015 Pattern) (Semester - II) (204189)

Time : 2 Hours] *[Max. Marks : 50*

Instructions to the candidates :

1) ***Answer Q.1 or Q.2, Q.3 or Q.4, Q.5 or Q.6 and Q.7 or Q.8.***
2) ***Neat diagrams must be drawn wherever necessary.***
3) ***Figures to the right indicate full marks.***
4) ***Your answers will be valued as a whole.***
5) ***Use of logarithmic tables slide rule, Mollier charts, electronic pocket calculator and steam tables is allowed.***
6) ***Assume suitable data, if necessary.***

Q1) a) What is modulation? Explain need of modulation and its types. **[6]**

b) An audio frequency signal 10 sin 2π (1000t) is used to amplitude modulate the carrier of 50 sin 2π (10^6). Calculate, **[6]**

i) Modulation Index
ii) Sideband frequencies
iii) Amplitude of each side band
iv) Bandwidth
v) Transmission efficiency
vi) Total power delivered to load of 600Ω

OR

Q2) a) Explain the following terms, **[6]**

i) Selectivity
ii) Sensitivity
iii) Fidelity
iv) Image frequency

b) In broadcast super heterodyne receiver having no RF amplifier, the loaded Q of antenna coupling circuit is 80. If the intermediate frequency is 455KHz. Calculate, the image frequency & its rejection ratio at 1000KHz. **[6]**

P.T.O.

Q3) a) Draw and explain the block diagram of super heterodyne FM receiver. **[6]**

b) Discuss principle working of FM detection. Briefly explain any one FM detector method. **[6]**

OR

Q4) a) Describe Armstrong method of Indirect FM generation. **[6]**

b) State the significance of pre-emphasis and de-emphasis in FM. **[6]**

Q5) a) Derive expression for friss formula for noise factor of amplifier in cascade. **[7]**

b) Define Noise and explain various sources of Noise. **[6]**

OR

Q6) a) Explain the performance of SSBSC in presence of noise. **[7]**

b) An amplifier circuit having noise figure of 9dB and power gain of 25dB is followed by mixer having noise figure of 16dB. Calculate overall noise figure & equivalent noise temperature. **[6]**

Q7) a) Describe types of sampling with their merits and demerits. **[7]**

b) Compare PAM, PWM and PPM. **[6]**

OR

Q8) a) With the help of block diagram explain transmitter and receiver of PCM. **[6]**

b) State and prove sampling theorem with suitable waveform and mathematical expression? What is aliasing? How is it reduced? **[7]**

▽▽▽▽

Total No. of Questions : 8]

SEAT No. :

P3899

[Total No. of Pages : 2

[5869] - 440
S.E. (E & TC / Electronics)
204190 : OBJECT ORIENTED PROGRAMMING
(2015 Pattern) (Semester - II)

Time : 2 Hours] ***[Max. Marks : 50***

Instructions to the candidates :

1) ***Attempt Q.1 or Q.2, Q.3 or Q.4, Q.5 or Q.6, Q.7 or Q.8.***
2) ***Neat diagrams must be drawn wherever necessary.***
3) ***Figures to the right indicate full marks.***
4) ***Use of calculator is allowed.***
5) ***Assume suitable data, if necessary.***

Q1) a) What do you mean by memory management operator? What are different memory management operators in C++. **[6]**

b) Explain the concept of operator overloading with suitable code. **[6]**

OR

Q2) a) Explain following concepts in C++ **[6]**

i) Abstraction

ii) Encapsulation

iii) Polymorphism

b) Write a C++ program to implement multiple inheritance. **[6]**

Q3) a) State and explain features of Java. **[7]**

b) Explain different methods of string class in Java. **[6]**

OR

Q4) a) What do you mean by token in programming language. What are different tokens in Java? **[6]**

b) Explain the concept : Garbage collection, this keyword and final with suitable example. **[7]**

P.T.O.

Q5) a) Explain the concept of inheritance in Java. Explain the use of super while implementing inheritance with suitable example. **[6]**

b) What is method overriding? Write a Java program to illustrate concept of method overriding. **[6]**

OR

Q6) a) What is package in Java? Explain the concept of importing package with a small code. **[6]**

b) Explain concept of interface in Java. Differentiate between class and interface. **[6]**

Q7) a) What is multithreading? How to create a thread by extending thread class. **[7]**

b) What is exception handling? Explain how to handle exception with try-catch blocks. **[6]**

OR

Q8) a) What are applets? What are their types? How do applets differ from applications? **[7]**

b) Explain with suitable example, how to read a character and string from input console. **[6]**

▽▽▽▽

Total No. of Questions : 8]

SEAT No. : ____

P3900

[Total No. of Pages : 4

[5869] - 441
S.E. (Electronics / E & TC)
204181 : SIGNALS & SYSTEMS
(2015 Pattern) (Semester - I)

Time : 2 Hours] ***[Max. Marks : 50***

Instructions to the candidates :

1) ***Attempt Q.1 or Q.2, Q.3 or Q.4, Q.5 or Q.6, Q.7 or Q.8.***
2) ***Neat diagrams must be drawn wherever necessary.***
3) ***Figures to the right indicate full marks.***
4) ***Assume suitable data, if necessary.***

Q1) a) A signal $x(t)$ is shown in following figure sketch **[4]**

i) $y_1(t) = x(-2t + 3)$

ii) $y_2(t) = x(t) + x(-2t + 3)$



b) A signal $x(t)$ is shown in following figure. Check whether it is periodic or Aperiodic. If periodic find the period and power of the signal. **[2]**

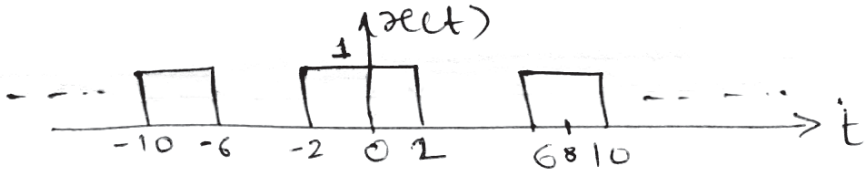

c) A signal $x[n] = \left(\frac{1}{2}\right)^n u(n)$. Check whether $x[n]$ is energy or power and accordingly find its appropriate value. **[4]**

d) If $x(t)$ is given by **[3]**

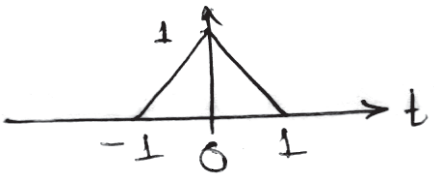

and $h(t)$ i.e impulse response by $h(t) = \sum_{k=-\infty}^{\infty} \delta(t - 2k)$

Find and sketch the output response of the system.

P.T.O.

OR

Q2) a) A signal $x(t)$ is given by **[3]**

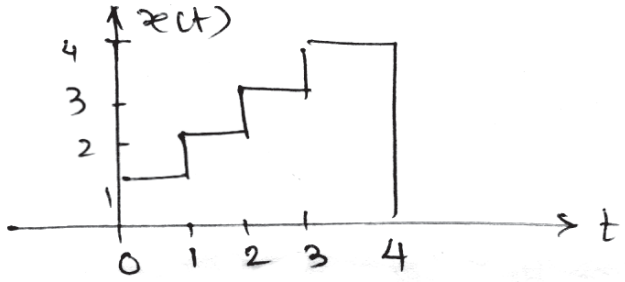

Find Energy of the signal

b) Check whether the following signals are periodic or Aperiodic and find period of the signal if periodic **[4]**

i) $x(t) = [\cos(4\pi t)]^2$

ii) $x[n] = \cos(100\, n)$

c) Find the step response of the LTI system whose impulse response is given by **[3]**

$$h[n] = \left(\frac{1}{2}\right)^n u(\mathrm{n})$$

d) Check whether the following system whose impulse response is

$h(t) = e^{2t}\, u(-t)$

Static, causal and stable and justify. **[3]**

Q3) a) Find the trignometric Fourier series of the signal $x(t)$ shown in figure. **[4]**

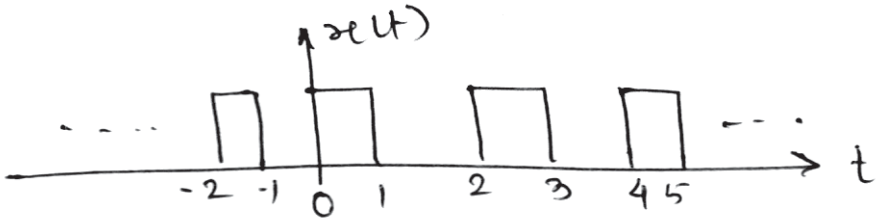

b) Find the Fourier transform of the following signal. Also sketch magnitude and phase spectrum. **[6]**

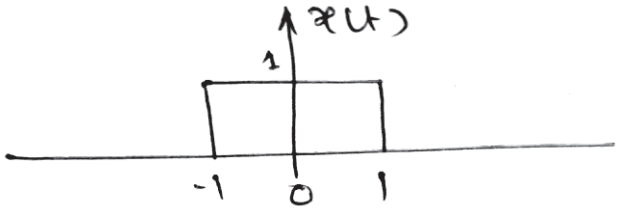

c) Compare Fourier series and Fourier transform. **[2]**

OR

Q4) a) Find Fourier transform of the following signal. **[4]**

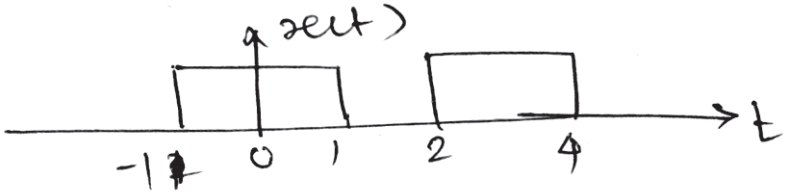

b) Find exponential Fourier series of the signal shown in following figure. Also sketch magnitude and phase spectrum. **[6]**

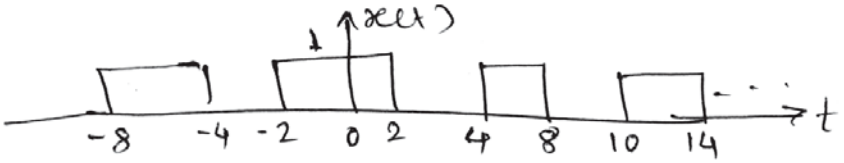

c) Compare trigonometric and exponential Fourier series. **[2]**

Q5) a) Find the impulse response of the following system **[4]**

$$H(S) = \frac{10}{S^2 + 6S + 10}$$

b) Using the Laplace transform find the impulse response of an LTI system described by differential equation **[3]**

$$\frac{d^2y(t)}{dt^2} - \frac{dy(t)}{dt} - 2y(t) = x(t)$$

c) Find initial and final value of the following signals **[6]**

i) $X(S) = e^{-5S}\left(\frac{-2}{S(S+2)}\right)$ ii) $X(S) = \frac{2S+3}{S^2+5S+6}$

OR

Q6) a) Find the Laplace transform of **[4]**

$$x(t) = \frac{d^2}{dt^2}\left[e^{-3(t-2)}u(t-2)\right]$$

If initial conditions are zero

b) Find the inverse bilateral Laplace transform of **[6]**

$$X(S) = \frac{-5S-7}{(S+1)(S-1)(S+2)}, \text{ if}$$

i) Roc ; $-1 < Re(S) < +1$ ii) Roc ; $-2 < Re(S) < -1$

c) State the dirichlet conditions for existence of ϕ Laplace transform. **[3]**

Q7) a) Consider a pair of dice. Find the probability of getting sum of the faces as **[3]**

i) less than 6

ii) equal to 10

iii) greater than or equal to 10

b) A random variable has a distribution function given by **[4]**

$f_x(x) = 0 \quad ; -\infty \le x \le -10$

$= 1/6 \quad ; \quad -10 \le x \le -5$

$= \frac{x}{15} + \frac{1}{2} \quad ; \quad -5 < x < 5$

$= 5/6 \quad ; \quad 5 \le x < 10$

$= 1 \quad ; \quad 10 \le x < \infty$

i) Draw CDF

ii) Find P ($x \le 4$)

iii) Find P ($-5 \le x \le 4$)

iv) Find P ($-5 \le x \le 11$)

c) The PDF of random variable is given by **[5]**

$f_x(x) = 2(1-x)^2 \quad ; 0 \le x < 1$

$= 0 \quad ;$ else

Find

i) Mean value

ii) Variance

iii) E[$2x + 3$]

iv) E[$6x + 3x^2$]

v) Std. deviation

OR

Q8) a) Consider a box with five 100Ω resistor and two 1000Ω resistors. We remove two resistors in succession. What is the probability that the first resistor is 100Ω and the second resistor is 1000Ω. **[3]**

b) State and explain properties of PDF. **[4]**

c) A coin is tossed 4 times. Write the sample space which gives all possible outcomes. A random variable X, which represents the number of heads obtained during each event. Draw the mapping of S on real line. Find the probability of Random variable X and plot C.D.F. **[5]**

▽▽▽▽

Total No. of Questions : 8]

SEAT No. :

P3901

[Total No. of Pages : 2

[5869]-442

S.E. (E&TC/Electronics) (204182)

ELECTRONIC DEVICES AND CIRCUITS

(2015 Pattern) (Semester - I)

Time : 2 Hours] *[Max. Marks : 50*

Instructions to the candidates :

1) ***Solve Q.1 or Q.2, Q.3 or Q.4, Q.5 or Q.6, and Q.7 or Q.8.***
2) ***Neat diagrams must be drawn wherever necessary.***
3) ***Use of logarithmic tables, slide rule, electronic pocket calculator is allowed.***
4) ***Assume suitable data, if necessary.***

Q1) a) Draw and explain the VI characteristics of E-MOSFET. **[6]**

b) For the circuit shown in figure 1. Calculate I_{DQ}, V_{DSQ} and V_D. **[6]**

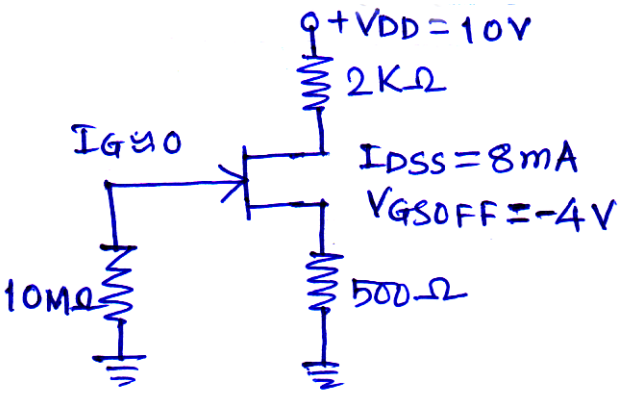

OR

Q2) a) Explain frequency response of JFET amplifier with neat circuit diagram and frequency response curve. **[6]**

b) Draw the common source E-MOSFET amplifier and explain its modes of operation in detail with equation. **[6]**

P.T.O.

Q3) a) Draw and explain the small signal model for the MOSFET. Define the different parameters in that model. **[6]**

b) Explain the MOSFET as Active resistor with suitable diagram. **[6]**

OR

Q4) a) What is channel length modulation. Explain the effect of W/L ratio on the drain current of N-MOSFET. **[6]**

b) Write a short note on "MOSFET as Current mirror circuits". **[6]**

Q5) a) Draw and explain the different feedback topologies. **[8]**

b) Draw and explain the RC phase shift oscillator with operating frequency equation. **[5]**

OR

Q6) a) Differentiate on any three between voltage series feedback and current series feedback. **[6]**

b) In a voltage series negative feedback amplifier with $\beta = 0.01$, calculate Avf, Rif, Rof if open loop voltage gain Av = 150, Ri = 10 KΩ, Ro = 500Ω. **[7]**

Q7) a) Explain drop out voltage, line regulation, load regulaion in voltage regulators. **[6]**

b) Design an adjustable voltage regulator using LM 317 for output voltage 5-15V, Io = 1 Amp. Draw the typical connection diagram. Assume : RI = 240 Ω and Iadj. = 100uA. **[7]**

OR

Q8) a) Draw block diagram of SMPS and explain its operation. **[8]**

b) Compare 3-terminal regulator LM317 and SMPS. **[5]**



Total No. of Questions : 8]

SEAT No. :

P3902

[Total No. of Pages : 2

[5869]-443

S.E. (E&TC / Electronics)

ELECTRICAL CIRCUITS AND MACHINES

(2015 Pattern) (Semester - I) (204183)

Time : 2 Hours] *[Max. Marks : 50*

Instructions to the candidates :

1) ***Answer Q1 or Q2, Q3 or Q4, Q5 or Q6, Q7 or Q8.***
2) ***Figures to the right indicate full marks.***
3) ***Draw neat diagrams wherever necessary.***
4) ***Use of non-programmable electronics pocket calculator is allowed.***
5) ***Assume suitable data, if necessary.***

Q1) a) Using Thevenin's theorem finds current ZL, From the circuit shown in the following fig **[6]**

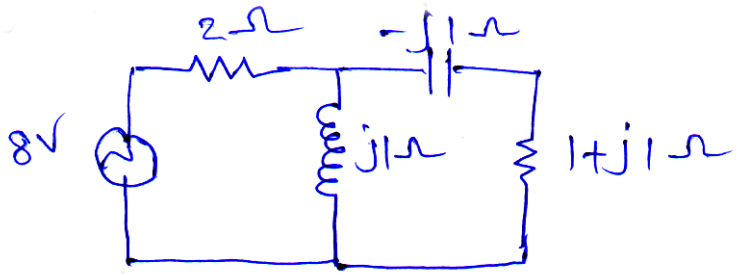

b) Explain the various losses in transformer? Explain How to minimize them. **[6]**

OR

Q2) a) A 25 KVA, 230/500V,single phase transformer give **[6]**

i) O.C test-230V, 5A , 200W

ii) S.C test-6V, I00A, 180W

Calculate the efficiency and regulation on full load & 0.8 P.F lagging.

b) State and Explain Superposition theorem and Nortan's theorem. **[6]**

P.T.O.

Q3) a) Explain with neat construction diagram of a D.C machine. List the various parts statin the function of any two. **[6]**

b) Explain the construction of three phase induction motor. **[6]**

OR

Q4) a) A three-phase, 4 pole, 75 kW, 600 V, 60 Hz induction motor runs at 1763 RPM on full load. The stator losses are 5kW and mechanical losses are 1.2 kW. Calculate: i) Rotor copper loss per phase ii) Mechanical power developed and iii) Efficiency of motor. **[6]**

b) Explain and Draw characteristics of D.C shunt motor. **[6]**

Q5) a) Explain the construction and working of three phase Synchronous motor? List the methods of starting Synchronous motor. **[7]**

b) Distinguish between brushless D.C motor and conventional D.C motor.**[6]**

OR

Q6) a) Explain the working, characteristics and application of Universal motor.**[7]**

b) Comparison of Synchronous and Induction motor. **[6]**

Q7) a) What is a stepper motors? Explain any one type in detail. **[6]**

b) Explain the construction, working, characteristics and application of AC servomotor. **[7]**

OR

Q8) a) Describe the principle of operation of single phase split phase split type induction motor along with torque-speed characteristics. Draw the circuit and phasor diagram. State its application. **[6]**

b) Comparison Between Variable reluctances stepper motor and Permanent magnet stepper motor. **[7]**



Total No. of Questions : 8]

SEAT No. :

P3903

[Total No. of Pages : 3

[5869]-444

S.E. (Electronics/E&TC)

DATA STRUCTURE AND ALGORITHMS

(2015 Pattern) (Semester - I) (204184)

Time : 2 Hours] *[Max. Marks : 50*

Instructions to the candidates :

1) ***Neat diagrams must be drawn wherever necessary.***
2) ***Figures to the right indicate full marks.***
3) ***Assume suitable data, if necessary.***

Q1) a) Illustrate the parameters with suitable example. **[6]**

i) call by value

ii) call by reference

b) Sort the following numbers using bubble sort. Show all the steps & discuss time complexity.

20 15 14 5 18 6 **[6]**

OR

Q2) a) What do you mean by recursive function? Write a program to find factorial of a number. **[6]**

b) Define binary search. Explain with suitable example. **[6]**

Q3) a) Define stack. Write push and pop functions in C to implement stack using array. **[7]**

b) Differentiate Static Memory Allocation & Dynamic Memory Allocation.**[6]**

OR

P.T.O.

Q4) a) Write short note on circular queue. Compare it with linear queue. **[7]**

b) What is doubly linked list? Write Pseudo code to delete a node from DLL. **[6]**

Q5) a) Define the following terminologies : **[6]**

i) Complete Binary Tree

ii) Siblings

iii) Non terminal nodes

iv) Forest

v) Root node/Root

vi) Height/Depth of Tree

b) Write inorder, preorder & postorder traversals for the following tree. **[6]**

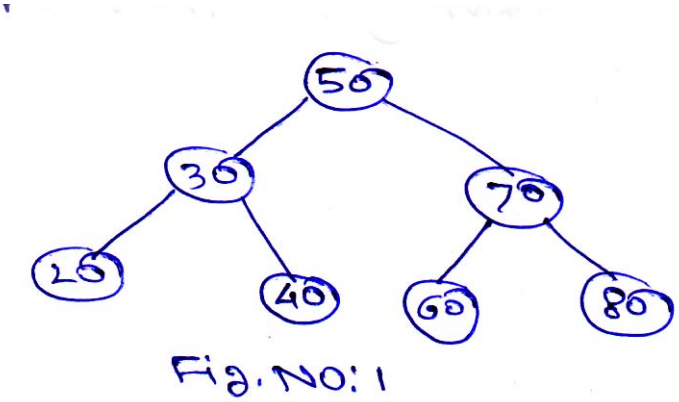

Fig. NO: 1

OR

Q6) a) Write a C function to insert a node in a Binary Search Tree. **[6]**

b) With suitable example, explain how BST is represented using array and linked list. **[6]**

Q7) a) Define the term graph. With the help of suitable example, give adjacency matrix and adjacency list representation of the graph. **[7]**

b) Construct minimum spanning tree using Prim's algorithm, consider A as a starting vertex. **[6]**

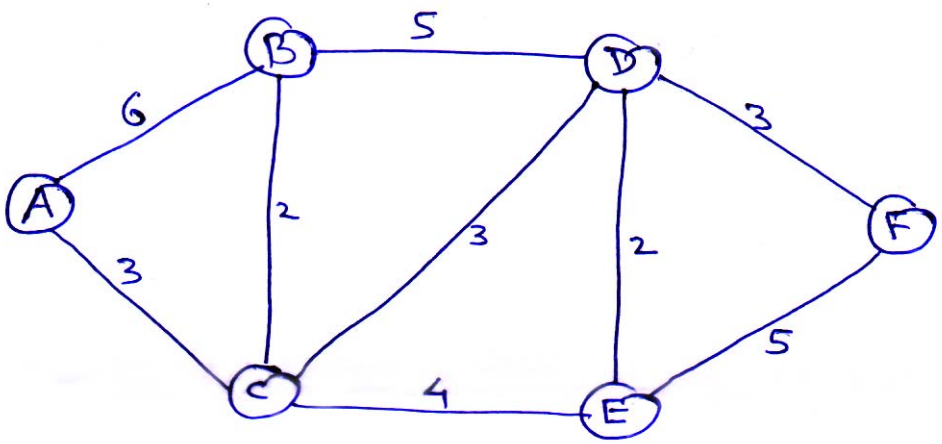

Fig. No: 2

OR

Q8) a) Define the term spanning tree. What is minimum spanning tree? Explain Kruskal's algorithm to find minimum spanning tree with suitable example. **[7]**

b) Explain Dijktra's shortest path Algorithm with suitable example. **[6]**

Total No. of Questions : 8]

SEAT No. :

P6800

[Total No. of Pages : 2

[5869]-445
S.E. (E & TC) (Electronics)
DIGITAL ELECTRONICS
(2015 Pattern) (Semester - I) (204185)

Time : 2 Hours] *[Max. Marks : 50*

Instructions to the candidates :

1) ***Answer Q. No. 1 or Q. No. 2, Q. No. 3 or Q. No. 4, Q. No. 5 or Q. No. 6, Q. No. 7 or Q. No. 8.***
2) ***Neat diagrams must be drawn wherever necessary.***
3) ***Figures to the right indicates full marks.***
4) ***Use of calculator is allowed.***
5) ***Assume suitable data, if necessary.***

Q1) a) Draw and Explain 4:1 MUX- block diagram, truth table, working and logic diagram using basic gates. **[6]**

b) Explain T flip flop with neat Block diagram, truth table. **[4]**

c) Compare Encoder and Decoder. **[2]**

OR

Q2) a) Define K-map with example. **[4]**

b) Design 3- bit parity generator circuit. **[5]**

c) Explain look ahead carry generator circuit. **[3]**

Q3) a) Design the sequential circuit for the given state diagram using D flip flop. **[6]**

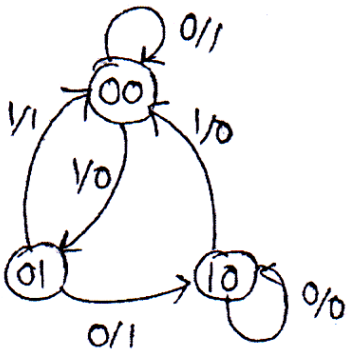

b) Explain with neat diagram 2 input CMOS INVERTER gate. **[6]**

P.T.O.

OR

Q4) a) Explain the following characteristics of digital IC's : **[6]**

i) Fan out

ii) Noise Immunity

iii) Propagation delay

b) Write short note on state diagram and state table with suitable example. **[6]**

Q5) a) Differentiate between ROM and RAM? **[7]**

b) Illustrate the features of a ROM cell? **[6]**

OR

Q6) a) Design and implement Full Subtractor using PAL? **[7]**

b) Explain FPGA architecture. **[6]**

Q7) a) Explain memory organization of 8051 microcontroller. **[5]**

b) Draw and Explain block diagram of 8051 in detail. **[5]**

c) Explain following instructions of 8051. **[3]**

i) ADD A,B

ii) DIV AB

iii) JNZ

OR

Q8) a) Write short note on internal memory organization of 8051. **[5]**

b) Draw and Explain Timer counter of 8051 in detail. **[5]**

c) Explain following pins of 8051. **[3]**

i) EA

ii) RXD

iii) TXD

Total No. of Questions : 8]

SEAT No. :

P3904

[Total No. of Pages : 2

[5869]-447
S.E. (Information Technology)
COMPUTER GRAPHICS
(2015 Pattern) (214450) (Semester - II)

Time : 2 Hours] ***[Max. Marks : 50***

Instructions to the candidates:

1) ***Neat diagrams must be drawn wherever necessary.***
2) ***Figures to the right indicate full marks.***
3) ***Assume suitable data, if necessary.***

Q1) a) Explain the algorithm to draw a line using DDA. Use this algorithm to rasterize the line whose end points are (1,0) and (5,7) **[6]**

b) Define the terms : **[6]**

i) Scan Conversion

ii) Line Segment

iii) Frame Buffer

iv) Pixel

v) Vector Generation

vi) Line

OR

Q2) a) Explain Scan line polygon filling Algorithm? **[6]**

b) What is 2D rotation of an object about an arbitrary point? Describe in detail? **[6]**

Q3) a) Explain 3D rotation about X, Y, Z axix with diagram. **[6]**

b) Explain with example Midpoint subdivision method. **[6]**

OR

P.T.O.

Q4) a) What is orthographic projection? Explain any two types of orthographic projection. **[6]**

b) What is Segment? What is the procedure for renaming of segment? **[6]**

Q5) a) Write down the steps required to shade an object using Phong Shading. Compare Phong shading with Gouraud Shading. **[7]**

b) Explain different Computer Animation Languages with example. **[6]**

OR

Q6) a) Draw and Explain block diagram of i860 microprocessor. **[7]**

b) Explain Open GL with respect to Open GL operations. **[6]**

Q7) a) Explain how B-spline differentiates from Bezier? Also write the properties of Bezier and B-spline curves. **[7]**

b) Define fractals with examples. Give various categories in which fractals are classified. **[6]**

OR

Q8) a) Explain Bezier curve generation using midpoint subdivision. **[7]**

b) Explain in detail procedure for fractal lines and surfaces. **[6]**

❄ ❄ ❄

Total No. of Questions : 8]

SEAT No. :

P3905

[Total No. of Pages : 2

[5869]-448
S.E. (IT)
PROCESSOR ARCHITECTURE AND INTERFACING
(2015 Pattern) (Semester - II) (214451)

Time : 2 Hours] ***[Max. Marks : 50***

Instructions to the candidates:

1) ***Answer Q.1 or Q.2, Q.3 or Q.4, Q.5 or Q.6, Q.7 or Q.8.***
2) ***Neat diagrams must be drawn wherever necessary.***
3) ***Figures to the right indicate full marks.***
4) ***Assume suitable data, if necessary.***

Q1) a) What is the significance of the following pins of 80386 microprocessor : **[6]**

HOLD HLDA NMI

b) Explain physical address generation mechanism in Real mode operation of 80386 microprocessor. **[6]**

OR

Q2) a) Draw and Explain architecture of 80386 microprocessor. **[6]**

b) Explain significance of GDT and IDT with suitable diagram. **[6]**

Q3) a) State any four features of 8051 microcontroller. **[2]**

b) Draw and Explain PSW of 8051 microcontroller. **[4]**

c) Explain with diagram the linear to physical address translation mechanism of 80386 microprocessor when paging is enabled. **[6]**

OR

Q4) a) Explain internal memory organization of 8051 microcontroller. **[6]**

b) How 80386 performs task switching operation? Explain with diagram. **[6]**

P.T.O.

Q5) a) Draw interrupt structure of 8051 and Explain the same. Enlist the interrupts of 8051 with vectored addresses. **[6]**

b) List operating modes of Timer of 8051 and Explain any two of them. **[7]**

OR

Q6) a) Explain any 3 of the following : **[6]**

TB8 RB8 TI RI REN

b) Explain significance of TMOD & TCON registers with format. **[7]**

Q7) a) Draw & Explain I/O mode & BSR mode control word formats of PPI 8255. **[7]**

b) Draw interfacing diagram of DAC with 8051. Write ALP to generate triangular wave. **[6]**

OR

Q8) a) Explain external memory of size 64 kB (both program & data) interfacing with 8051. **[6]**

b) Explain ADC interfacing with 8051. Explain significance of any 2 interfacing control signals. **[7]**

❄ ❄ ❄

Total No. of Questions : 8]

SEAT No. : ____

P3906

[Total No. of Pages : 3

[5869]-449

S.E. (I.T.)

DATA STRUCTURES AND FILES

(2015 Pattern) (Semester - II) (214452)

Time : 2 Hours] ***[Max. Marks : 50***

Instructions to the candidates:

1) ***Answer four questions.***
2) ***Neat diagrams must be drawn wherever necessary.***
3) ***Figures to the right indicate full marks.***
4) ***Assume suitable data, if necessary.***

Q1) a) Define circular queue. Explain the advantages of circular queue over linear queue. **[6]**

b) Construct a binary tree from the given traversals. **[6]**

Preorder : ABCDEFGHI

Inorder : BCAEDGHFI

OR

Q2) a) Convert the following infix expression to prefix. Clearly indicate the contents of stack. A/B-C+D*E-A*C **[6]**

b) For the graph given below, show stepwise representation of MST using Prim's algorithm. What is the total cost of obtained MST? **[6]**

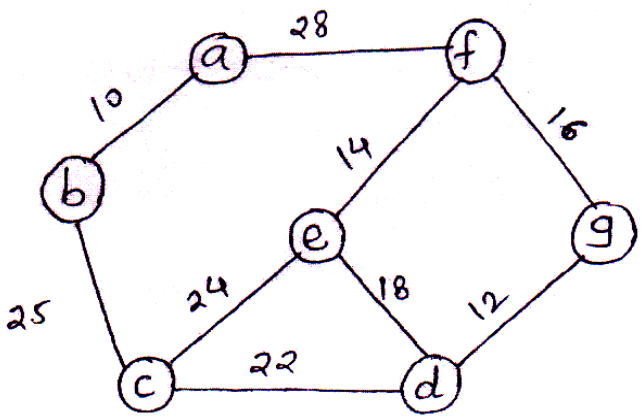

P.T.O.

Q3) a) Construct OBST for the given data. **[8]**

N = 3, (al, a2, a3) = (do, if, while)

p(1:3) = (4, 2, 1), q(0:3) = (2, 3, 1, 5)

b) What is Hash table? What are the characteristics of good hash function? **[4]**

OR

Q4) a) Write a short note on Topological sorting. **[4]**

b) Draw the Huffman tree for the given data set and find the corresponding Huffman codes. **[8]**

Data	A	B	C	D	E	F	G
Weight	37	18	29	13	30	17	6

Q5) a) Construct an AVL search tree by inserting one data elements at a time in the following sequence : **[8]**

15, 20, 24, 10, 13, 07, 30, 36, 25

Show the balance factor and Label the rotations appropriately at each step.

b) Write a pseudo code for preorder traversal of threaded binary tree. **[6]**

OR

Q6) a) Build a B-Tree of order 4 for the following data. **[8]**

5, 3, 21, 9, 1, 13, 2, 7, 10, 12, 4, 8.

b) Write a short note on : **[6]**

i) Splay Trees

ii) B+Trees

Q7) a) Write C++ program to perform the following operations on sequential file : **[6]**

i) Create record

ii) Insert record

iii) Display record

b) With prototype explain the inbuilt functions in C language for following operations. **[6]**

i) Opening file

ii) Reading character form file

iii) Writing character into file

OR

Q8) a) Explain primitive operations on index sequential file in detail. **[6]**

b) What is file? Compare Binary files and Text files. **[6]**

❄ ❄ ❄

Total No. of Questions : 8]

SEAT No. : ____

P3907

[Total No. of Pages : 2

[5869]-450

S.E. (IT)

214453 : FOUNDATIONS OF COMMUNICATION & COMPUTER NETWORK

(2015 Pattern) (Semester - II)

Time : 2 Hours] ***[Max. Marks : 50***

Instructions to the candidates:

1) ***Answer four questions.***
2) ***Neat diagrams must be drawn wherever necessary.***
3) ***Figures to the right indicate full marks.***
4) ***Assume suitable data, if necessary.***

Q1) a) List the layers in TCP/IP protocol suite. Also list the functions of IP & TCP layers. **[6]**

b) Find the carrier & modulating frequencies modulation index, maximum deviation of the FM represented by $V = 12 \sin (5\times10^{9}t + 6 \cos 2500\ t)$ **[6]**

OR

Q2) a) List the layers of ISO-OSI model. List the functions of transport, session & presentation layers. **[6]**

b) In amplitude modulation, if carrier frequency is 200 KHz, modulating signal is 25 KHz, find side band frequencies & total bandwidth. **[6]**

Q3) a) Draw waveforms for ASk, FSk & PSk if digital data is 1010. **[6]**

b) Explicate Go back N protocol w.r.t sliding window concept & various cases such as successful frame transmission, frame either lost or damaged, frame received without errors but Ack lost etc. **[6]**

OR

P.T.O.

Q4) a) Explain PAM, PPM & PWM using waveforms. Also draw schematic of how they are generated. **[6]**

b) Generate CRC for 111100 using divisor 1101. **[6]**

Q5) a) Elucidate CDMA with schematic. **[6]**

b) Describe FDM with the help of wave forms, block schematic of FDM MUX & DEMUX applications. **[7]**

OR

Q6) a) What is spread spectrum? What is its use? Explain DSSS with schematic. **[6]**

b) What is meant by controlled access? Describe all its three types with suitable diagrams. **[7]**

Q7) a) Draw the frame format of Ethernet (IEEE802.3) & Explain each field in it. **[6]**

b) Write in brief about 10 Base 5 & 10 Base 2 with diagrams, media, maximum length, encoding, topology & applications. **[7]**

OR

Q8) a) Describe packet switching network with the help of schematic, efficiency, delay & application. **[6]**

b) Draw & Explain the token ring with the help of frame format. **[7]**

❄ ❄ ❄

Total No. of Questions : 8]

SEAT No. : ____

P3908

[Total No. of Pages : 2

[5869]-451

S.E. (IT)

214442 : COMPUTER ORGANIZATION AND ARCHITECTURE

(2015 Pattern) (Semester - I)

Time : 2 Hours] ***[Max. Marks : 50***

Instructions to the candidates:

1) ***Answer Q.1 or Q.2, Q.3 or Q.4, Q.5 or Q.6, Q.7 or Q.8.***
2) ***Figures to the right indicate full marks.***

Q1) a) Explain MIPS, Amdahl's Law, MFLOPS. **[6]**

b) Multiply +7 and +3 using booths Algorithm. **[6]**

OR

Q2) a) Perform the Division using restoring method Divident = 12, Divisor = 03. **[6]**

b) Explain any four addressing modes. **[6]**

Q3) a) Explain single Bus Processor organisations with diagram. **[7]**

b) Which are the different instruction cycle states of a processor? Explain. **[6]**

OR

Q4) a) Consider a memory hierarchy with the following details. **[7]**

Number of main memory block = 16 Number of cache memory block = 4 Block size = 4 Direct mapping cache. Show the content of tags if the following blocks are stored in cache memory B3, B5, B8, B11.

b) Write Difference between hard wired control unit and microprogram control unit. **[6]**

Q5) a) Explain three pipeline hazards. **[6]**

b) Explain stages in instruction pipeline. **[6]**

OR

P.T.O.

Q6) a) Draw and Explain superscalar processor. **[6]**

b) Explain Events of Fetch Cycle of MIPS. **[6]**

Q7) a) Draw and Explain Flynn's Taxonomy for multiple processor organisation. **[7]**

b) Define multithreading? Explain its various types with suitable diagrams. **[6]**

OR

Q8) a) Explain closely coupled and Loosely coupled Microprocessor system. **[7]**

b) Write a short note on cluster configuration. **[6]**

❄ ❄ ❄

Total No. of Questions : 8]

SEAT No. :

P3909

[Total No. of Pages : 2

[5869] - 452

S.E. (Information Technology)

DIGITAL ELECTRONICS AND LOGIC DESIGN

(2015 Pattern) (Semester - I) (214443)

Time : 2 Hours] *[Max. Marks : 50*

Instructions to the candidates :

1) ***Answer Q.1 or Q.2, Q.3 or Q.4, Q.5 or Q.6, Q.7 or Q.8.***
2) ***Neat diagrams must be drawn wherever necessary.***
3) ***Figures to the right indicate full marks.***
4) ***Assume suitable data if necessary.***

Q1) a) Compare TTL and CMOS families. **[6]**

b) Design full adder circuit using Decoder IC74138. **[6]**

OR

Q2) a) Convert the following numbers into its equivalent hexadecimal, decimal and binary number (show step by step process of conversion). **[6]**

i) $(357.2)_8$.

ii) $(457.54)_8$.

b) Design and Draw Excess-3 adder using IC 7483 with example. **[6]**

Q3) a) Design a sequence generator to generate binary sequence 0101011 using JK-flip-flop. **[7]**

b) Draw & explain internal architecture of IC 7490. Design mod 50 counter using IC 7490. **[6]**

OR

Q4) a) Design and implement synchronous counter for 0-2-4-6-7-0 states using J-K flip-flops, avoid lock out condition. **[7]**

b) Draw and explain working of 4-bit bidirectional shift register with function table. **[6]**

P.T.O.

Q5) a) Design BCD to Excess 3 code converter using suitable PLD. **[6]**

b) Explain with diagram the basic architecture of FPGA. **[6]**

OR

Q6) a) Implement following function using PROM **[6]**

$F_1 (A, B, C) = \sum m\ (0, 3, 4, 7)$

$F_2 (A, B, C) = \sum m\ (1, 2, 5, 7)$

b) What are components of ASM chart? Draw ASM Chart for 3 bit Up/ Down Counter. **[6]**

Q7) a) Explain VHDL modeling styles with example. **[6]**

b) What is VHDL? Define Entity and architecture for full subtractor using structural modeling. **[7]**

OR

Q8) a) Explain the difference between concurrent and sequential statements with example. **[6]**

b) Explain the data objects constant, variable and signal in VHDL with example. **[7]**



Total No. of Questions : 8] **SEAT No. :**

P3910 **[Total No. of Pages : 2**

[5869] - 453

S.E. (Information Technology)

FUNDAMENTALS OF DATA STRUCTURES

(2015 Pattern) (Semester - I) (214444)

Time : 2 Hours] ***[Max. Marks : 50***

Instructions to the candidates :

1) ***Answer Q.1 or Q.2, Q.3 or Q.4, Q.5 or Q.6, Q.7 or Q.8.***
2) ***Neat diagrams must be drawn wherever necessary.***
3) ***Figures to the right side indicate full marks.***
4) ***Assume suitable data if necessary.***

Q1) a) Discuss with illustrations control flow structures in C. **[6]**

b) Write a C-pseudocode to perform multiplication of two matrices using pointers. **[6]**

OR

Q2) a) Discuss different ways of classification of Data structures and give examples for each. **[6]**

b) Demonstrate the use of following with examples **[6]**

i) Structure.

ii) Union.

Q3) a) Identify the need of Time Complexity. Illustrate with example steps of Time-Complexity Computation of an algorithm. **[6]**

b) Sort the following numbers in ascending order using insertion sort. Show all passes.

90, 87, 76, 65, 43, 32, 19, 7, 0, –17 **[6]**

OR

Q4) a) Explain the following terms with example **[6]**

i) Sort stability.

ii) Internal sort.

iii) External sort.

b) What is ADT? Explain array as an ADT. **[6]**

P.T.O.

Q5) a) Identify the need of Dynamic memory allocation Demonstrate with an example how it's implemented in C-language. **[8]**

b) Enlist any two applications of sparse matrix, write a C-pseudo code to find simple transpose of sparse matrix. **[6]**

OR

Q6) a) Illustrate with an example, address calculation of 2-D array element for row major and column major representations. **[8]**

b) Demonstration polynomial representation using an array and write pseudocode to perform addition of two polynomials. **[6]**

Q7) a) Identify the need of Generalized linked and represent the following polynomial using GLL $7x^4 - 5x^3 + 8xy - 9xy^3 + 20x^2y^4$. **[6]**

b) Discuss the need of linked representation of lists and write pseudo-code to reverse physically a list (singly-linked-list). **[6]**

OR

Q8) a) Enlist advantages of circular linked lists over non circular linked lists and write a C-code to delete a specified node from doubly linked list. **[6]**

b) Write a pseudo-code to merge two sorted linked lists into third. **[6]**



Total No. of Questions : 8] **SEAT No. :**

P3911 **[Total No. of Pages : 2**

[5869] - 454

S.E. (Information Technology)

PROBLEM SOLVING AND OBJECT ORIENTED PROGRAMMING

(2015 Pattern) (Semester - I) (214445)

Time : 2 Hours] ***[Max. Marks : 50***

Instructions to the candidates :

1) ***Answer Q.No.1 or Q.No.2, Q.No.3 or Q.No.4, Q.No.5 or Q.No.6, Q.No.7 or Q.No.8.***
2) ***Neat diagrams must be drawn wherever necessary.***
3) ***Figures to the right indicate full marks.***
4) ***Assume suitable data if necessary.***

Q1) a) What is difference in between Expression and Equation? **[6]**

Evaluate the following for the values of A = 5, B = 3 and C = 2. Include order of processing.

i) M = (A * A + B* B + 3*C)/(B + A).

ii) X = pow(A, 2) * (B * C)/(A* C).

b) Write note of any 3 of the following : **[6]**

i) Parameter passing.

ii) Return value.

iii) Local and global variable.

iv) Sequential logic structure.

OR

Q2) a) Write a note on : **[6]**

i) Testing the solution.

ii) Top down design.

b) What is cohesion and coupling? Why are cohesion and coupling important to programmers? **[6]**

Q3) a) Explain the characteristics of C++ in details. **[6]**

b) What is Inheritance? Explain the concept of Hierarchical inheritance with suitable example. **[6]**

OR

P.T.O.

Q4) a) Explain the order of invocation of constructors and destructors in multilevel destructors. **[6]**

b) How memory management is carried out in C++? Explain it with suitable example. **[6]**

Q5) a) Write a C++ program for stack operation push(), pop() and display stack element using class templates. **[6]**

b) Write C++ code for following algorithm. **[7]**

i) Declare the base class Base. Declare and define the virtual function show().

ii) Declare and define the function display().

iii) Create the Derived class from the base class.

iv) Declare and define the functions display() and show().

v) Create the base class object and pointer variable.

vi) Call the functions display() and show() using the base class object and pointer.

vii) Create the derived class object and call the functions display() and show() using the derived class object and pointer.

OR

Q6) a) What is Template? Write a C++ program for Bubble sort using Function template. **[7]**

b) Define : **[6]**

i) Abstract Base Class.

ii) Static/Early Binding with example.

iii) Dynamic/Late Binding with example.

Q7) a) What is exception handling mechanism in C++? Write a program in C++ to handle 'divide by zero' exception. **[6]**

b) How to manage console I/O operation in C++? Explain with example. **[7]**

OR

Q8) a) Write C++ program to write student information from file and read it. **[6]**

b) What is namespace? Explain rules of namespace. **[7]**



Total No. of Questions : 8] **SEAT No. :**

P3912 **[Total No. of Pages : 3**

[5869] - 455

S.E. (Information Technology)

DISCRETE STRUCTURES

(2015 Pattern) (Semester - I) (214441)

Time : 2 Hours] ***[Max. Marks : 50***

Instructions to the candidates :

1) ***Solve Q.1 or Q.2, Q.3 or Q.4, Q.5 or Q.6, Q.7 or Q.8.***
2) ***Neat diagrams must be drawn wherever necessary.***
3) ***Figures to right side indicate full marks.***
4) ***Assume suitable data if necessary.***

Q1) a) How many different ways are there to choose a dozen donuts varieties from 21 varieties at a donut shop? **[6]**

b) Construct the truth table : **[6]**

$(p \wedge q) \vee (\sim p \wedge q \wedge r) \vee q$.

OR

Q2) a) In how many different license plates are available if each plate contains a sequence of 2 letters followed by 4 digits? **[6]**

b) During a survey of the ice cream preferences of students, it was found that 22 like mango, 25 like custard apple, 39 like grape, 9 like custard apple and mango, 17 like mango and grape, 20 like custard apple and grape, 6 like all flavours and 4 like none. Then how many students were surveyed? How many students like exactly one flavour, how many students like exactly two flavours? **[6]**

Q3) a) Solve the given recurrence relation **[6]**

$a_n = a_{n-1} + 2\ a_{n-2}$

with initial condition, $a_0 = 2$ and $a_1 = 7$.

P.T.O.

b) Find the shortest path by using Dijkstra's algorithm for given figure. **[6]**

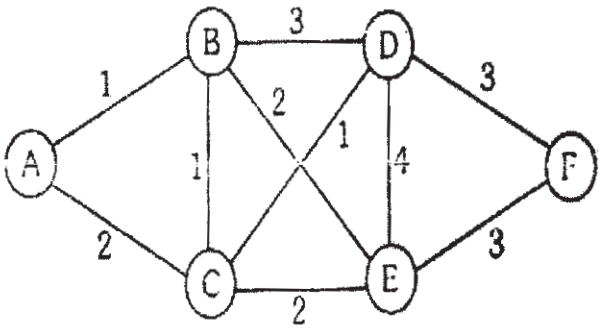

OR

Q4) a) Draw the Hasse diagram for given POSET

A = {1, 2, 3, 6, 9, 12, 16} R (A ->A) = {x , y)|x divides y}. **[6]**

b) How many nodes are necessary to construct a graph with exactly 8 edges in which each node is of degree 2. Draw such a graph. **[6]**

Q5) a) Find the minimum cost spanning tree of the following graph using Prim's algorithm. **[7]**

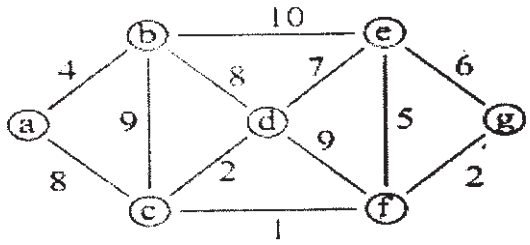

b) 19 lamps are to be connected to a single electrical outlet, using extension cords, each of which has 4 outlets. Find the number of extension cords needed and draw corresponding tree. **[6]**

OR

Q6) a) Build a binary search tree for the words mango, banana, peach, apple, pear, coconut, strawberry and papaya using alphabetical order. **[7]**

b) Which of the following codes are prefix codes? **[6]**

i) a : 11 e : 01 t : 10 s : 00

ii) a : 0 e : 1 t : 01 s : 001

Q7) a) Let Q1 be the set of all rational numbers other than 1. Show that with operation * defined on the set Q1 by (a*b = a + b – ab) is an Abelian group. **[7]**

b) Let I be the set of all integers. For each of the following determine whether * is an associative operation or not : **[6]**

i) a*b = max (a, b).

ii) a*b = min (a + 2, b).

iii) a*b = a –2b.

iv) a*b = max (2a – b, 2 b – a).

OR

Q8) a) Let R = {0º, 45º, 90º, 135º, 180º, 225º, 270º, 315º} and * = binary operation, so that a*b is overall angular rotation corresponding to successive rotations by a and then by b. Show that (R, *) is a Group. **[7]**

b) Consider set A = {1, 3, 5, 7, ...} i.e. a set of odd positive integers. **[6]**

Determine whether A under is closed under :

i) Addition.

ii) Multiplication.



Total No. of Questions : 8] **SEAT No. :**

P3913 **[Total No. of Pages : 3**

[5869]-456
S.E. (Mechanical/Automobile)
FLUID MECHANICS
(2015 Pattern) (Semester - II) (202045)

Time : 2 Hours] ***[Max. Marks : 50***

Instructions to the candidates:

1) ***Neat diagrams must be drawn wherever necessary.***
2) ***Figures to the right indicate full marks.***
3) ***Use of logarithmic tables slide rule, Mollier charts, electronic pocket calculator and steam tables is allowed.***
4) ***Assume suitable data, if necessary.***

Q1) a) Define the following. **[6]**

i) Specific weight

ii) Specific gravity

iii) Viscosity

b) The velocity vector in a fluid flow is given by $V= 4x^3i–10x^2yj+2tk$. Find the velocity and acceleration of the fluid particle at point (2, 1, 3) at time t=1. **[6]**

OR

Q2) a) Define and explain **[6]**

i) Stream line

ii) Path line

iii) Streak line

b) A rectangular plane surface 2m wide and 3m deep lies in water in such a way that its plane makes angle of 30° with free surface of water. Determine total pressure and position of centre of pressure when upper edge is l.5m below free water surface. **[6]**

Q3) a) Derive Eulers equation for a flow along stream line and deduce the Bernoulli's equation for the same. **[6]**

P.T.O.

b) A fluid of viscosity 0.7 Pa-S and specific gravity 1.3 is flowing through a circular pipe of diameter 100 mm. The maximum shear stress at the pipe wall is 196.2 Pa. Find the following:

i) The pressure gradient $\left(\frac{\partial p}{\partial x}\right)$

ii) The average velocity

iii) Reynolds number **[6]**

OR

Q4) a) Derive an expression of velocity and shear stress distribution for a laminar flow through a pipe. **[6]**

b) A horizontal venturimeter with inlet diameter 20 cm and throat diameter 10 cm is used to measure the flow of oil of specific gravity 0.8. The discharge of oil through venturimeter is 60 lit/sec. Find the reading of oil mercury differential manometer. Take C_d= 0.98 **[6]**

Q5) a) Find the head lost due to friction in a pipe of diameter 300 mm and length 50 m through which water is flowing at velocity of 3 m/s using (i) Darcy formula (ii) Chezy's formula for which C=60.

Take kinematic viscosity = 0.01 stoke. **[7]**

b) Explain the following **[6]**

i) Weber number

ii) Reynolds number

iii) Mach number

OR

Q6) a) Define equivalent pipe and derive an expression for equivalent size (diameter) for the pipe connected in series. **[7]**

b) A syphon of diameter 200 mm connects two reservoirs having a difference in elevation of 20 m. The length of syphon is 500 m and the summit is 3 m above the water level in the upper reservoir. The length of pipe from upper reservoir to summit is 100 m. Determine the discharge through the syphon and also find pressure head at the summit. Neglect minor losses. Take the coefficient of friction, f=0.005. **[6]**

Q7) a) Write a note on Boundary layer formation for flow over a flat plate. **[7]**

b) Find

i) The displacement thickness

ii) The momentum thickness

iii) The energy thickness

For the velocity distribution in the boundary layer given by $\frac{u}{U}=\frac{y}{\delta}$, Where u is the velocity at a distance y from the plate and u=U at y = δ, where δ = boundary layer thickness. **[6]**

OR

Q8) a) i) What is Drag and lift? Explain different types of Drag on an immersed body. **[4]**

ii) Derive an expression for Displacement thickness. **[3]**

b) For the following velocity profiles determine whether the flow has separated or on the verge of separation or will attach with the surface.

i) $\frac{u}{U}=\frac{3}{2}\left(\frac{y}{\delta}\right)-\frac{1}{2}\left(\frac{y}{\delta}\right)^3$

ii) $\frac{u}{U}=2\left(\frac{y}{\delta}\right)^2-\left(\frac{y}{\delta}\right)^3$

iii) $\frac{u}{U}=-2\left(\frac{y}{\delta}\right)+\left(\frac{y}{\delta}\right)^2$ **[6]**



Total No. of Questions : 8] **SEAT No. :**

P3914 **[Total No. of Pages : 3**

[5869]-457

S.E. (Mechanical and Automobile Engineering)

ENGINEERING METALLURGY

(2015 Pattern) (Semester - II) (202049)

Time : 2 Hours] ***[Max. Marks : 50***

Instructions to the candidates:

1) ***Solve Q.No. 1 or Q.No. 2, Q.No. 3 or Q.No. 4, Q.No. 5 or Q.No. 6, Q.No. 7 or Q.No. 8.***
2) ***Figures to the right indicate full marks.***
3) ***Draw the neat sketch wherever necessary.***
4) ***Use of non-programmable electronic pocket calculator is allowed.***

Q1) a) Define the Following terms. **[4]**

i) System

ii) Phase

iii) Component

iv) Nucleation

b) Differentiate between transmission electron microscope and scanning electron microscopy. **[4]**

c) What do you mean by Widmanstatten Structure? Explain the factors responsible for it. **[4]**

OR

Q2) a) Write Hume Rothery's rule of Solid Solubility. **[4]**

b) Is Etching is essential every time ? Explain with suitable exmple. **[4]**

c) Draw a neat labelled IRON- IRON CARBIDE Equilibrium diagram? **[4]**

P.T.O.

Q3) a) Differentiate between Martempering and Austempering. **[4]**

b) What is the importance of TTTdiagrams in Heat Treatment. Processes. **[4]**

c) What are the different types of cast iron? Explain Gray cast iron microstructure. State and justify the use of Grey cast iron in one application. **[5]**

OR

Q4) a) What is Sub Zero Treatment and why is it necessary? **[4]**

b) Differentiate between Annealing and Hardening. **[4]**

c) Give the classification of surface hardening treatments and explain anyone process in detail with suitable example. **[5]**

Q5) a) What is Heat affected Zone? Explain with suitable figure. **[4]**

b) Write short not on: Super alloys. **[4]**

c) Differentiate between brass & bronze. **[4]**

OR

Q6) a) Give the classification of alloy steels. **[4]**

b) Write short notes on weld decay in stainless steels. **[4]**

c) State merits and demerits of Non-Ferrous metals over ferrous metals with examples. **[4]**

Q7) a) What is IS , AISI,SAE, and DIN **[4]**

b) Write a short note on bearing materials. State any two materials. **[4]**

c) Give Classification of Copper alloys and Explain why copper is a Suitable material for automobile radiators. **[5]**

OR

Q8) a) Explain with a neat Sketch heat treatment Cycle of high speed steel with proper reasoning. **[4]**

b) Write True or False and justify your answer (any two) **[4]**

i) 60/40 brass can be easily cold worked.

ii) Tin bronzes show pronounced Coring.

ii) Phosphor bronzes are the alloys of copper and phosphorus.

c) Explain Aluminum properties and Aluminum alloys are widely used in automobile application. **[5]**



Total No. of Questions : 8] **SEAT No. :**

P3915 **[Total No. of Pages : 3**

[5869]-458
S.E. (Mechanical/Automobile)
THEORY OF MACHINES - I
(2015 Pattern) (Semester - II) (202048)

Time : 2 Hours] ***[Max. Marks : 50***

Instructions to the candidates:

1) ***Answer Q1 or Q2, Q3 or Q 4, Q5 or Q6, Q7 or Q8.***
2) ***Neat diagrams must be drawn wherever necessary.***
3) ***Figures to the right indicate full marks.***
4) ***Use of Calculator is allowed.***
5) ***Assume Suitable data if necessary.***

Q1) a) State and explain various types of constrained motions with suitable example. **[6]**

b) In the mechanism shown in Fig. 1, find number of kinematic links, kinematic pairs and degrees of freedom. **[4]**

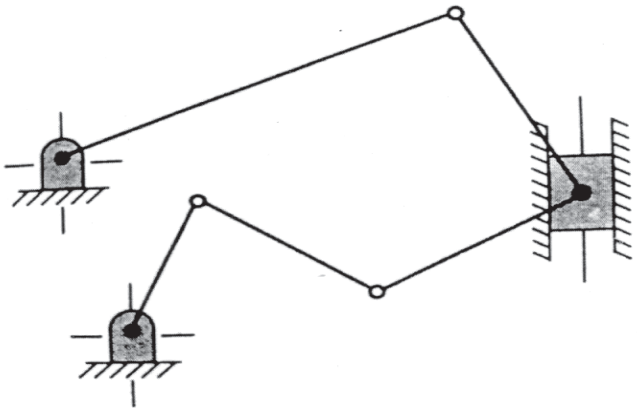

Fig. 1

OR

Q2) a) Explain dynamically equivalent system in detail. **[4]**

b) The connecting rod of an engine has length equal to 200 mm between centers and has mass equal to 3.5 kg. Its C.G. is at 80 mm from the big end centre and the radius of gyration about an axis through C.G. is 100 mm. Determine the two mass dynamically equivalent system when one mass is placed at the small end. **[6]**

P.T.O.

Q3) a) Sketch and explain Centrifugal clutch. **[4]**

b) A single plate clutch transmits 25KW at 900 rpm. The maximum pressure intensity between the plates is 85 KN/m^2. The outer diameter of the plate is 360mm. Both the sides of the plates are effective and the coefficient of friction is 0.25. Determine inner radius of plate and axial force to engage the clutch. **[6]**

OR

Q4) a) In an IC engine mechanism, the crank is 250 mm long and connecting rod is 800 mm long. The crank rotates at uniform speed of 800 rpm. When the piston has moved through 300 mm from T.D.C. position. Find velocity and acceleration of piston, angular velocity and angular acceleration of connecting rod. **[6]**

b) A Hooke's joint is used to connect two shafts which are inclined at 20° and the speed of the driving shaft is 1000rpm. Find the extreme angular velocities of the driven shaft and its maximum acceleration. **[4]**

Q5) a) What are types of acceleration? Explain them in detail. **[3]**

b) For the mechanism shown in Fig.2, the crank AB rotates at 180 rpm uniformly in clockwise direction. The dimensions of various links are as follows : AB = 150mm, BC = 450mm, CE = 240mm, CD = 210mm, Find angular acceleration of link EC. **[12]**

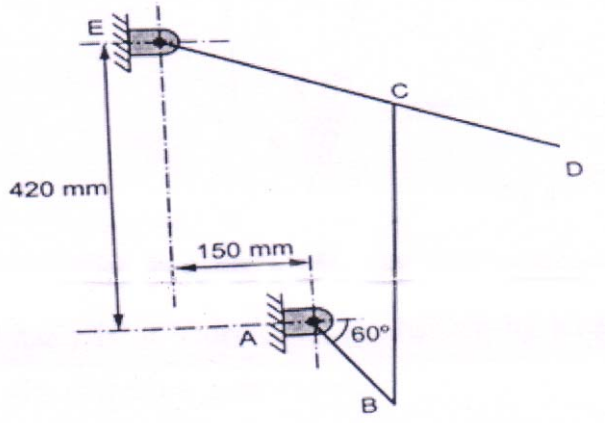

Fig.2

OR

Q6) a) What are different types of ICR? Explain each in detail. **[3]**

b) A mechanism as shown in Fig. 3, has following dimensions: OA = 200mm, AB = l.5m, BC = 600mm, CD= 500 mm and BE= 400mm. If crank OA rotates uniformly at 400 rpm anticlockwise find, velocity of B,C and angular velocities of link AB and BC using ICR method. **[12]**

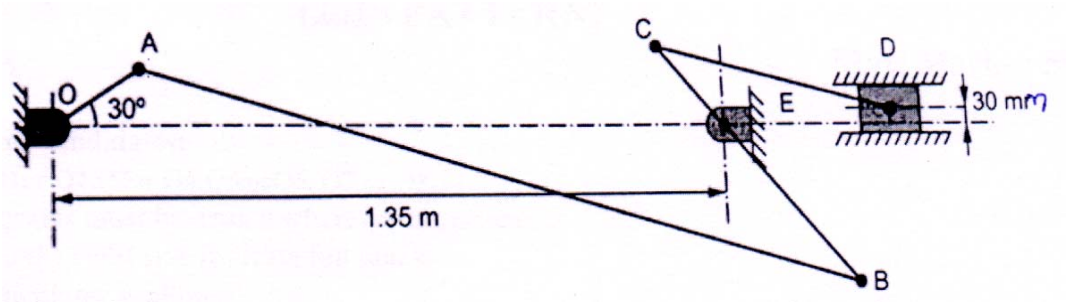

Fig.3

Q7) a) Explain velocity image principle. **[3]**

b) For the mechanism shown in Fig. 4, OA = 100 mm rotating with 18 rad/sec. Find acceleration of slider B. **[12]**

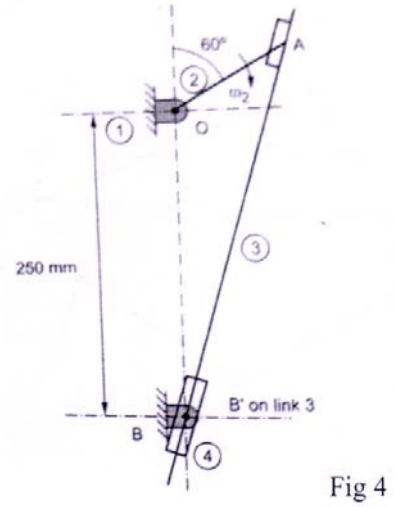

Fig 4

OR

Q8) a) Explain velocity analysis of slider crank mechanism by Klein's construction when crank is rotating with uniform angular velocity. **[4]**

b) The crank of an IC engine is 200mm long and obliquity ratio is 4. Determine the acceleration of piston, angular acceleration of connecting rod, when crank is turned through 45° from IDC and instantaneous speed of rotation of crank is 240 rpm clockwise and is increasing at a rate of 100 rad/s^2. **[11]**

Total No. of Questions : 8] **SEAT No. :**

P3916 **[Total No. of Pages : 3**

[5869]-459
S.E. (Mechanical/Automobile)
APPLIED THERMODYNAMICS
(2015 Pattern) (Semester-II) (202050)

Time : 2 Hours] ***[Max. Marks : 50***

Instructions to the candidates:

1) ***Answer 4 questions out of 8.***
2) ***Solve Q.No. 1 or Q.No. 2, Q.No. 3 or Q.No. 4, Q.No. 5 or Q.No. 6, Q.No. 7 or Q.No. 8.***
3) ***All the four questions should be solved in one answer book and attach extra supplements if required.***
4) ***Draw diagrams wherever necessary.***
5) ***Use of scientific calculator is allowed.***
6) ***Assume suitable data, if necessary.***

Q1) a) Explain valve timing diagram of 4 stroke S.I.Engine with neat sketch. **[6]**

b) Describe IC. engine classification. **[6]**

OR

Q2) a) What is difference between throttle body injection and Multipoint port fuel injection explain with neat sketch. **[6]**

b) Explain pumping loss and blow down loss with P-V Diagram. **[6]**

Q3) a) Explain delay period in C.I.Engine and factors affecting it. **[6]**

b) Derive an expression to find out indicated power of 4 cylinder S.I Engine by using Morse Test. **[6]**

OR

Q4) a) Compare knocking in SI and CI engines. **[6]**

b) The power output of a six cylinder 4 stroke engine is absorbed by a water brake for which the law is WN/20000 where the brake load W is in Newton and the speed N is in rpm. The air consumption is measured by an air box with sharp edge orifice system. The following readings are obtained:

OR

P.T.O.

Orifice diameter =30mm, Bore =100mm, Stroke=120mm, Brake load=560 N, Coefficient of Discharge = 0.6, Ambient pressure l bar, Ambient temperature = 27°C, Pressure drop across Orifice = l4.5 mm of Hg, Engine speed=2400 rpm, Time taken for 100cc of fuel Consumption20s, Fuel density=831 kg/m^3, Density of Hg = 13600 kg/m^3.

Calculate i) Brake Power (kW)

ii) Brake Torque (N-m)

iii) Fuel Consumption (kg/hr)

iv) Brake specific fuel consumption (kg/kW - hr)

v) Air consumption (kg/hr.)

[6]

Q5) a) Describe positive crank case ventilation with neat sketch. **[6]**

b) Explain dry sump lubrication with neat sketch. **[7]**

OR

Q6) a) Compare Battery with Magneto ignition system. **[6]**

b) Explain exhaust gas recirculation with neat sketch. **[7]**

Q7) a) Derive the following equation for single stage reciprocating compresser. **[6]**

$$\eta vol = 1 - C\left[\left(\frac{P2}{P1}\right)^{\frac{1}{n}} - 1\right]$$

b) A two stage single acting reciprocating air compressor draws in air at 1 bar and 300K.The Delivery pressure is 12 bar. The intermediate pressure is ideal for minimum work and Intercooling is perfect: Compression follows the law $PV^{1.3}$=C. The flow rate of air through the compressor is 0.15 kg/s.

Determine i) Power required to dive the compressor

ii) Saving in the power required compared with single stage

iii) Isothermal efficiency **[7]**

OR

Q8) a) Show polytropic and isothermal compression processes of a single stage reciprocating air compressor on P-V diagram. Also discuss various methods to improve isothermal efficiency of a reciprocating compressor. **[6]**

b) For a single stage single acting reciprocating air compressor, actual volume of air taken in is 10 m^3/min. Initial intake pressure is 1.013 bar initial temperature is 27°C. Final pressure is 900kPa, Clearance is 6% of stroke volume. Compressor runs at 400 r.p.m, Assume L/D=1.25 and index of compression=1.3

Determine:

i) Volumetric efficiency

ii) Cylinder dimensions

iii) Indicated power **[7]**



Total No. of Questions : 8]

SEAT No. :

P6504

[Total No. of Pages : 2

[5869]-460

S.E. (Mechanical, Automobile Mechanical Sandwich) Electrical and Electronics Engineering (2015 Pattern) (Semester - II) (203152)

Time : 2 Hours] ***[Max. Marks : 50***

Instructions to the candidates:

1) ***Attempt Q.1 or Q.2, Q.3 or Q.4, Q.5 or Q.6, Q.7 or Q.8.***
2) ***Neat diagrams must be drawn wherever necessary.***
3) ***Figures to the right indicate full marks.***
4) ***Assume suitable data, if necessary.***

Q1) a) Draw the schematic arrangement to Three Point Starter in a DC shunt motor and explain its working. **[6]**

b) The power input to 500 V, 50 Hz, 6 pole. 3 phase induction motor running at 975 rpm is 40 KW. The stator losses are 1 KW and friction losses are 2 KW. Calculate (i) slip (ii) rotor copper losses and (iii) efficiency of motor. **[7]**

OR

Q2) a) Derive the generalized equation for torque developed in a three-phase induction motor and draw the torque-slip characteristic curve. **[6]**

b) A DC shunt motor has armature resistance of 4 Ω. On full load, it runs at 1600 rpm drawing armature current of 10 A from 200 V DC supply. Find full load torque and starting torque assuming that the flux is maintained constant. **[7]**

Q3) a) Explain the construction and working of Universal Motor with the help of suitable diagrams. Mention its any two applications. **[6]**

b) Write six significance features of ATmega 328P microcontroller. **[6]**

OR

Q4) a) Describe the constructional details and operation of a split phase induction motor with the help of diagrams. **[6]**

b) Write the advantages, disadvantages and applications of a Brushless DC motor. **[6]**

P.T.O.

Q5) a) Explain the following Arduino functions used for serial communication using Arduino IDE. **[6]**

i) Serial.begin()

ii) Serial.end()

iii) Serial.available()

b) Explain the interfacing of LED with Arduino board and write an algorithm to blink an LED. **[6]**

OR

Q6) a) Explain the following functions used to handle GPIO in ATmega 328P based Arduino board with help of syntax: **[6]**

i) PinMode()

ii) DigitalRead()

iii) DigitalWrite()

b) Explain the interfacing of LCD with Arduino board and write an algorithm to display "Hello World" on LCD. **[6]**

Q7) a) Explain in brief the following functions along with syntax for the same: **[6]**

i) AnalogRead()

ii) AnalogWrite()

iii) AnalogReference().

b) What is the necessity of ADC in the architecture of a microcontroller? List any five features of in-built ADC in ATmega 328P microcontroller. **[7]**

OR

Q8) a) Explain the concept of Pulse Width modulation (PWM). Draw the diagram of interfacing a DC motor with Arduino board. **[6]**

b) What is the function of LM35? Explain its interfacing with Arduino Board with the help of diagram and algorithm. **[7]**

□□□

Total No. of Questions : 8]

SEAT No. :

P6505

[Total No. of Pages : 4

[5869]-461
S.E. (Mechanical / Automobile)
Engineering Mathematics - III
(2015 Pattern) (Semester - I) (207002)

Time : 2 Hours] ***[Max. Marks : 50***

Instructions to the candidates:

1) ***Attempt Q.1 or Q.2, Q.3 or Q.4, Q.5 or Q.6, Q.7 or Q.8.***
2) ***Neat diagrams must be drawn wherever necessary.***
3) ***Figures to the right indicate full marks.***
4) ***Use of logarithmic tables slide rule, electronic pocket calculator and is allowed.***
5) ***Assume suitable data, if necessary.***

Q1) a) Solve any two of the following differential equations. **[8]**

i) $\frac{d^3y}{dx^3} - 7\frac{dy}{dx} - 6y = e^{2x}(1+x)$

ii) $(2x+1)^2\frac{d^2y}{dx^2} - 2(2x+1)\frac{dy}{dx} - 12y = 6x$

iii) $\frac{d^2y}{dx^2} - 2\frac{dy}{dx} + 2y = e^x \tan x$, by using method of variation of parameters.

b) Solve the integral equation. **[4]**

$$\int_0^\infty f(x)\cos\lambda x\,dx = \begin{cases} 1-\lambda & 0 \le \lambda \le 1 \\ 0 & \lambda \ge 1 \end{cases}$$

OR

Q2) a) A 8 lb weight is placed at one end of a spring suspended from the ceiling. The weight is raised to 5 inches above the equilibrium position and left free. Assuming the spring constant 12 lb/ft, find the equation of motion, the displacement function, amplitude and period. **[4]**

P.T.O.

b) Solve any one of the following : **[4]**

i) $L[e^{-2t}(3\cos 6t - 5\sin 6t)]$

ii) $L^{-1}\left[\frac{s+7}{s^2+2s+2}\right]$

c) Solve the differential equation by laplace transform method. **[4]**

$$\frac{d^2y}{dt^2} + 2\frac{dy}{dt} + y = te^{-t}, \quad y(0) = 1, y'(0) = -2$$

Q3) a) Find the directional derivative of

$\phi = xy^2 + yz^3$ at $(1,-1,1)$ along the vector $\bar{i} + 2\bar{j} + 2\bar{k}$. **[4]**

b) Show that the vector field

$$\bar{F} = (2xz^3 + 6y)\bar{i} + (6x - 2yz)\bar{j} + (3x^2z^2 - y^2)\bar{k}$$

is irrotational and find scalar function ϕ such that $\bar{F} = \nabla\phi$. **[4]**

c) Find the coefficient of correlation for the following data **[4]**

x	10	14	19	26	30	34	39
y	12	16	18	26	29	35	38

OR

Q4) a) Prove that (any one) : **[4]**

i) $\nabla\left(\frac{\bar{a}_0\bar{r}}{r^n}\right) = \frac{\bar{a}}{r^n} - \frac{n(\bar{a}_0\bar{r})}{r^{n+2}}\bar{r}$

ii) $\nabla_0\left(\frac{\bar{r}}{r^2}\right) = \frac{1}{r^2}$

b) The average number of misprints per page of a book is 1.5. Assuming the distribution of number of misprints to be Poisson, find the probability that a particular book is free from misprints. **[4]**

c) The first four moments about the working mean 30.2 of a distribution are 0.255, 6.222, 30.211 and 400.25. Calculate the first four moments about the mean. **[4]**

Q5) a) Find the work done in moving a particle in a force field $\bar{F} = 3xy\bar{i} - 5z\bar{j} + 10x\bar{k}$ along the curve $x = t^2 + 1$, $y = 2t^2$, $z = t^3$ from $t = 1$ to $t = 2$. **[4]**

b) By using Gauss Divergence theorem, evaluate $\iint_s \frac{x\bar{i} + y\bar{j} + z\bar{k}}{x^2 + y^2 + z^2} \overline{ds}$ where s is the surface of the sphere $x^2 + y^2 + z^2 = a^2$. **[5]**

c) Evaluate $\int_c \bar{F} \cdot d\bar{r}$ by using stoke's theorem for $\bar{F} = 4y\bar{i} - 4x\bar{j} + 3\bar{k}$ where s is a disc of radius 1 lying on the plane z = 1 and c is the boundary of the disc. **[4]**

OR

Q6) a) Using Green's theorem evaluate $\int_c (xy - x^2)\,dx + x^2 dy$ along the curve c formed by $y = 0$, $x = 1$, $y = x$. **[5]**

b) Show that $\iiint_v \frac{dv}{r^2} = \iint_s \frac{\bar{r} \cdot \hat{n}}{r^2} ds$. **[4]**

c) By using stoke's theorem, evaluate $\iint_s (\nabla \times \bar{F}) \cdot \hat{n}\, ds$ for $\bar{F} = y\bar{i} + z\bar{j} + x\bar{k}$ where s is the surface of the parabolide $z = 1 - x^2 - y^2$, $z \geq 0$. **[4]**

Q7) a) Find the deflection u(x, t) of a vibrating string of length π, whose both ends are fixed, the deflection is given by, $\frac{\partial^2 u}{\partial t^2} = 1 \cdot \frac{\partial^2 u}{\partial x^2}$. Find the displacement of the string at any time t. Given initial deflection is $0.01(\pi - x)$. **[7]**

b) Solve $\frac{\partial u}{\partial t} = c^2 \frac{\partial^2 u}{\partial x^2}$ under the conditions **[6]**

i) u is finite ; $\forall t$ ii) $u(0, t) = 0$; $\forall t$

iii) $u(L, t) = 0$ $\forall t$ iv) $u(x, 0) = u_0$ $0 \leq x \leq L$

OR

Q8) a) Solve the equation $\frac{\partial^2 u}{\partial x^2}+\frac{\partial^2 u}{\partial y^2}=0$ under conditions **[7]**

i) $u(x, \infty) = 0 \quad ; \forall x$ ii) $u(0, y) = 0 \; ; \; \forall y$

iii) $u(1, y) = 0 \quad \forall y$ iv) $u(x, 0) = 100 \quad 0 \le x \le 1$

b) Using Fourier transform solve $\frac{\partial u}{\partial t}=\frac{\partial^2 u}{\partial x^2} \quad -\infty < x < \infty, \; t > 0$ if the initial temperature along the length of an infinite bar is given by

$$u(x,0)=\begin{cases}2 & |x|<1\\ 0 & |x|>1\end{cases}$$

Find the temperature at any point of the bar at any time t. **[6]**

□□□

Total No. of Questions : 8] **SEAT No. :**

P3917 **[Total No. of Pages : 4**

[5869]-462
S.E. (Mechanical/Automobile)
THERMODYNAMICS
(2015 Pattern) (Semester-I) (202043)

Time : 2 Hours] ***[Max. Marks : 50***

Instructions to the candidates:

1) ***Solve 4 questions, Q.1 or Q.2, Q.3 or Q.4, Q.5 or Q.6, Q.7 or Q.8.***
2) ***Answers for the four questions should be written in same answer book. Attach supplement if required.***
3) ***Neat diagrams should be drawn wherever necessary.***
4) ***Use of steam tables, Psychrometric chart, mollier chart, scientific calculator is allowed.***
5) ***Assume suitable data, if necessary.***
6) ***Figures to the right indicate full marks.***

Q1) a) Show that Kelvin planck statement and Clausius statement are equivalent and lead to the same meaning. **[6]**

b) A certain mass of air, initially a pressure of 480 kPa and temperature of 190°C is expanded adiabatically to a pressure of 94 kPa. It is then heated at constant volume until it attains its initial temperature; when its pressure is found to be 150 kPa. State the type of compression necessary to bring the system back to its original pressure and volume. Also determine the index of adiabatic expansion and the work done per kg of air. Show the cycle on p.v. and t-s diagram.

Take R = 0.29 kJ/kg K for air **[6]**

OR

Q2) a) A heat engine receives 800 kJ of heat from a high temperature source at 1100 K and rejects 500 kJ of it to a low temperature sink at 310 K. Determine if this heat engine violates the second law of thermodynamics on the basis of i) the Clausius inequality and ii) the cannot principle. **[6]**

b) A thermal energy source at 800K loses 2000kJ of heat to a sink at i) 500 K and ii) 750 K. Determine which heat transfer process is more irreversible. **[6]**

P.T.O.

Q3) a) Explain the term Mean Effective pressure. What is its significance? **[4]**

b) Define the terms - i) Compression Ratio

ii) Load Ratio

iii) Constant volume heat addition pressure ratio

as applicable in Air standard cycles.

[3]

c) With the help of T-s diagram, explain how the following actions lead to increase in efficiency of Rankine cycle-

i) Lowering the condenser pressure

ii) Superheating the steam to high temperatures.

iii) Increasing the boiler pressure. **[6]**

OR

Q4) a) A heat engine receives heat from a source at 1200 K at a rate of 500 kJ/s and rejects the waste heat to a medium at 300 K. The power output of the heat engine is 180kW. Determine the reversible power and the irreversibility for this process. **[6]**

b) A combined separating and throttling colorimeter was used to determine the dryness fraction of steam flowing through a steam main pipe line at a pressure of 900kN/m^2. The pressure and temperature after throttling were 0.1 MN/m^2 and 115°C respectively. The mass of steam condensed after throttling was 1.8 kg and the mass of water collected in the separator was 0.16kg. Estimate the dryness fraction of steam in the main. **[7]**

Q5) a) What do you understand by the term "Boiler draught"? What are the advantages of artificial draught over natural draught? **[7]**

b) Write a list of the different boiler accessories and mention the function of each of them. **[6]**

OR

Q6) a) The following observations were taken in a trial on a steam boiler -

Coal used :- 750 kg/h

Feed water supplied :- 7000Kg/h

Feed water temperature at economiser inlet :- 30°C

Feed water temperature at economiser outlet :- 85°C

Working pressure of boiler :- 10 bar

Quality of steam leaving the boiler - 0.96 dry

Temperature of steam leaving the super heater :- 250°C

Determine the thermal efficiency of the plant. **[7]**

b) What are the advantages of high pressure boilers. **[6]**

Q7) a) Consider a house which contains air at 20°C and 75% relative humidity, while the outside temperature is 10°C. At what window temperature will the moisture in the air start condensing on the inner surfaces of the windows? **[4]**

b) What do you understand by relative humidity of air? What is its significance? **[2]**

c) A 5m×5m×3m room contains air at 25°C and 100 kPa at a relative humidity of 75%. Determine i) the partial pressure of dry air

ii) the specific humidity of the air

iii) the enthalpy per unit mass of dry air. **[6]**

OR

Q8) a) Show the following air conditioning processes on a psychrometric chart -

i) Simple heating and cooling

ii) Heating with humidification

iii) Cooling with dehumidification

[6]

b) Air enters an evaporative cooler at 1atm; 35°C and 20% relative humidity. It exits at 80% relative humidity. Determine the exit temperature of the air and the lowest temperature to which the air can be cooled by this evaporative cooler. **[6]**

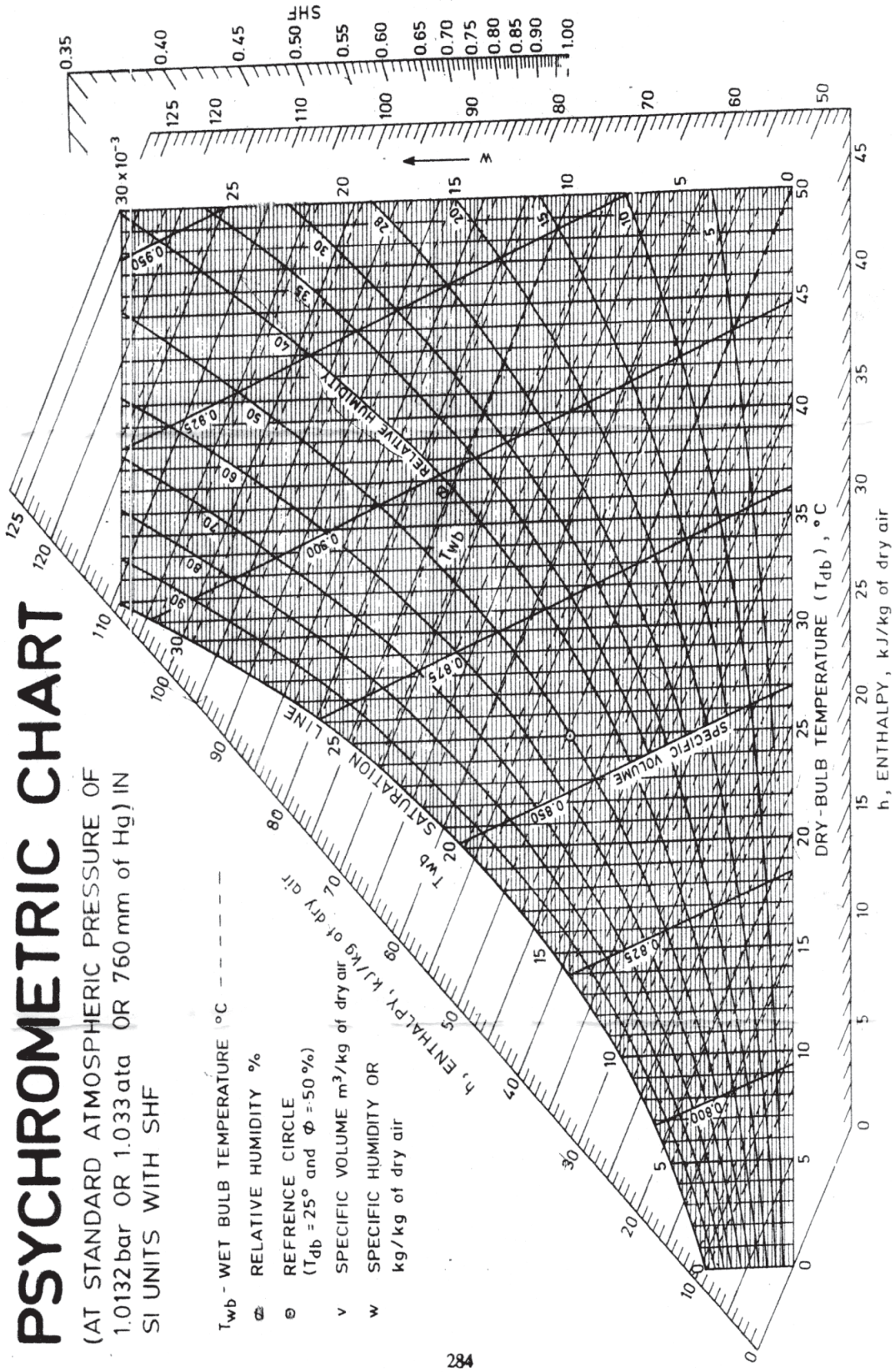

Fig. 9(a) Psychrometric chart on T_{db} - w plane

Total No. of Questions : 8]

SEAT No. : ____

P3918

[Total No. of Pages : 5

[5869] - 463

S.E. (Mechanical/Automobile)

STRENGTH OF MATERIALS

(2015 Pattern) (Semester - I) (202051)

Time : 2 Hours] ***[Max. Marks : 50***

Instructions to the candidates :

1) ***Answer questions Q.1 or Q.2, Q.3 or Q.4, Q.5 or Q.6, Q.7 or Q.8.***
2) ***Neat diagrams must be drawn wherever necessary.***
3) ***Figures to the right indicate full marks.***
4) ***Use of electronic pocket calculator is allowed.***
5) ***Assume suitable data, if necessary.***

Q1) a) A steel bar of 20 mm diameter is loaded as shown in figure. Determine the stress in each part and the total elongation. Take E = 2010 GPa. **[6]**

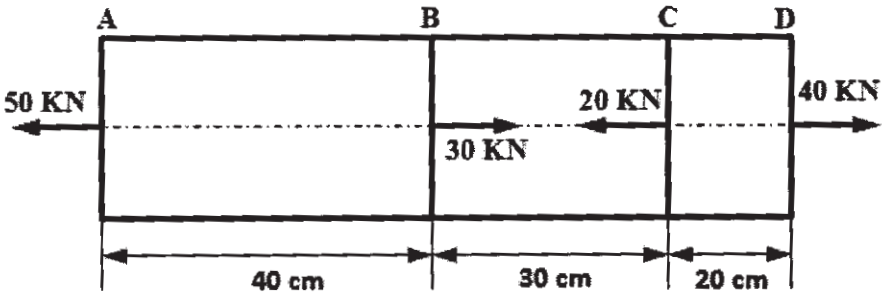

b) A simply supported beam AB is loaded as shown in figure. Draw S.F.D. and B.M.D. indicating maximum bending moment and determine its value. **[6]**

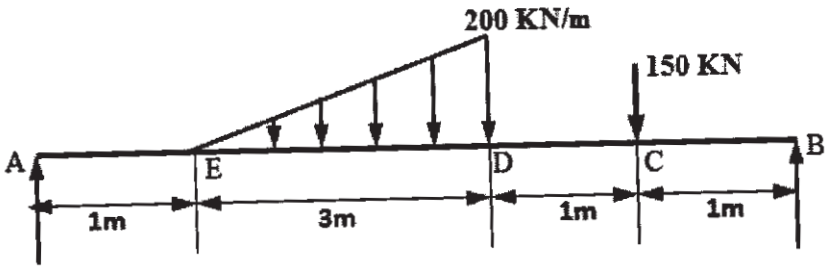

OR

P.T.O.

Q2) a) As shown in figure a copper and steel wire of area 25 mm^2 and 35 mm^2 respectively, share a load of 10 KN. Determine value of normal stress developed in copper and steel wire. Take E_S = 200 GPa, E_C = 100 GPa. **[6]**

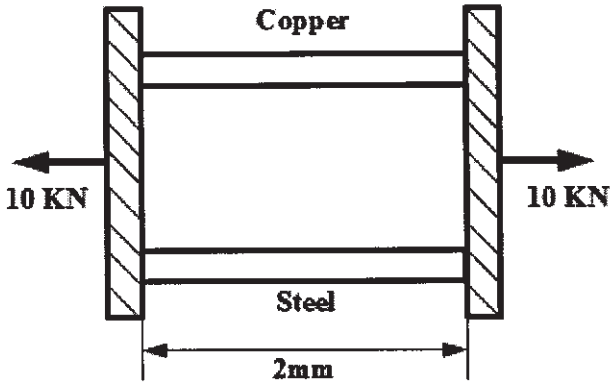

b) A simply supported beam AB is loaded as shown in figure. Draw S.F.D. and B.M.D. indicating maximum bending moment and determine its value. **[6]**

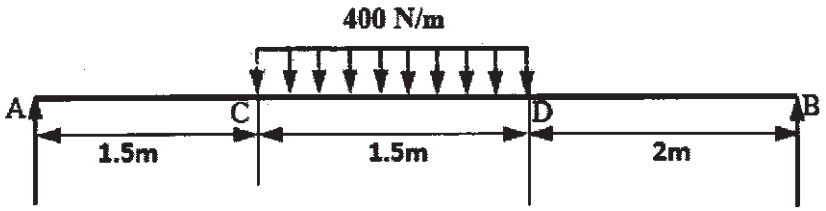

Q3) a) A cast iron bracket subject to bending has the cross-section of I-form with unequal flanges. The dimensions of the section are shown in figure. Find the position of the neutral axis. The moment of inertia of the section about N.A. is 2.849×10^8 mm^4. If the maximum bending moment on the section is 40 MN-mm, determine the maximum bending stress and its nature. Also draw bending stress distribution across the depth of section. **[6]**

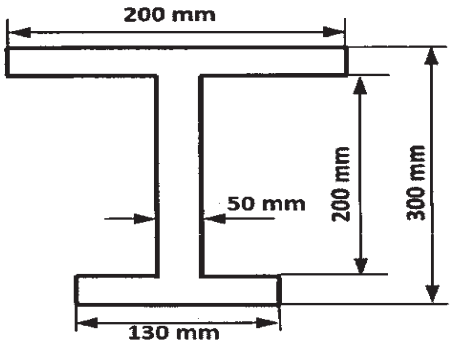

b) A beam of length 6m is simply supported at its ends and carries two points loads of 48 KN and 40 KN at distance 1m and 3m respectively from the left support. Find : **[6]**

i) deflection under each load

ii) maximum deflection and

iii) the point at which maximum deflection occurs.

Take $E = 2 \times 10^5$ N/mm^2 and $I = 85 \times 10^6$ mm^4.

OR

Q4) a) The shear force acting on a section of a beam is 50 KN. The section of the beam is of T-shaped as shown in figure. The moment of inertia about the horizontal neutral axis is 314.221×10^4 mm^4. Calculate the maximum shear stress and also draw the shear stress distribution over the depth of section. **[6]**

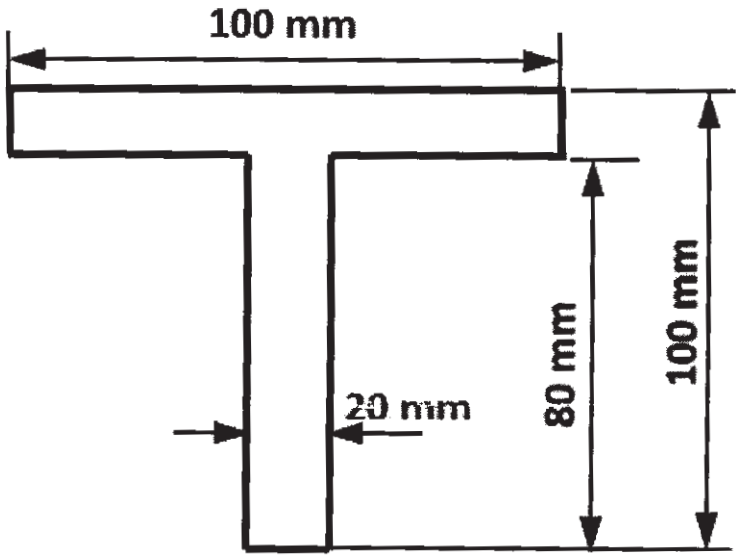

b) A steel rod is 2m long and 50mm in diameter. An axial pull of 100 KN is suddenly applied to the rod. Calculate the instantaneous stress induced and also the instantaneous elongation produced in rod. Take $E = 200$ GN/m^2. **[6]**

Q5) a) Determine the diameter of a solid steel shaft which will transmit 90 KW at 160 rpm. Also determine the length of the shaft if twist must not exceed 1° over the entire length. The maximum shear stress is limited to 60 N/mm^2. Take modulus of rigidity = 8×10^4 N/mm^2. **[6]**

b) A solid round bar 4m long and 5cm in diameter was found to extend 4.6mm under a tensile load of 50 KN. This bar is used as a strut with both ends hinged. Determine the buckling load for the bar and also the safe load taking factor of safety as 4.0. **[7]**

OR

Q6) a) A hollow shaft, having an internal diameter 40% of its external diameter, transmits 562.5 KW power at 100 rpm. Determine the external diameter of the shaft if the shear stress is not to exceed 60 N/mm^2 and the twist in a length of 2.5m should not exceed 1.3°. Assume maximum torque = 1.25 times mean torque and modulus of rigidity = 9×10^4 N/mm^2. **[6]**

b) The external and internal diameter of a hollow cast iron column is 5cm and 4cm respectively. If the length of this column is 3m and both of its ends are fixed, determine the crippling load using Rankine's formula. Take crushing stress σ_c = 550 N/mm^2 and value of Rankine's constant, $a = \frac{1}{1600}$ in Rankine formula. **[7]**

Q7) a) A rectangular block ABCD is subjected to stress as shown in figure. Using analytical approach. Determine the normal and tangential stresses across the oblique plane AM. Also find resultant stress and angle of obliquity. **[7]**

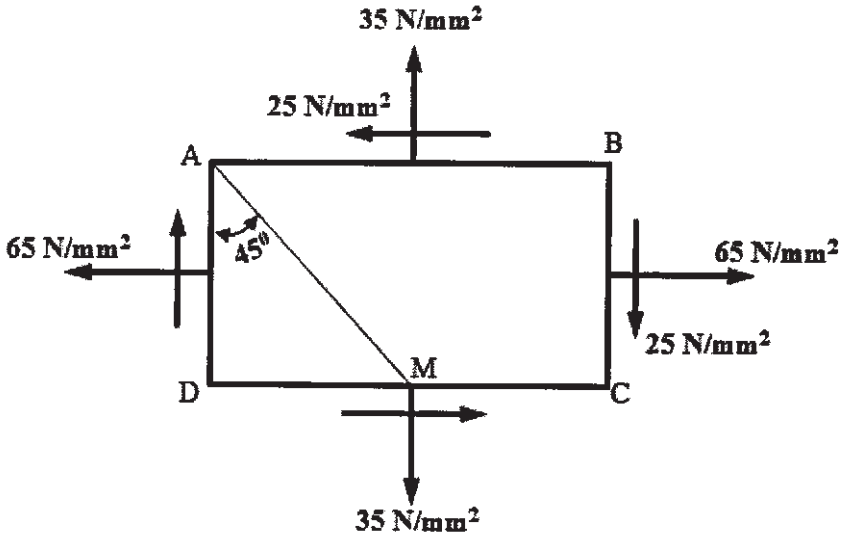

b) At a section of a mild steel shaft, the maximum torque is 8437.5 Nm and maximum bending moment is 5062.5 Nm. The diameter of shaft is 90 mm and the stress at the elastic limit in simple tension for the material of the shaft is 220 N/mm^2. Determine the Factor of Safety according to maximum shear stress theory. **[6]**

OR

Q8) A rectangular block is subjected to tensile stress of 10 N/mm^2 on one plane and a tensile stress of 20 N/mm^2 on the plane at right angles to the former one. Each of the above stress is accompanied by a shear stress of 10 N/mm^2 and its direction as shown in figure. Using Mohr's circle method (without using any analytical approach). Determine : **[13]**

a) The direction and magnitude of major and minor principal stress.

b) Magnitude of the greatest shear stress.

Draw the Mohr's circle only in Graph Paper with suitable scale factor.

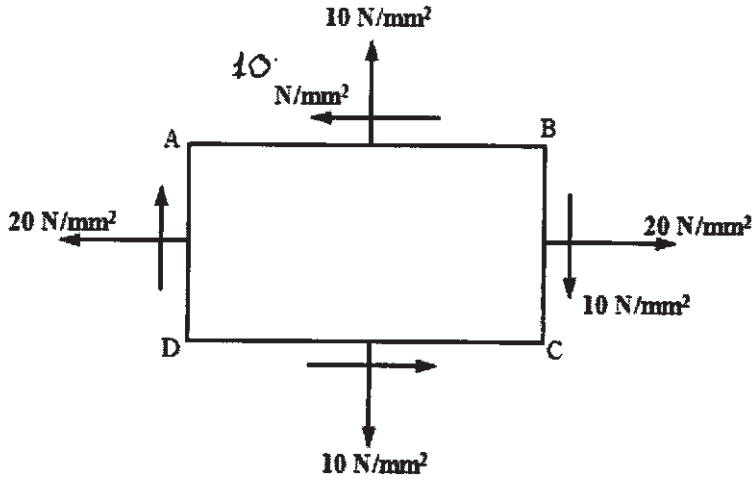

Total No. of Questions : 8]

SEAT No. :

P3919

[Total No. of Pages : 3

[5869] - 464

S.E. (Mechanical /Automobile)

MANUFACTURING PROCESS - I

(2015 Pattern) (Semester - I) (202041)

Time : 2 Hours] ***[Max. Marks : 50***

Instructions to the candidates :

1) ***All questions are compulsory i.e. Solve Q.1 or Q.2, Q.3 or Q.4, Q.5 or Q.6, Q.7 or Q.8.***
2) ***Figures to the right indicate full marks.***
3) ***Assume suitable data, if necessary.***
4) ***Neat diagrams must be drawn wherever necessary.***

Q1) a) Explain the steps involved in making sand mold with sketch. **[6]**

b) A billet is 70 mm long with initial diameter of 40 mm is direct extruded to a diameter of 25 mm. For the work metal K = 600 MPa and n = 0.15. Take a = 0.8 and b = 1.4 for Johnson formula. Calculate : **[6]**

i) True strain.

ii) Extrusion strain.

iii) Average flow stress.

iv) Ram pressure (at L = 60, 40 and 15 mm). Take extrusion ratio as 1.50.

OR

Q2) a) What are the advantages of forging over the casting process? Differentiate between open die forging and closed die forging. **[6]**

b) In casting experiments performed using a certain alloy and type of sand mold; it took 150 sec. for a cube shaped casting to solidify. The side of cube was 50 mm. **[6]**

i) Determine the value of mold constant.

ii) If the same alloy and mold type were used, find the total solidification time for cylindrical casting in which the diameter D = 30 mm and length L = 55 mm.

P.T.O.

Q3) a) Explain blow molding process with neat sketch. State its advantages and limitations. **[6]**

b) Explain with neat sketch GMAW and its application. **[6]**

OR

Q4) a) Explain with neat sketch thermoforming process. **[6]**

b) State any two advantages and limitations of soldering, brazing and braze welding. **[6]**

Q5) a) Differentiate between compound die and combination die. State the different sheet metal working operations. **[7]**

b) The washer of 30 mm outer diameter and 15 mm inner diameter are to be made by press work from mild steel sheet of 1 mm thickness. **[6]**

Determine :

i) Clearance.

ii) Piercing die and punch sizes.

iii) Blanking die and punch sizes. Assume 5% clearance on sheet thickness.

OR

Q6) a) List different operations performed on sheet-metal. Explain any two operations with neat sketch. **[7]**

b) A cup without flanges and height 250 mm and diameter 100 mm is to be made from sheet metal of 1 mm thickness with ultimate tensile strength of 410 MPa. Find : **[6]**

i) Blank size.

ii) No. of draws.

iii) Punch and die radius.

iv) Die clearance.

v) Die force. (Assume C = 0.65).

Q7) a) Why chucks are used? List various types of chucks and explain anyone. **[7]**

b) Calculate machining time for a work piece of 80 mm diameter and 120 mm length turned in 2 passes if the approach length is 12 mm and over travel is 6 mm. Given cutting speed = 30 m/min and feed 0.3 mm/rev. **[6]**

OR

Q8) a) State various taper turning methods on lathe. Explain any one with sketch. **[7]**

b) List the various lathe machine accessories. Describe any 2 with neat sketch. **[6]**



Total No. of Questions : 8] **SEAT No. :**

P3920 **[Total No. of Pages : 4**

[5869] - 465
S.E. (Mechanical/Automobile)
MATERIAL SCIENCE
(2015 Pattern) (Semester - I) (202044)

Time : 2 Hours] ***[Max. Marks : 50***

Instructions to the candidates :

1) ***Solve Q.1 or Q.2, Q.3 or Q.4, Q.5 or Q.6, Q.7 or Q.8.***
2) ***Figures to the right indicate full marks.***
3) ***Draw the neat sketch wherever necessary.***

Q1) a) Explain the procedure of indexing of lattice planes with suitable example. **[4]**

b) Differentiate between simple cubic and body centered cubic crystal structure on the basis of following : **[4]**

i) Atomic packing factor.

ii) Average number of atoms per unit cell.

iii) Coordination number.

iv) Relation between radius and lattice constant of unit cell.

c) Explain the concept of "Deformation of single crystal by slip" with neat sketch. **[4]**

OR

Q2) a) Identify the type of crystal structure for the following metals (any four) : **[4]**

i) Iron.

ii) Aluminum.

iii) Nickel.

iv) Chromium.

v) Zinc.

P.T.O.

b) Differentiate between cold working and hot working on basis of following : **[4]**

i) Working temperature.

ii) Energy required for plastic deformation.

iii) Stress required for deformation.

iv) Surface finish.

c) Define the following on the basis of structure and application **[4]**

i) Polymer.

ii) Ceramics.

Q3) a) Identify the type of corrosion in following cases (any five) : **[5]**

i) Corrosion occurs at grain boundaries due to precipitation of some phase of grain boundary.

ii) Stress corrosion of copper alloys like brasses in when the humidity is high.

iii) Corrosion by the simultaneous effect of environment and cyclic fluctuation stresses.

iv) Localized, accelerated attack in formation of cavities around which metal is relatively unaffected.

v) When two dissimilar metals are in contact and exposed to an electrolyte.

vi) Stress corrosion occurs on steel, exposed to alkaline solutions at high temperatures and stresses.

b) What is fatigue failure? List out the parameters that affects fatigue failure. **[4]**

c) Draw Stress strain curve for steel. Show the following properties on it **[4]**

i)	Resilience	ii)	Toughness
iii)	Proof stress	iv)	Necking point

OR

Q4) a) Identify the methods of NDT in following cases (any five) : **[5]**

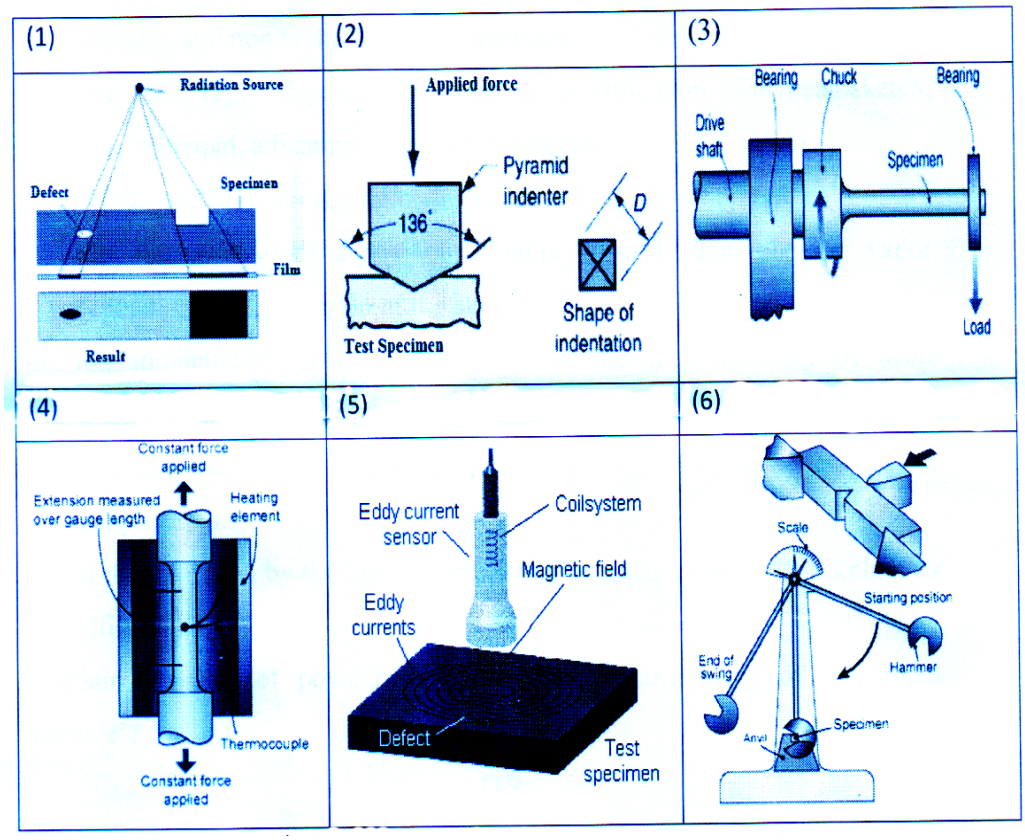

b) What is "Pitting corrosion"? What are the situations when it occurs? **[4]**

c) What are the various points should be consider during design and fabrication of the component, to avoid corrosion in materials. **[4]**

Q5) a) Explain 'Ion implantation method' of surface modification with neat sketch, working principal, advantages and disadvantages. **[5]**

b) Differentiate between Physical vapor deposition and chemical vapor deposition on the basis of following factors **[4]**

i) Deposition rate.

ii) Purity of the deposit.

iii) Surface finish.

iv) Versatility in composition of the deposit.

c) Explain with neat sketch and working principal, the sequence of events that occur at a surface in a chemical vapor deposition process. **[4]**

OR

Q6) a) What is the significance of coating on the material properties? Explain any two metallic and non metallic coating methods? **[5]**

b) Explain 'Ion vapor deposition' of surface modification with neat sketch, working principal, advantages and disadvantages. **[4]**

c) State True and False for the following cases and justify your answer **[4]**

i) The chemical vapor deposition is more versatile than physical vapor deposition in composition of the deposit.

ii) Ion implantation is commonly used in the manufacturing of semi conductor devices, tools and die materials.

Q7) a) Explain any four applications of powder metallurgy with two examples for each application. **[4]**

b) What do you mean by the term "Compacting of metal powders"? Explain its classifications. **[4]**

c) Explain the role of powder metallurgy for manufacturing of 'cemented carbide'. **[4]**

OR

Q8) a) Explain powder metallurgy with characteristics of metal powders, advantages, disadvantages. **[4]**

b) Define the following terms related to properties of P/M materials **[4]**

i) Green Density.

ii) Green Strength.

iii) Green Spring.

iv) Compatibility.

c) What is a 'self lubricated bearing'? Explain the role of powder metallurgy for manufacturing of 'self lubricated bearings? **[4]**

