Total No. of Questions : 8]

SEAT No. : ____

PB2170

[6263]-1

[Total No. of Pages :2

B.E. (Automobile Engineering)

AUTOMOTIVE TESTING AND CERTIFICATION

(2019 Pattern) (Semester- VII) (416481)

Time : 2½ Hours] ***[Max. Marks : 70***

Instructions to the candidates:

1) ***Answer Q.1 or Q.2, Q.3 or Q.4, Q.5 or Q.6, Q.7 or Q.8.***
2) ***Figures to the right indicate full marks.***
3) ***Neat diagrams must be drawn wherever necessary.***
4) ***Assume Suitable data if necessary.***

Q1) a) What is meant by proving ground? Enlist the different types of tracks used for vehicle testing. **[9]**

b) Explain Gradability test and Endurance test. **[9]**

OR

Q2) a) Explain Turning circle diameter test with figures. **[9]**

b) Explain free acceleration test as per IS standard. **[9]**

Q3) a) Explain Indian Driving Cycle in detail. **[8]**

b) Explain any two following transient cycles tests,

i) World Harmonized Transient Cycle (WHTC)

ii) European Transient Cycle (ETC)

iii) Non Road Transient Cycle (NRTC) **[9]**

OR

Q4) a) Explain Evaporative Emission Test as per IS standard. **[8]**

b) Write a short note on Real Drive Emission Test. **[9]**

P.T.O.

Q5) a) Explain Pass by noise test and its requirements. **[8]**

b) Explain Transmission noise and its measurement methods. **[9]**

OR

Q6) a) What are the different sources of interior noise generation of a vehicle? What are the ways to eliminate/ reduce interior noise? Explain briefly. **[8]**

b) Explain Briefly **[9]**

i) Exhaust Noise

ii) Engine Noise

iii) Vehicle structure noise

Q7) a) Explain the procedure for Horn Testing. **[9]**

b) How air bag test is performed on the vehicle? Explain briefly. **[9]**

OR

Q8) a) Explain the procedure for Steering Impact test. **[9]**

b) Explain the procedure for Rear View Mirror Testing. **[9]**



Total No. of Questions : 8] **SEAT No. :**

PB-2171

[Total No. of Pages : 3

[6263]-2
B.E. (Automobile)
Machine & Vehicle Dynamics
(Semester - VII) (2019 Pattern) (416482)

Time : 2½ Hours] ***[Max. Marks : 70***

Instructions to the candidates:

1) ***Answer Q1 or Q2, Q3 or Q4, Q5 or Q6, Q7 or Q8***
2) ***Neat diagrams must be drawn wherever necessary.***
3) ***Figures to the right side indicate full marks.***
4) ***Assume Suitable data if necessary.***

Q1) a) Derive an expression of magnification factor in case of steady state forced vibrations. **[7]**

b) A machine weighing 1670 N is mounted on spring having stiffness k=10790 N/cm. A piston within the machine weighing 20 N has a reciprocating motion with a stroke of 7.5 cm and a speed of 6000 rpm. Assuming the motion to be simple harmonic. determine (a) the amplitude of vibration of the machine and (b) the transmissibility and the force transmitted to the ground. Take C = 0.2. **[10]**

OR

Q2) a) Explain the free vibration of 2-DOF system with an example and mode shape of 2-DOF System. **[7]**

b) A 54 N weight is suspended by a spring with a stiffness of 1100 N/m. It is forced to vibrate by a harmonic force of 5 N. Assuming a viscous damping of c= 77 N-s/m, Determine **[10]**

i) Resonance Frequency

ii) Amplitude at resonance

iii) Phase angle at resonance

iv) Damped Frequency

v) Frequency corresponding to peak amplitude

P.T.O.

Q3) a) Write in brief about Various external forces acting on vehicle. **[6]**

b) Explain the following terms

i) Lumped Mass **[3]**

ii) Vehicle fixed Coordinate System **[3]**

iii) Earth Fixed Coordinate System **[3]**

iv) Dynamic Axle Loads **[3]**

OR

Q4) a) What is Draw Bar pull and explain its relation with Engine power. **[6]**

b) With axle load diagram explain wheel load at **[12]**

i) Level ground

ii) Low speed acceleration

iii) On gradient

Q5) a) What are the basic components of power limited acceleration system?**[6]**

b) Consider a light truck weighing 1648.808 kg, performing a full stop from 60 mph on a level surface with a brake application that develops a steady brake force of 907.1847 kg. Determine the deceleration, stopping distance, time to stop, energy dissipated and the brake horsepower at initial application and averaged over the stop. Neglect aerodynamic and rolling resistance forces. consider, 1 mph=1.60 km/hr **[12]**

OR

Q6) a) Derive the expression for stopping distance and time. **[8]**

b) Calculate the minimum stopping distance for a vehicle has wheel base L = 3h. travelling at 60 kmph with deceleration equal to acceleration due to gravity . If brake is applied on all 4-wheels over a road whose adhesion factor is 0.6, determine the percentage of weight transferred from rear to front wheels. where *h* is height from centre of gravity from ground. **[10]**

Q7) Write a brief note on

a) Neutral steer, under steer and over steer. **[4]**

b) Constant radius method for under steer gradient measurement **[5]**

c) Mathematical model of handling. **[4]**

d) Effects of damping the vibration. **[4]**

OR

Q8) Write a brief note on

a) Explain yaw velocity response / gain **[4]**

b) Constant speed method for under steer gradient measurement. **[5]**

c) Excitation sources for vehicle ride. **[4]**

d) Active and semi active suspension. **[4]**



Total No. of Questions : 8]

SEAT No. : ____

PB2172

[Total No. of Pages : 2

[6263]-3

B.E. (Automobile)

INDUSTRIAL ENGINEERING

(2019 Pattern) (Semester - VII) (416483)

Time : 2 Hours] ***[Max. Marks : 50***

Instructions to the candidates:

1) ***Answer Q.1 or Q.2, Q.3 or Q.4, Q.5 or Q.6, Q.7 or Q.8.***
2) ***Neat diagrams must be drawn wherever necessary.***
3) ***Figures to the right side indicate full marks.***
4) ***Assume Suitable data if necessary.***

Q1) a) Explain importance of Industrial engineering. **[7]**

b) Explain Five S technique of Productivity Improvement. **[6]**

OR

Q2) a) Explain briefly the factors affecting productivity. **[7]**

b) Explain importance of Productivity. **[6]**

Q3) a) Explain objectives, scope of Work Study. What are human factors in work study? **[6]**

b) Write short note on MOST(Maynard Operation Sequence Technique). **[6]**

OR

Q4) a) What is Allowance? Explain any two types of Allowance. **[6]**

b) Explain factors affecting rate of working. **[6]**

P.T.O.

Q5) a) What do you mean by plant Location? Mr. Vishal wants to start his new plant, for this suggests which are the different factors that he should consider while selecting location for his new plant? **[6]**

b) Explain the Selection criterion for material handling. **[7]**

OR

Q6) a) Explain factors affecting plant layout. **[6]**

b) Write different principles of Material handling equipment. **[7]**

Q7) a) Explain the objectives of Production Planning and Control. **[6]**

b) Explain the objectives of Inventory Control. **[6]**

OR

Q8) a) Explain Just-in-Time system. **[6]**

b) Write a short note on Supply Chain Management (SCM). **[6]**



Total No. of Questions : 8]

SEAT No. :

PB2173

[Total No. of Pages : 3

[6263]-4

B.E. (Automobile Engg.)

ARTIFICIAL INTELLIGENCE & MACHINE LEARNING

(2019 Pattern) (Semester - VII) (Elective - III) (416484 A)

Time : 2½ Hours] *[Max. Marks : 70*

Instructions to the candidates:

1) ***Answer Q.1 or Q.2, Q.3 or Q.4, Q.5 or Q.6, Q.7 or Q.8.***
2) ***Neat diagrams must be drawn wherever necessary.***
3) ***Figures to right indicate full marks.***
4) ***Use of calculator is allowed.***
5) ***Assume suitable data, if necessary.***

Q1) a) What is over-fitting in decision tree? Explain the techniques to avoid over-fitting. **[6]**

b) Explain the following terms: **[5]**

i) Entropy

ii) Information gain

c) What is SVM? Explain types of SVM with neat sketches. **[6]**

OR

Q2) a) Differentiate between classification and regression model. **[6]**

b) Explain the steps in KNN algorithm. **[5]**

c) Explain the evaluation parameters for regression model. **[6]**

Q3) a) How ML model is developed. **[7]**

b) Quality Engineer wants to solve a two-class classification problem for predicting whether a product is defective. The actual number of products containing no defect are 850 (Truly predicted positives = 800), the actual number defective products are 50 (Truly predicted negatives = 30). So, Calculate accuracy, precision, recall and f1 score. **[4]**

c) Explain hyperparameter tuning parameters in random forest. **[7]**

OR

P.T.O.

Q4) a) What are the different cross validation techniques? Explain K-fold cross validation with neat sketch. **[7]**

b) A sugar factory produces 3 sizes of sugar from there different nets. Daily 1000 tons of sugar produced from net-1, 3000 tons produced from net-2 and 2000 tons produced from net-3. The last year season experience shows that 1.5% of the total sugar produced from net 1 is waste sugar. The corresponding fractions of waste sugars for the remaining nets are 2.5% and 2% respectively. A certain amount of sugar is taken as a sample at random and is found to be waste sugar. Find out the probability that it is produced from **[4]**

i) Net1

ii) Net2

iii) Net3

c) What are the different classification algorithms? Explain logistic regression with neat sketch. **[7]**

Q5) a) Explain the concept of Reinforcement learning with suitable example. Define following terms in Reinforcement learning **[8]**

i) Agent

ii) State

iii) Environment

iv) Reward

b) Define Markov property. Explain why Markov property is most applicable in solving Reinforcement learning problems. **[6]**

c) The transfer function of neuron on one layer of a neural network is assumed to be of sigmoid form. Evaluate the output of neuron corresponding to input x = 0.62. How is the nature of sigmoid function. (Justify the answer with plot). **[4]**

OR

Q6) a) Explain Convolution Neural Network (CNN) using neat flow diagram. Explain padding and striding in CNN. **[8]**

b) Explain Q-learning algorithm with flow diagram. **[6]**

c) A neuron with 4 inputs has the weights 1, 2, 3, 4 and bias 0. The activation function is linear, say the function f(x) = 2x. If the inputs are 4, 8, 5, 6 compute the output. Draw a diagram representing the neuron. **[4]**

Q7) a) What do you mean by access control using facial recognition? State its importance with respect to automotive industry. **[6]**

b) Explain how AI is used in route optimization. **[5]**

c) Explain auto part design using digital twins. **[6]**

OR

Q8) a) Explain the role of AIML in AGVs. **[6]**

b) List steps involved in vehicle health diagnostics assisted by machine learning. **[5]**

c) Explain role of AI&ML in Autonomous Vehicles. **[6]**



Total No. of Questions : 8]

SEAT No. :

PB-4478

[Total No. of Pages : 2

[6263]-6R

B.E. (Automobile/Mechanical)

INTERNET OF THINGS

(2019 Pattern) (Semester - VII) (402044E) (Elective-III)

Time : 2½ Hours] ***[Max. Marks : 70***

Instructions to the candidates:

1) ***Answer Q.1 or Q.2, Q.3 or Q.4, Q.5 or Q.6, Q.7 or Q.8.***
2) ***Neat diagram must be drawn wherever necessary,***
3) ***Figures to right side indicate full marks.***
4) ***Use of calculator is allowed.***
5) ***Assume suitable data if necessary.***

Q1) a) Explain the characteristics of IoT. **[10]**

b) What are the various sensors and actuators used in IoT. **[8]**

OR.

Q2) a) What is 3 layer and 5 layer IoT Architecture and what is IoT Protocols. **[10]**

b) Difference Between Microprocessor and Microcontroller. **[8]**

Q3) a) "What is the role and function of input and output interfaces in IoT systems"? **[10]**

b) What is the difference between public, private and hybrid deployment cloud models in IoT. **[8]**

OR

Q4) a) What advantages does posting sensor data to a web server provide? **[10]**

b) What are the different key elements and entities in M2M value chains? **[8]**

P.T.O.

Q5) a) What are the different Key Features and Characteristics of MQTT along with the Common Use Cases of MQTT protocol? **[9]**

b) What benefits does JSON offer in comparison to other data interchange formats or languages? **[8]**

OR

Q6) a) What is the key difference between MongoDB and SQL databases? **[9]**

b) State how REST is relevant in the context of IoT and data communication. **[8]**

Q7) a) How IoT plays a vital role in Health and Lifestyle with suitable example? **[9]**

b) What challenges or limitations should be considered when implementing IoT-based surveillance systems? **[8]**

OR

Q8) a) "What are some essential applications of IoT technology in connected vehicles"? **[9]**

b) "How does IoT technology contribute to the field of home automation"? **[8]**

⌘⌘⌘

Total No. of Questions : 8]

SEAT No. :

PB-2175

[Total No. of Pages : 3

[6263]-7

B.E.(Automobile Engineering)

FINITE ELEMENTS ANALYSIS

(2019 Pattern) (Semester - VII) (416485-A) (Elective - IV)

Time : 2½ Hours] *[Max. Marks : 70*

Instructions to the candidates:

1) ***Answer Q1 or Q2, Q3 or Q4, Q5 or Q6, Q7 or Q8.***
2) ***Neat diagrams must be drawn wherever necessary.***
3) ***Figures to the right side indicate full marks.***
4) ***Use of Logarithmic tables, slide rule, electronic pocket calculator is allowed.***
5) ***Assume suitable data if necessary.***

Q1) a) A constant Strain triangle is defined by three nodes 1(1.5, 2), 2(7, 3.5) and 3(4, 7). Evaluate the shape function N1, N2 and N3 for interior point P (3.85, 4.8). **[10]**

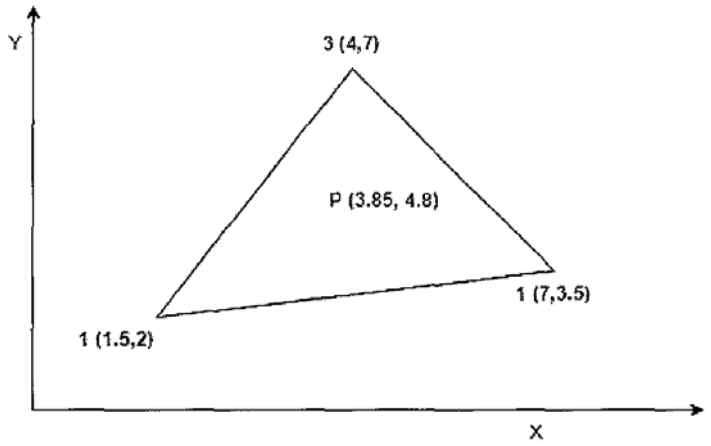

Fig. 1

b) Explain Plane Stress and Plane Strain condition and how it is used for conversion of 3D problem into 2D problem. **[8]**

OR

P.T.O

Q2) a) Determine the Cartesian Coordinate of Point $P(\xi=0.5,\eta=0.6)$, shown in Fig. 2 **[10]**

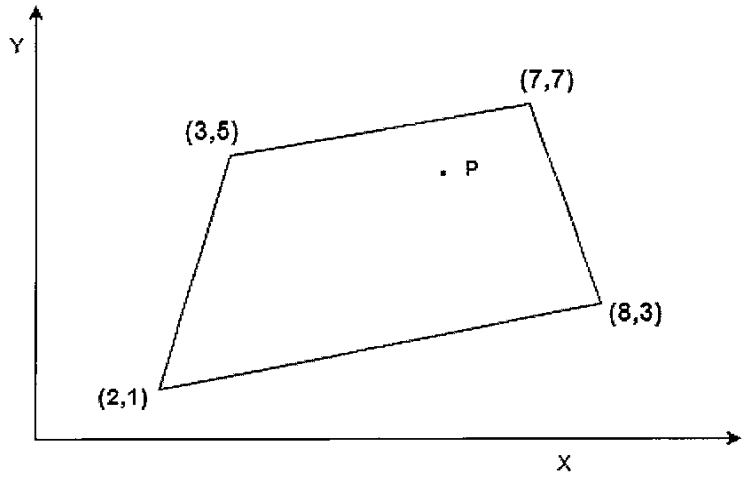

Fig. 2

b) How do you define the 2D elements? Explain the different types of 2D element. **[8]**

Q3) a) Briefly explain the concept of P and H formulation in meshing, and how it use for improving the FEA results accuracy. **[9]**

b) Explain the following terminologies in element meshing **[8]**

i) Aspect ratio

ii) warp angle

OR

Q4) a) Why element quality is checks in necessary in FEA? **[5]**

b) What is the critical region in FEA model? Which are the different way to improve the FEA results accuracy in critical region? **[4]**

c) Explain the following terminologies in element meshing **[8]**

i) Jacobian

ii) Stretch

Q5) a) Compare the linear and non-linear FEA analysis with respective its characteristic and feature. **[10]**

b) Explain Geometric Nonlinearity and Material Nonlinearity related to nonlinear problems. **[7]**

OR

Q6) a) Why is material modelling critical in nonlinear analysis? Explain any type of material model in nonlinear analayis. **[10]**

b) Write the general procedure for non-liner analysis solid mechanics. **[7]**

Q7) a) A brick wall shown in fig.3 has thickness of 0.6m and thermal conductivity of 0.8W/m°K. The inner surface of wall is at 28°C and outer surface is exposed to cold air at -10 °C. The heat transfer coefficient at outer surface is 40 W/m°K. Determine the steady-state temperature distribution within the wall. Considered the two elements. **[12]**

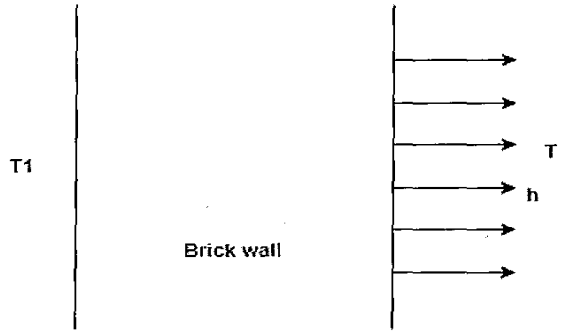

Fig. 3

b) What is the shape function? How it is used in thermal analysis to find the temperature distribution within the wall. **[6]**

OR

Q8) a) The bar shown in Fig. 4 having uniform cross-section with cross-section area A = 50×10^{-6} m^2, length L = 1.5m, modulus of elasticity E = 2×10^{11} N/m^2 and density p = 7800 kg/m^3. Estimate the natural frequency of bar. Model the bar by using two elements. **[12]**

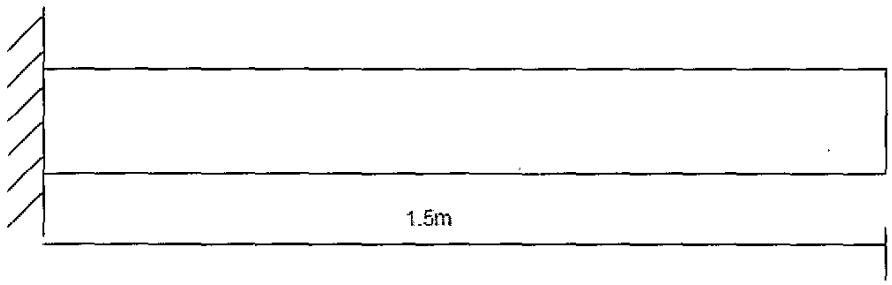

Fig.3

b) Write the short notes on, **[6]**

i) consistence mass matrix

ii) lumped mass matrix?



Total No. of Questions : 8]

SEAT No. : ____

PB2176

[Total No. of Pages : 3

[6263]-9

B.E. (Automobile Engineering)

HYBRID AND ELECTRIC VEHICLE

(2019 Pattern) (Semester-VIII) (416489)

Time : 2½ Hours] ***[Max. Marks : 70***

Instructions to the candidates:

1) ***Assume suitable data if necessary.***
2) ***Answer FOUR questions from the following (Q.1 or Q.2, Q.3 or Q.4, Q.5 or Q.6 and Q.7 or Q.8)***

Q1) a) State any two applications of following EV motors: **[8]**

i) BLDC Motor.

ii) Induction Motor.

iii) PMAC/I-PMAC motor.

iv) Switch Reluctance Motor.

b) Discuss the advantages and disadvantages of using a brushless DC motor in an electric vehicle. **[9]**

OR

Q2) a) How does the choice of motor affect the range and overall performance of an electric vehicle? **[8]**

b) Why internal permanent magnet (IPM) motors are preferably used in electric vehicle? **[9]**

Q3) a) How do lithium iron phosphate (LiFePO4) batteries differ from traditional lithium-ion batteries in electric vehicles? **[10]**

b) Why slow charging is preferred (or fast charging is avoided) in Li-Ion battery. **[8]**

OR

Q4) a) Calculate SOC for 10 second for a pulse of 5Amp current for following given data: **[10]**

i) Total cell capacity=10 Watt-hr,

ii) Cell internal resistance=30 mili-Ohms,

iii) Initial state of charge=85%.

b) Explain the concept of fast charging and its implications for electric vehicle adoption. **[8]**

P.T.O.

Q5) a) What are the primary functions of battery management system (BMS)? **[8]**

b) What are the components of Battery management system? **[9]**

OR

Q6) a) What is the need of Battery Thermal Management System (BTMS)? **[8]**

b) State different methods used in Battery Thermal Management System. Explain any one method with neat sketch. **[9]**

Q7) It is decided to provide equivalent 'Battery Electric Motor' combination for existing 'Hero Honda Splendor' with following specifications:- **[18]**

a) Gross Vehicle Weight (GVW)=205kg,

b) Maximum speed=85kmph,

c) Acceleration=0.7m/s^2 for plane road and 0.49m/s^2 for grade road,

d) Gradability=7°,

e) Radius of wheel=0.292m,

f) Expected Range=54km for EV,

g) Engine Specifications :- Power=5.9kw, Volume = 97.2cc, Max. Torque=8.05Nm@ 6000 RPM,

h) Gear Box:- Four gears with gear ratios G_1=2.92, G_2=1.72, G_3=1.16, G_4=0.9. and Final Drive Reduction=3.5. Also assume Air Density=1.2kg/m^3, Coe. of Drag=0.65, Frontal Area=1.2m^2, Coe. of rolling resistance=0.013.

Calculate:-

i) Motor Power in kW,

ii) Battery Pack capacity in kwhr,

iii) Energy efficiency in Watt-hour/km,

iv) Max. Vehicle speed in kmph, and

v) EV range in km.

OR

Q8) It is decided to design an electric 4-Wheeler with following specifications:-**[18]**

a) Gross vehicle weight (GVW)=1200 kg,

b) Maximum Speed=120 kmph,

c) Acceleration=0 to 120 kmph in 20 seconds,

d) Grade=5º,

e) Radius of wheel=0.31m,

f) Coe. of Drag=0.35,

g) Gear Ratio=9:1,

h) Air Density=1.225kg/m^3,

i) Front Area=2.5m^2,

j) Coe. of rolling resistance=0.013,

k) Speed on grade road=60 kmph,

l) Coe. of Sliding friction=0.3.

Calculate:

i) Motor Power in kW,

ii) Battery Pack Capacity in kwhr,

iii) Energy efficiency in Watt-hour/km,

iv) Actual Max. Vehicle speed in Kmph, and

v) EV range (in km) for plane road at constant speed of 90 kmph.

● ● ●

Total No. of Questions : 8]

SEAT No. : ____

PB-2177

[Total No. of Pages : 3

[6263]-10

B.E. (Automobile Engineering)

AUTOMOTIVE SYSTEM DESIGN

(2019 Pattern) (Semester - VIII) (416490)

Time : 2½ Hours] ***[Max. Marks : 70***

Instructions to the candidates :

1) ***Answer Q.1 or Q.2, Q.3 or Q.4, Q.5 or Q.6, Q.7 or Q.8.***
2) ***Answer four questions from the following :***
3) ***Figures to the right side indicate full marks.***
4) ***Neat diagrams must be drawn wherever necessary.***
5) ***Assume suitable data, if necessary.***

Q1) a) Narrate the design procedure of any one type of Universal joint with sketch. **[9]**

b) One of the engines develops a maximum torque of 162 Nm and the low gear ratio of transmission is 2.75, while the back axle ratio is 4.25. The effective wheel radius is 0.325 m, the coefficient of friction between the tyre and road surface is 0.6. If the permissible shear stress is 323.70 MPa, determine the maximum shaft diameter. Assuming the load is nearly torsional. What is the maximum load on each wheel? **[8]**

OR

Q2) a) One of the engines develops 28 KW at 1500 rpm and its bottom gear ratio is 3.06. if a propeller shaft of 40mm outside diameter is to be used, determine the inside diameter of mild steel tube to be used, assuming a safe shear stress of 55×10^3 KPa for MS. **[8]**

b) Explain the design procedure of propeller shaft with sketch. **[9]**

P.T.O.

Q3) a) Discuss in brief about under steer and over steer. **[6]**

b) In a hydraulic single line braking system the force on foot pedal is 100N, pedal leverage ratio is 4.4, cross sectional area of master cylinder is 4 cm^2 ,cross sectional area of front piston 20 cm^2. Cross sectional area of the rear piston is 5cm^2. Distance moved by effort is 1cm. Calculate the following. **[12]**

i) Front to rear brake ratio

ii) Total force ratio

iii) Distance moved by output

iv) Cylinder movement ratio

v) Total movement ratio

OR

Q4) a) A light motor vehicle has a wheel base of 2.64m, the height of its CG above the ground is 0.61m and it is 1.12 m in front of the rear axle. if the car is travelling at 40km/h on a level track, determine the minimum distance in which the car may be stopped, when, **[12]**

i) The rear wheels are braked

ii) The front wheel are braked

iii) All wheels are braked

b) What is the braking efficiency? Explain in detail. **[6]**

Q5) a) A semi elliptic type spring has leaves of 75 mm width and 10 mm thickness, effective length is 900 mm. If the stress is not to exceed 220.725 MPa, when the spring is loaded to 4905 N. Estimate the required number of leaves and the deflection under this condition. If the spring is just flat under load, what is the initial radius? Take E=196.2 GPa. **[10]**

b) Explain the general design considerations of suspension system. **[7]**

OR

Q6) Discuss on : **[17]**

a) What is nipping in leaf springs?

b) Brake fade and Brake torque.

c) Brake balance and Braking efficiency.

d) Components used in hydraulic brake system

Q7) Design a Tensile Bar for Minimum Cost of the following materials. Assume Factor of Safety of 1.8. **[18]**

Material	Mass density (Kg/m^3)	Yield strength (MPa)	Material cost Rs/N
Steel	3000	16	130
Al alloy	3000	32	50
Magnesium alloy	2100	32	20

Length of the bar is 175mm and a constant tensile load on bar is of 4000N.

OR

Q8) a) Explain the following. **[12]**

i) Optimum and adequate design.

ii) Significance of free variable and constrained variable in Johnson's method of optimum design.

iii) Design for natural tolerances.

b) Narrate the aspects of Aesthetic Design. **[6]**

▽▽▽▽

Total No. of Questions : 8]

SEAT No. :

PB2178

[Total No. of Pages : 2

[6263]-11

B.E. (Automobile Engineering)

ALTERNATIVE FUELS AND EMISSION CONTROL

(2019 Pattern) (Semester - VIII) (416491A) (Elective - V)

Time : 2½ Hours] *[Max. Marks : 70*

Instructions to the candidates:

1) *Neat diagrams must be drawn wherever necessary.*
2) *Figures to the right indicate full marks.*
3) *Assume suitable data if necessary.*

Q1) a) What are the various vegetable oils and write their important properties. **[8]**

b) Explain the Nano fluids, additives and cetane improvers for performance improvement of vegetable oils? **[9]**

OR

Q2) a) What are the different methods of using vegetable oils for engines? **[8]**

b) Write a short on Blending, preheating, Transesterification and emulsification of vegetable oils. **[9]**

Q3) a) Explain production methods of Biogas? **[9]**

b) Performance and emission characteristics of Biogas, NG and LPG in SI and CI engines? **[9]**

OR

Q4) a) What are the properties natural gas and LPG.? **[9]**

b) What do mean by CO_2 and H_2S scrubbing in Biogas. Why biogas Modification required to use in SI and CI Engines. **[9]**

Q5) a) What are sources of pollution and various emissions from automobiles. **[8]**

b) Write a short note on Emission analyzers. **[9]**

OR

P.T.O.

Q6) a) Explain effects of pollutants on environment human beings. How it reduced by Emission Control Techniques. **[9]**

b) Write a short note on : **[8]**

i) Constant Volume Sampling 1 and 3 (CVSI & CVS3) Systems.

ii) Seven mode and thirteen mode cycles for Emission Sampling.

Q7) a) Explain emission formation in SI Engines. **[9]**

b) Explain formation of Black Smokes, NOx, soot, Sulphur particulate. **[9]**

OR

Q8) a) Explain the effects of design and operating variables on emission formation. **[9]**

b) Write a short note on : **[9]**

i) EGR

ii) HCCI

iii) Cetane Number Effect

Total No. of Questions : 8]

SEAT No. :

PB2179

[Total No. of Pages : 2

[6263]-12

B.E. (Automobile Engineering)

RENEWABLE ENERGY

(2019 Pattern) (Semester - VIII) (416491B) (Elective - V)

Time : 2½ Hours] *[Max. Marks : 70*

Instructions to the candidates:

1) *Answer Q1 or Q2, Q3 or Q4, Q5 or Q6, Q7 or Q8.*
2) *Neat diagrams must be drawn wherever necessary.*
3) *Figures to the right side indicate full marks.*

Q1) a) Describe with neat sketch the working of wind energy conversion system (WECS) with main components. **[9]**

b) Classify wind-turbines used to Extract with energy. Explain the different types in brief. **[9]**

OR

Q2) a) Elaborate on the concept of Wind farm with block/neat diagram. **[9]**

b) What are the advantages and disadvantages of wind energy systems. **[9]**

Q3) a) Describe a liquid dominated geothermal power plant with neat sketch. **[9]**

b) What are different types of Geothermal energy Resources? Explain any two in details. **[8]**

OR

Q4) a) Describe a Hybrid conventional and geothermal power plant with neat sketch. **[9]**

b) What are the main applications of Geothermal Energy? Explain any two in details. **[8]**

Q5) a) Draw the sketches of any three types of biogas plants. **[9]**

b) What is Gasifier? Describe Down-draught Gasifier with neat sketch. **[9]**

OR

P.T.O.

Q6) a) Describe MHD closed cycle system with its advantage and disadvantages. **[9]**

b) Write a note on Fluidized Bed combustion Boiler (FBCB). **[9]**

Q7) a) Write a note on small hydel power plant. **[9]**

b) What are advantages and limitations of Ocean Energy. **[8]**

OR

Q8) a) Explain the basic principles of ocean thermal energy conversion system (OTEC) and explain closed cycle OTEC system with neat sketch. **[9]**

b) Explain different Ocean Energy Resources in brief. **[8]**

Total No. of Questions : 8]

SEAT No. :

PB-2180

[Total No. of Pages : 2

[6263]-13

B.E. (Automobile Engineering)

TRANSPORT MANAGEMENT AND AUTOMOBILE INDUSTRY

(2019 Pattern) (Semester - VIII) (416492A) (Elective-VI)

Time : 2½ Hours] *[Max. Marks : 70*

Instructions to the candidates:

1) ***Answer Q.1 or Q.2, Q.3 or Q.4, Q.5 or Q.6, Q.7 or Q.8.***
2) ***Neat diagrams must be drawn wherever necessary.***
3) ***Figures to the right indicate full marks.***

Q1) a) Explain Objectives of taxation. **[6]**

b) Why road tax is levied on vehicle. **[6]**

c) Explain one Time tax for Maharashtra State. **[6]**

OR

Q2) a) Write Short notes on taxations. **[6]**

b) Explain the structure and method of Taxation. **[6]**

c) Who are the exempted from tax payment & why? **[6]**

Q3) a) Explain different types of Traffic Signs? **[6]**

b) Explain importance insurance. **[5]**

c) What is third party insurance? **[6]**

OR

Q4) a) Explain types of motor vehicle insurance. **[6]**

b) Explain zero depth insurance. **[6]**

c) Distinguish between Insurance & Assurance. **[5]**

P.T.O.

Q5) a) Explain the functions of good transport organization with the structure. **[9]**

b) Describe the schedule structure of good transport organization. **[8]**

OR

Q6) a) Describe basic element of transport system. **[8]**

b) What is the procedure for transportation of petroleum product? **[9]**

Q7) a) Explain seven quality tools. **[6]**

b) Explain Bharat NCAP. **[6]**

c) Explain Automotive Industry standards. **[6]**

OR

Q8) a) Explain Quality Circle. **[6]**

b) Explain JIT system. **[6]**

c) Benefits of ISO14001 certification. **[6]**

⌘⌘⌘

Total No. of Questions : 8]

SEAT No. :

PB-2181

[Total No. of Pages : 2

[6263]-14

B.E. (Automobile Engineering)

AUTOMOTIVE SAFETY

(2019 Pattern) (Semester - VIII) (416492B) (Elective-VI)

Time : 2½ Hours] *[Max. Marks : 70*

Instructions to the candidates:

1) ***Answer Q.1 or Q.2, Q.3 or Q.4, Q.5 or Q.6, Q.7 or Q.8.***
2) ***Neat diagrams must be drawn wherever necessary.***
3) ***Figures to the right side indicates full marks.***

Q1) a) Explain the injury tolerance and deceleration curves in crashworthiness. **[9]**

b) Compare the pole testing with rollover testing of a vehicle. **[8]**

OR

Q2) a) Explain the volunteer testing and cadaver testing for adult passengers in a sports utility vehicle. **[9]**

b) Describe the competitive race testing for a sports car. **[8]**

Q3) a) Explain the five steps of occupant package development process. **[10]**

b) Describe the ergonomic development of a vehicle with human modelling predictions with the help of neat sketches. **[8]**

OR

Q4) a) Explain the strategies for improving occupant accommodation and comfort in a car. **[9]**

b) Discuss the Vehicle Seating Configuration for a multi utility vehicle as per SAE Norms. **[9]**

P.T.O.

Q5) a) Design a Hybrid III Dummy as per safety standards. **[9]**

b) Discuss the simulation with pedestrian simulation tests. **[8]**

OR

Q6) a) Describe the CRABI Infant Dummies and Side Impact Dummies. **[9]**

b) Explain the Real Human Body Modelling. **[8]**

Q7) a) Explain the active suspension system **[9]**

b) Describe the working of forward collision warning system. **[9]**

OR

Q8) a) Explain the working of blind spot alert system. **[9]**

b) Discuss the working of automotive collision avoidance system. **[9]**

⌘⌘⌘

Total No. of Questions : 8]

SEAT No. :

PB-2182

[Total No. of Pages : 2

[6263]-15
B.E.(Automobile Engineering)
PROCESS PLANNING & COST ESTIMATION
(Elective - VI) (2019 Pattern) (Semester - VIII) (416492 C)

Time : 2½ Hours] ***[Max. Marks : 70***

Instructions to the candidates:

1) ***Neat diagrams must be drawn wherever necessary.***
2) ***Figures to the right side indicate full marks.***
3) ***Assume suitable data if necessary.***

Q1) a) What are the purposes of cost accounting? **[9]**

b) Explain elements of cost in detail. **[9]**

OR

Q2) a) Differentiate between cost estimating and cost accounting. **[9]**

b) Explain cost estimation procedure in detail. **[9]**

Q3) a) Explain various methods used in industry for allocation of overheads. **[8]**

b) Explain Selling and Distribution Expenses in detail. **[9]**

OR

Q4) a) Explain Straight Line Depreciation Method in detail. **[8]**

b) An electric fan is available in the market at a catalogue price of Rs. 1500. The discount allowed to the distributor is 12 percent. Administrative and sales overheads are 80 percent of Factory cost. The direct material cost, direct labour cosi and factory overheads are in the ratio of 1:3:2 respectively. If thc direct labour cost is Rs. 300 and the central excise duty 10 percent of the selling price, determine the company's profit on each item. **[9]**

Q5) a) A factory produces two components X and Y. Component X requires 20 hours and is manufactured by the workers paid at the rate of Rs. 10 per hour, while component Y also requires 20 hours but the workers producing it are paid at the rate of Rs. 7.5 per hour. Find out the on-cost of each component, if **[8]**

i) It is 40% of direct labour cost,

ii) Rs. 2 per man-hour.

b) Explain cost estimation procedure for welding shop in detail. **[9]**

P.T.O

OR

Q6) a) Explain labour cost estimation procedure in detail. **[8]**

b) The following product is manufactured by forging process from a block of cast iron. Find the weight of the material required for the block if cast iron weighs 7 gms/cm^3. **[9]**

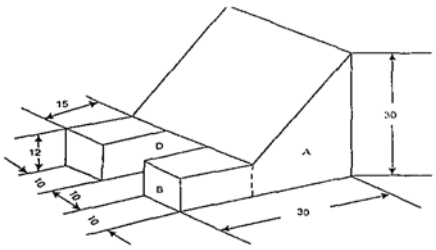

Q7) a) Explain importance of machining time calculation in detail. **[9]**

b) A 300 mm x 50 mm rectangular cast iron piece is to be face milled with a carbide cutter. The cutting speed and feed are 50 m/min and 50 mm/min. If the cutter dia is 80 mm and it has **[9]**

12 cutting teeth, determine:

i) Cutter r.p.m.

ii) Feed per tooth

iii) Milling time

OR

Q8) a) Calculate the machining time to turn the dimensions shown in figure starting from a ms bar of 100 mm. The cutting speed with HSS tool 80 mpm and feed is 0.8 mm/rev., depth of cut is 3 mm per pass. **[9]**

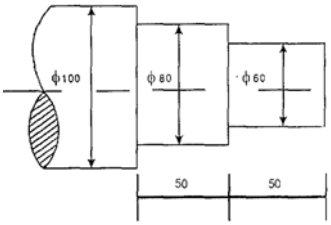

b) An ms shaft shown in figure is to be turned from a 25 bar. Speed is 60 m/min., feed is 0.2 mm/rev. Calculate the machining time feed for drilling is 0.08 mm/rev., feed for knurling is 0.3 mm/rev. **[9]**

☺☺☺

Total No. of Questions : 8]

SEAT No. :

PB2183

[Total No. of Pages :2

[6263]-16
Final Year B.E.
BIOTECHNOLOGY
Biochemical Engineering
(2019 Pattern) (Semester- VII) (415461)

Time : 2½ Hours] ***[Max. Marks : 70***

Instructions to the candidates:

1) ***Answer Q1 or Q2, Q3 or Q4, Q5 or Q6, Q7 or Q8.***
2) ***Neat diagrams must be drawn wherever necessary.***
3) ***Figures to the right side indicate full marks.***
4) ***Assume Suitable data if necessary.***

Q1) a) Why is it necessary to maintain positive pressure inside the fermenter? How negative pressure affects performance of fermenter? **[9]**

b) Write a short note on pH measurement system with diagram? Explain importance of deadband in pH measurement system. **[9]**

OR

Q2) a) Draw a neat sketch of a fermenter. Write functions and importance of various fittings and three major auxiliaries. **[12]**

b) Give datailed effect of rheological properties in fermentation operations depending on various types of fermentation media used in fermenters.**[6]**

Q3) a) Describe effect of dissolved oxygen concentration on specific oxygen uptake rate. How is it correlated with Michelis-Menten kinetics curve? **[9]**

b) What is the role of sparger and baffles in fermenter design? What are the types of spargers used for better aeration? **[8]**

OR

Q4) a) What is critical concentration (C_{crit}) on DO concentration curve and how it affects growth of microorganisms? **[8]**

b) Explain case study on production of amino acids by using B. Flavin. **[9]**

P.T.O.

Q5) a) Explain terms:

i) Compatibility of the equipment

ii) Process evaluation and validation **[10]**

b) What is scale up and scale down approach? How is it used in industries? **[8]**

OR

Q6) Consider the scale up of fermentation from a 10 L to 10,000 L vessel. The small fermenter has height to diameter ratio of 3. The impeller diameter is 25% of the tank diameter. Agitator speed is 500 rpm and three Rushton impellers are used. Determine the dimensions of the large fermenter and agitator speed for:

a) Constant P/V

b) Constant Impeller Tip speed

c) Constant Reynolds Number **[18]**

Q7) a) What are types of immobilized cell reactors? Draw sketches and explain in detail. **[9]**

b) Write a short note on alginate and carrageenen covalent gel and its one application. **[8]**

OR

Q8) a) Give one detailed case study on animal cell reactor. **[9]**

b) What are semisynthetic processes? Why in the case of antibiotics or drug formulations semi synthetic processes are preferred? **[8]**

Total No. of Questions : 8]

SEAT No. :

PB-2184

[Total No. of Pages : 2

[6263]-17
B.E. (Biotechnology)
BIOINFORMATICS
(2019 Pattern) (Semester - VII) (415462)

Time : 2½ Hours] *[Max. Marks : 70*

Instructions to the candidates:

1) ***Answer Q1or Q2, Q3 or Q4, Q5 or Q6, Q7 or Q8.***
2) ***Neat diagrams must be drawn wherever necessary.***
3) ***Figures to the right side indicate full marks.***

Q1) a) Write a note on Data mining? Explain its application in protein sequences. **[9]**

b) Describe the concept of active sites in enzymes and their importance in catalysis. How does the secondary structure composition of a protein affect its function? **[9]**

OR

Q2) a) Explain the Ramachandran plot and its significance in the analysis of protein structures. **[9]**

b) Compare and contrast the primary protein databases UNIPROT and TrEMBL. Provide details on the description of entries and sequence data files. Share a sample sequence data file and discuss its representation. **[9]**

Q3) a) Explain the concepts and methods involved in secondary and tertiary structure prediction of proteins, including their applications in proteomics. **[9]**

b) Define the field of proteomics and its importance in studying proteins on a large scale. Discuss the challenges and benefits of proteomics research. **[8]**

OR

Q4) a) Explain the significance of secondary protein databases such as PROSITE, PRINTS, and BLOCKS in bioinformatics. Describe the concepts of patterns, motifs, and profiles in these databases. Provide examples of how these databases aid in the analysis of protein sequences and structures. **[9]**

P.T.O.

b) Which are the various tools used for protein structure visualization, such as Rasmol, Jmol, and PyMOL. Explain their features and capabilities in visualizing protein structures. **[8]**

Q5) a) Describe the significance of scoring matrices in sequence alignment, focusing on PAM and BLOSUM matrices. Explain how these matrices are constructed and used in sequence alignment algorithms. **[8]**

b) Describe the concept of gap penalties in sequence alignment. Explain how the introduction of gap penalties affects alignment results and why they are crucial for accurate sequence alignment. Discuss the trade-offs involved in choosing gap penalties and their impact on the alignment quality. **[10]**

OR

Q6) a) Discuss heuristic alignment algorithms and their role in speeding up sequence alignment processes. Provide insights into how these algorithms balance speed and accuracy. **[10]**

b) Describe the principles of dot plot analysis in the context of sequence alignment. Explain how dot plots are generated and how they can be used to identify regions of similarity or dissimilarity in sequences. Provide a practical example of creating a dot plot for two given sequences. **[8]**

Q7) a) What is the difference between Dendogram and Phylogenetic Tree? **[8]**

b) Explore the elements of phylogenetic models and their role in understanding evolutionary relationships. Define and differentiate between homologs, orthologs, and paralogs. Provide examples of how the knowledge of these concepts is crucial in building accurate phylogenetic trees. **[9]**

OR

Q8) a) Discuss the importance of sequence alignment, substitution models, and parsimony in the process. Explain how researchers determine the appropriate substitution model and the significance of this choice in phylogenetic predictions. **[8]**

b) Differentiate between rooted and unrooted trees and provide examples of their applications in phylogenetic analysis. **[9]**

Total No. of Questions : 8]

SEAT No. : [ ]

PB4474

[Total No. of Pages : 2

[6263]-19 R
B.E.
BIOTECHNOLOGY
Environmental Biotechnology
(2019 Pattern) (Semester-VII) (415463 B) (Elective-III)

Time : 2½ Hours] ***[Max. Marks : 70***

Instructions to the candidates:

1) ***Attempt Q1 or Q2, Q3 or Q4, Q5 or Q6, Q7 or Q8.***
2) ***Neat diagrams must be drawn whenever necessary.***
3) ***Figures to the right side indicate full marks.***
4) ***Use of calculator is allowed.***
5) ***Asssume suitable data, if necessary.***

Q1) Answer the following: **[18]**

a) How do treatment strategies for industrial effluents from the textile industry differ when dealing with synthetic dyes versus natural dyes?

b) Discuss the role of advanced treatment technologies, such as membrane filtration, in improving the treatment efficiency of effluents.

OR

Q2) Answer the following: **[18]**

a) Explain the challenges and considerations when designing a neutralization system for a specific industrial application.

b) Discuss the advantages and limitations of chemical treatment strategies for industrial effluents.

Q3) Answer the following. **[17]**

a) Differentiate between the cleaning techniques electrostatic and wet scrubbing methods used for controlling particulate pollution.

b) Explain the fundamental design and operating principles of a settling chamber.

OR

Q4) Answer the following: **[17]**

a) What are the challenges involved in implementing algae-based CO_2 sequestration on a large scale.

b) Differentiate between centrifugal scrubbers, and venturi scrubbers applied in the removal of gaseous pollutants from industrial emissions.

P.T.O.

Q5) Answer the following: **[18]**

a) Explain the biotechnological approaches that can be employed to detoxify waste containing cyanide.

b) What are the challenges and health risks associated with hospital waste management?

OR

Q6) Answer the following: **[18]**

a) How do sanitary landfills contribute to environmental issues, and what measures can be taken to mitigate their impact?

b) Define the concept of waste minimization and its significance in sustainable waste management practices.

Q7) Answer the following: **[17]**

a) Discuss the process of composting as a bioremediation method and its potential applications for organic waste.

b) Differentiate between in situ and ex situ bioremediation approaches.

OR

Q8) Answer the following: **[17]**

a) What are the benefits of membrane-based processes for wastewater treatment?

b) What is Agaricomycetes and how can it be used for bioremediation of soil contaminated with crude oil?

● ● ●

Total No. of Questions : 8]

SEAT No. : ____

PB2186

[Total No. of Pages : 2

[6263]-20

B.E.

BIOTECHNOLOGY

Genomics

(2019 Pattern) (Semester-VII) (Elective-III) (415463C)

Time : 2½ Hours] ***[Max. Marks : 70***

Instructions to the candidates:

1) ***Solve Q.1 or Q.2, Q.3 or Q.4, Q.5 or Q.6, Q.7 or Q.8.***
2) ***Figures to right indicate full marks.***
3) ***Asssume suitable data, if necessary.***

Q1) a) With the help of flowchart show the steps in cDNA synthesis. **[6]**

b) How would you detect presence of a particular mRNA in a given sample? **[6]**

c) Explain the role of Drosha and Dicer in miRNA maturation. **[6]**

OR

Q2) a) Design microarray experiment to detect differential gene expression in normal and Alzheimer's brain tissue. **[12]**

b) Write a note on qPCR. **[6]**

Q3) a) Discuss the DNA methylation as a significant epigenetic mechanism. **[10]**

b) What are histone variants? Explain any 2 of them. **[7]**

OR

Q4) a) Write short notes on any three (Five marks each) **[15]**

i) Chromatin architecture,

ii) DNA methyl transferases (DNMT),

iii) Model organism,

iv) RNA interference

b) What are histones? **[2]**

P.T.O.

Q5) a) Write a note on Drug metabolism in liver. **[6]**

b) What are the major factors affecting individual drug response. **[6]**

c) Briefly explain Genetic Polymorphisms of drug-metabolizing enzymes. **[6]**

OR

Q6) a) Personalized medicine is a future of medicine-justify. **[12]**

b) Enlist the technologies used in Pharmacogenomics. **[6]**

Q7) a) Discuss Diet, Genes and disease in a trialogy of Nutrigenomics. **[12]**

b) What are nutrigenetics and nutrigenomics? **[5]**

OR

Q8) a) Describe the major strategies presently adopted in Nutrigenomics research. **[12]**

b) What is phenotype plasticity? **[5]**

● ● ●

Total No. of Questions : 8]

SEAT No. :

PB-2187

[Total No. of Pages : 2

[6263]-22
B.Tech.(Biotechnology)
NANOTECHNOLOGY
(2019 Pattern) (Semester - VII) (415464B) (Elective - IV)

Time : 2½ Hours] ***[Max. Marks : 70***

Instructions to the candidates:

1) ***Answer Q1 or Q2, Q3 or Q4, Q5 or Q6, Q7 or Q8.***
2) ***Neat diagrams must be drawn wherever necessary.***
3) ***Figures to the right side indicate full marks.***
4) ***Assume suitable data if necessary.***

Q1) a) Explain in detail the application of nanotechnology in the field of vaccination. **[6]**

b) Explain in detail about drug targeting and drug delivery system in to respiratory. **[6]**

c) Discuss the key role of nanoparticle in detection of infections diseases. **[6]**

OR

Q2) a) What is targeted drug delivery system? Discuss. **[6]**

b) Explain in detail the application of nanotechnology in the field of Gene therapy. **[6]**

c) Discuss the advantages of nanotechnology in drug targeting. **[6]**

Q3) a) Discuss about principle of biosensors. **[4]**

b) What are nanodevices? Discuss its ideal characteristics. **[6]**

c) Discuss in details the application of sensors in cardiology. **[7]**

OR

Q4) a) Discuss the working and generation of biosensor in details. **[8]**

b) Explain in details about optical nanosensor and pressure nanosensors used for biomedical application. **[9]**

P.T.O

Q5) a) What are the types of biochips? Discuss in details any two. **[10]**

b) Discuss in detail bout miniaturization of biosensors? **[8]**

OR

Q6) a) Write a detail note on Optical biosensor. **[8]**

b) Discuss the Working Principle of a Biochip. **[10]**

Q7) a) What are the potential risks and benefits of nanobiotechnology for human health? Discuss. **[7]**

b) Write a details note on enzyme based biosensors. **[7]**

c) What is conductometric biosensors? **[3]**

OR

Q8) a) Explain in detail the design of biosensor. **[10]**

b) Discuss in detail about a fuel cell? **[7]**



Total No. of Questions : 8] **SEAT No. :**

PB-2188

[Total No. of Pages : 2

[6263]-23
B.E. (Biotechnology)
Stem Cell Biology and Regenerative Medicine
(Semester - VII) (2019 Pattern) (Elective - IV) (415464 - C)

Time : 2½ Hours] ***[Max. Marks : 70***

Instructions to the candidates:

1) ***Answer Q1 or Q2, Q3 or Q4, Q5 or Q6, Q7 or Q8***
2) ***Figures to the right side indicate full marks.***
3) ***Assume Suitable data if necessary.***

Q1) a) Describe the techniques in characterization of stem cells. **[6]**

b) Explain in detail about the process of isolation of stem cells with neat sketch. **[6]**

c) Describe the process of regeneration of stem cells in axolotl. **[6]**

OR

Q2) a) Write in detail about transdifferentiation involved in stem cells. **[6]**

b) Write in detail about tissue regenerative capacity of adult stem cells or mammals. **[6]**

c) Describe the process of regeneration of stem cells in planaria. **[6]**

Q3) a) Explain about guidelines for stem cells therapy and clinical trials in India. **[9]**

b) Discuss in detail about embryo ethics. **[8]**

OR

P.T.O.

Q4) a) Explain in detail about egg donation ethics. **[9]**

b) Write detail note on stem cell interventions in stem cell translations. **[8]**

Q5) a) Write short note on 3D polymeric scaffold, porous microsphere scaffolds. **[8]**

b) What are leveraging tools are used to study stem cell biology explain it in detail. **[10]**

OR

Q6) a) Explain the phenomenon of In vitro cultures of adult stem cells to analyse differentiation and other properties. **[10]**

b) Discuss the in vivo tools in stem cell biology, **[8]**

Q7) a) Write detail note on Cell replacement therapies includes disease modeling & drug screening. **[8]**

b) Describe the various clinical applications of stem cells by considering regenerative property. **[9]**

OR

Q8) a) Discuss about in-vivo transdifferentiation in cardiac fibroblasts into cardiomyocytes. **[8]**

b) Describe the clinical translation process of stem cell technologies. **[9]**



Total No. of Questions : 8]

SEAT No. : ____

PB2189

[Total No. of Pages : 2

[6263]-24

B.E.

BIOTECHNOLOGY

Bioprocess Modeling and Simulation

(2019 Pattern) (Semester-VIII) (415471)

Time : 2½ Hours] ***[Max. Marks : 70***

Instructions to the candidates:

1) ***Answer Q1 or Q2, Q3 or Q4, Q5 or Q6, Q7or Q8.***
2) ***Neat diagrams must be drawn wherever necessary.***
3) ***Figures to the right side indicate full marks.***
4) ***Assume Suitable data if necessary.***

Q1) a) Write a short note on rigid and stochastic process with one example. **[9]**

b) What are boundary conditions? Why there is a need to build models based on boundary conditions? **[9]**

OR

Q2) a) Describe any batch process and give total and component continuity model equations for the same. **[9]**

b) How models are classified based on state of the processes? Illustrate with one example of each. **[9]**

Q3) a) Consider a perfectly mixed simple reactor with two components biomass and substrate. The biomass consumes substrate inside the reactor. Assuming volume of the reactor remains constant. Draw a neat sketch and write component balance equations for biomass and substrate. **[9]**

b) Differentiate between batch and fedbatch reactor and also give detailed approach to model these reactors. **[8]**

OR

Q4) a) Write a short note on modelling a continuous culture in Chemostat with recycle. **[8]**

b) Explain in detail types of product formation kinetics with profiles. **[9]**

P.T.O.

Q5) a) Draw neat sketches and differentiate between agitated and sparged bioreactors. **[9]**

b) Write a short note on bubble column plug flow reactor with an appropriate modelling equations. **[9]**

OR

Q6) a) Consider the gas liquid second order reaction inside the fluidised bed reactor as given below

$$aA(g \rightarrow l) + bB(l) \rightarrow R(s \text{ or } l \text{ or } g), \qquad -r_A = kC_AC_B$$

Draw a neat sketch and write model equations giving total mass transfer resistance and rate of reaction. **[9]**

b) What is liquid and gas holdup inside the packed bed reactor? How does it affect the porosity inside the reactor? **[9]**

Q7) a) Draw a neat sketch of a binary distillation process. State the assumptions and develop the equations describing rectification section, stripping section and overall binary distillation system. **[9]**

b) Develop the model equations for a single batch extraction process containing two immiscible liquid phases and Q as the rate of transfer in an extractor.**[8]**

OR

Q8) a) Consider a non-isothermal CSTR where liquid in a jacketed vessel is stirred by an agitator whose mass is significant compared with the reaction mass. The mass of the reactor wall and the mass of the jacket wall are also significant. Write energy equations for the following system neglecting radial temperature gradient in the agitator, reactor wall and jacket wall**[12]**

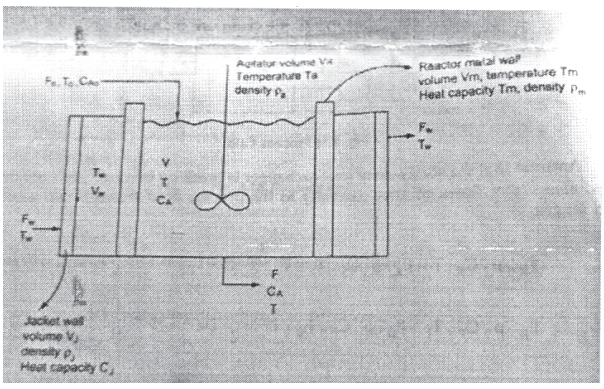

b) Write a short note on challenges observed in modelling of various unit operations with one case study. **[5]**

● ● ●

Total No. of Questions : 8]

SEAT No. :

PB-2190

[Total No. of Pages : 2

[6263]-25

Final Year B.Tech. (Biotechnology)

PLANT ENGINEERING AND PROJECT COSTING

(2019 Pattern) (Semester - VIII) (415472)

Time : 2½ Hours] ***[Max. Marks : 70***

Instructions to the candidates :

1) ***Answer Q.1 or Q.2, Q.3 or Q.4, Q.5 or Q.6, Q.7 or Q.8.***
2) ***Neat diagrams must be drawn wherever necessary.***
3) ***Figures to the right side indicate full marks.***
4) ***Assume suitable data, if necessary.***

Q1) a) Draw a symbolic representation of : **[6]**

i) Control ball valve

ii) Gear pump

iii) Centrifugal pump

iv) Turbine

v) Pneumatic valve

vi) Butterfly valve

b) Draw a neat piping and instrumentation diagram (P & ID) representation for any batch reactor. **[6]**

c) Discuss in detail the importance of piping and instrumentation diagram (P & ID). **[6]**

OR

Q2) a) Comment on equipment elevation in piping and instrumentation diagram (P & ID). **[6]**

b) What is the importance of pipe sizing in process piping design? Discuss. **[6]**

c) How wall thickness and pipe schedule is calculated? **[6]**

P.T.O.

Q3) a) Discuss in detail about : Plant start up and plant shutdown procedure. **[10]**

b) Enlist various treatment process used in biochemical process industry. Explain any one. **[7]**

OR

Q4) a) Why plant maintenance is important? Discuss in detail. **[7]**

b) Write a detail note on: Planning and scheduling about maintenance in biotech/chemical industry. **[10]**

Q5) a) State and explain any two methods for capital cost estimate. **[8]**

b) Explain one method of charging depreciation. **[5]**

c) Write a detail note about cost indexes. **[5]**

OR

Q6) a) Explain simplified cash flow procedure used in any manufacturing plant. **[6]**

b) Explain the detail order of magnitude estimate method for estimating capital investment. **[8]**

c) What is simple interest and compound interest? **[4]**

Q7) a) Write advantages and disadvantages of CPM and PERT. **[6]**

b) Explain rate of return on investment method used for calculating profitability. **[7]**

c) Discuss about Turnover Ratio. **[4]**

OR

Q8) a) Explain return on investment and payback period method with example. **[10]**

b) What is effect of inflation on profitability analysis? Discuss. **[7]**

▽▽▽▽

Total No. of Questions : 8]

SEAT No. :

PB2191

[Total No. of Pages : 2

[6263]-27

B.E. (Biotechnology)

MOLECULAR DIAGNOSTICS

(2019 Pattern) (Semester - VIII) (415473 B) (Elective - V)

Time : 2½ Hours] *[Max. Marks : 70*

Instructions to the candidates:

1) ***Solve Q1 or Q2, Q3 or Q4, Q5 or Q6, Q7 or Q8.***
2) ***Figures to the right indicate full marks.***
3) ***Assume suitable data if necessary.***

Q1) a) Enlist immunoassays based on antigen-antibody interactions with its principle, advantages and limitations. **[9]**

b) Short note on : **[9]**

i) Human Leukocyte Antigens (HLA)

ii) Fluorescent antibody test

OR

Q2) a) What are monoclonal antibodies? How are they produced and used in medical applications? **[9]**

b) Explain principle and uses of ELISA technique in molecular diagnositcs? **[9]**

Q3) a) What is the difference between direct and indirect methods for molecular diagnosis of bacterial diseases? **[9]**

b) Short notes on : **[8]**

i) GMO Detection

ii) Plant Pathogen Detection Techniques

OR

Q4) a) Describe traditional & advanced technologies for microbial identification with strain typing. **[9]**

b) Give some examples of methods and applications of infections disease diagnosis for viral pathogens. **[8]**

P.T.O.

Q5) a) What are genetic diseases? Discuss the different types of genetic diseases. **[8]**

b) Describe molecular diagnostic methods for Trisomy Syndrome. **[10]**

OR

Q6) a) How can a disease with mutations at different sites within one gene be detected? Example with the help of one example. **[10]**

b) Describe prenatal diagnosis methods with its applications. **[8]**

Q7) a) Theoretically design Point Of Care (POC) devices for diagnosis of diseases. **[8]**

b) Write principle and applications of enzyme-based biosensors with examples. **[9]**

OR

Q8) a) How Lab on CHIP Technology used in diagnostics? **[8]**

b) Explain applications of Transcriptomics in molecular diagnostics. **[9]**



Total No. of Questions : 8]

SEAT No. :

PB2192

[Total No. of Pages : 2

[6263]-28

B.E. (Biotechnology)

BIO-THERAPEUTICS TECHNOLOGY

(2019 Pattern) (Semester - VIII) (415473 C) (Elective - V)

Time : 2½ Hours] *[Max. Marks : 70*

Instructions to the candidates:

1) ***Solve Q1 or Q2, Q3 or Q4, Q5 or Q6, Q7 or Q8.***
2) ***Figures to the right indicate full marks.***
3) ***Assume suitable data if necessary.***

Q1) a) How do you produce monoclonal antibodies? Give 2 examples of commercially produced MABs. **[12]**

b) What is Herceptin? What is it used for? **[6]**

OR

Q2) a) Discuss the role of transgenic plants as a potential source of recombinant Biopharmaceuticals. **[10]**

b) Write short notes on : **[8]**

i) Gene gun method,

ii) Immunotoxins

Q3) a) Give an overview of generation of purified water and WFI. **[12]**

b) Write a note on CDS **[5]**

OR

Q4) a) Write a detailed note on microbial cell fermentation for Biopharmaceutical production. **[9]**

b) Enlist the rage of QC tests carried on typical biopharmaceuticals. **[8]**

P.T.O.

Q5) a) Enlist the routes of drug administration and give examples of formulations. **[8]**

b) Write notes on : (Five marks each) **[10]**

i) Transdermal drug delivery,

ii) Accelerated stability

OR

Q6) a) Discuss the advantages of advanced drug delivery systems. **[12]**

b) Write a note on stability of drugs and stabilizing agents. **[6]**

Q7) a) Write notes on : **[10]**

i) CGMP,

ii) Role of DCGI

b) What is patentability **[7]**

OR

Q8) a) Discuss the organization structure of FDA and responsibilities of FDA. **[10]**

b) Write a note on clinical trial phases. **[7]**



Total No. of Questions : 8]

SEAT No. :

PB-2193

[Total No. of Pages : 2

[6263]-29

B.E. (Biotechnology)

MANAGEMENT AND ENTREPRENEURSHIP

(2019 Pattern) (Semester - VIII) (415474A) (Elective-VI)

Time : 2½ Hours] *[Max. Marks : 70*

Instructions to the candidates:

1) ***Answer Q.1 or Q.2, Q.3 or Q.4, Q.5 or Q.6, Q.7 or Q.8.***
2) ***Neat diagrams must be drawn wherever necessary.***
3) ***Figures to the right indicates full marks.***
4) ***Assume Suitable data if necessary***

Q1) a) Comment on: The benefits that occurred by establishing and maintaining strong coordination mechanisms. **[6]**

b) Discuss the different leadership styles commonly employed in organizations. **[6]**

c) Discuss about the importance of communication in an organization. **[6]**

OR

Q2) a) What is Directing? Discuss in detail in term of entrepreneurship. **[6]**

b) What is the meaning of directing in the context with organizational management? **[6]**

c) Write a short note on: **[6]**

i) Leadership styles

ii) Motivation theories

Q3) a) How to identify a business opportunity? Discuss. **[5]**

b) Give some of the examples of achievements of women as entrepreneurs? **[7]**

c) What are the developmental steps of entre in entrepreneurial process **[5]**

OR

Q4) a) Write a detail note on: Ancillary Industry **[7]**

b) Define Entrepreneurship? Also discuss about an entrepreneur. **[5]**

c) How did the concept of entrepreneurship evolve? Discuss in detail. **[5]**

P.T.O.

Q5) a) Write a detail note on : Government policy towards Small Scale Industry. **[6]**

b) What are the advantages and disadvantages of small scale industry? **[6]**

c) Explain in brief the steps to start small scale industry. **[6]**

OR

Q6) a) Discuss scope of small scale industry in detail. **[3]**

b) Define: **[8]**

i) Ancillary Industry

ii) Tiny Industry

c) What is the role of small scale industry in Economic Development? Also State its the advantages. **[7]**

Q7) a) What is network analysis and how does it relate to project management? Discuss. **[8]**

b) List down the necessities for a project selection and preparation. Discuss any one in detail **[9]**

OR

Q8) a) What is project report? Discuss its significance in details. **[8]**

b) Which are the common mistake done by entrepreneur during project formulation? Discuss in details. **[9]**

⌘⌘⌘

Total No. of Questions : 8]

SEAT No. :

PB-2194

[Total No. of Pages : 2

[6263]-30

B.E. BIOTECHNOLOGY

Elective-VIB : IPR, Intellectual Property Rights

(2019 Pattern) (Semester - VIII) (415474 B)

Time : 2½ Hours] ***[Max. Marks : 70***

Instructions to the candidates:

1) ***Answer Q.1 or Q.2, Q.3 or Q.4, Q.5 or Q.6, Q.7 or Q.8.***
2) ***Neat diagrams must be drawn wherever necessary.***
3) ***Figures to the right indicate full marks.***
4) ***Use of calculator is allowed.***
5) ***Assume Suitable data if necessary.***

Q1) Answer the following: **[18]**

a) What are the risks of not registering a trademark? How can trademark protected from infringement?

b) What are the remedies for trademark infringement? What are the consequences of not renewing a trademark?

OR

Q2) Answer the following: **[18]**

a) What is the purpose and functions of trademarks?

b) What are the renewal requirements for a trademark? How can anyone enforce own trademark rights?

Q3) Answer the following: **[17]**

a) What is a trade secret? What are the steps you can take to protect your trade secrets?

b) What are the different types of false advertising? What are the legal remedies for false advertising?

OR

Q4) Answer the following: **[17]**

a) What is the right of publicity? How is the right of publicity protected?

b) What are the different ways that trade secrets can be misappropriated?

P.T.O.

Q5) Answer the following: **[18]**

a) What are the fundamental principles of copyright law? What are the copyright ownership issues?

b) Write in detail about copyright pertaining to software

OR

Q6) Answer the following: **[18]**

a) Briefly explain the term "copyright" and the rights conferred by the copyright.

b) Briefly explain the procedure relating to registration of copyright. Is registration of the work compulsory under the Copyright Act?

Q7) Answer the following: **[17]**

a) What is the GI law? How to find out if a product has a GI?

b) What are the benefits and challenges of GIs?

OR

Q8) Answer the following: **[17]**

a) How can GIs be used to promote sustainable development?

b) Write in detail about positive protection and defensive protection?

Total No. of Questions : 8]

SEAT No. :

PB4398

[Total No. of Pages : 2

[6263]-31

B.E.

BIOTECHNOLOGY

Industrial Organisation and Management

(2019 Pattern) (Semester - VIII) (Elective-VI) (415474 C)

Time : 2½ Hours] *[Max. Marks : 70*

Instructions to the candidates:

1) ***Answer Q1or Q2, Q3 or Q4, Q5, or Q6, Q7 or Q8.***
2) ***Neat diagrams must be drawn wherever necessary.***
3) ***Figures to the right indicate full marks.***
4) ***Assume Suitable data if necessary.***

Q1) a) State and explain steps for reducing materials handling cost. **[6]**

b) Define tender and its types. **[6]**

c) State the functions of material manager. **[6]**

OR

Q2) a) State requirements of successful store keeping. **[6]**

b) Explain in short various functions of storekeeper **[6]**

c) What are the advantages of materials management? **[6]**

Q3) a) What are the different methods of market research? Discuss in detail any one method. **[8]**

b) Discuss one case study showing the importance of marketing management for growth of industrial organization. **[5]**

c) What is sales forecasting? **[4]**

OR

Q4) a) What is marketing management? What are the functions of marketing? **[7]**

b) Explain any types of sales forecasting in detail. **[7]**

c) Enlist various price fixation factors. **[3]**

Q5) a) Write a short note on:

i) ISO system

ii) ISO 9001 **[10]**

b) Explain necessity and advantages of total quality management. **[7]**

OR

P.T.O.

Q6) a) Explain in detail antidumping duty. **[8]**

b) Explain in detail various factors affecting International Trade. **[9]**

Q7) a) Discuss in detail on: The concept of contract Act. **[7]**

b) Explain in detail on the payment of gratuity Act 1972. **[7]**

c) Define the term wages. **[4]**

OR

Q8) a) Discuss in detail on: Factories Act. **[7]**

b) Write a short note on: MRTP Act. **[7]**

c) Give the detail classification of Contract Act. **[4]**



Total No. of Questions : 8]

SEAT No. : ____

PB2195

[Total No. of Pages :2

[6263]-32

B.E. (Chemical)

PROCESS DYNAMICS AND CONTROL

(2019 Pattern) (Semester- VII) (409341)

Time : 2½ Hours] ***[Max. Marks : 70***

Instructions to the candidates:

1) ***Answer Q.1 or Q.2, Q.3 or Q.4, Q.5 or Q.6, Q.7 or Q.8.***
2) ***Neat diagram must be drawn wherever necessary.***
3) ***Use of logarithmic tables slide rule, electronic pocket calculator and steam tables is allowed.***
4) ***Assume Suitable data, if necessary.***

Q1) Write short notes on. **[18]**

Time integral performance criteria by

a) ISE

b) ISAE

c) ITAE

OR

Q2) Explain controller tuning using process reaction curve by Cohen Coon technique. **[18]**

Q3) a) Draw Bode plot for First order system. **[8]**

b) Draw Bode plot for Second order system. **[9]**

OR

Q4) a) What is tuning of controllers? Explain in detail. **[8]**

b) Draw Nyquist plot for first order system. **[9]**

P.T.O.

Q5) a) Explain Cascade control system with neat diagram and example. **[6]**

b) Explain Feedforward control system with neat diagram and example. **[6]**

c) Explain ratio controller with suitable example and diagram. **[5]**

OR

Q6) a) What is Gain scheduling adaptive control? Explain with suitable diagram and example. **[9]**

b) What is Programmed or scheduled adaptive control? Explain with suitable diagram and example. **[8]**

Q7) a) What is a role of digital computers in process control as process interface for data acquisition and control? Explain . **[9]**

b) Differentiate between sampling of continuous signals to discrete time signals and reconstruction of continuous time signals from discrete time signals using hold elements. **[9]**

OR

Q8) a) Explain SCADA and PLC with neat diagram. **[10]**

b) What is Plant wide control system? Explain with suitable examples. **[8]**



Total No. of Questions : 8]

SEAT No. :

PB-2196

[Total No. of Pages : 2

[6263]-33
B.E. (Chemical)
CHEMICAL REACTION ENGINEERING - II
(2019 Pattern) (Semester - VII) (409342)

Time : 2½ Hours] ***[Max. Marks : 70***

Instructions to the candidates:

1) ***Answer Q1 or Q2, Q3 or Q4, Q5 or Q6, Q7 or Q8.***
2) ***Neat diagrams must be drawn wherever necessary.***
3) ***Figures to the right side indicate full marks.***
4) ***Use of logarithmic tables slide rule, Mollier charts, electronic pocket calculator and stream tables in allowed.***
5) ***Assume suitable data, if necessary.***

Q1) a) Explain the major steps involved in the preparation of the catalyst. **[9]**

b) Explain the pore volume distribution in porous catalyst. **[9]**

OR

Q2) a) Explain the different type of adsorption isotherm observed in case of heterogeneous catalytic chemical reaction. **[9]**

b) For silica gel catalyst sample is studied with N_2 adsorption at -195.8 °C the following data were obtained. The vapor pressure of N_2 at -195.8 °C is taken as 1 atm. Estimate surface area per gram of the catalyst. Density of N_2 is 0.808 gm/cm^3. **[9]**

P in mm Hg -	25	140	230	285	320	430	505
N_2 adsorbed (O°C) & 1 atm)	127	170	197	215	230	277	335

Q3) a) Derive the expression for effectiveness factor of single cylindrical pore of the catalyst. **[9]**

b) Describe significance of the Thiele modulus for strong pore resistance and negligible pore resistance. **[9]**

OR

Q4) a) Derive an expression for diffusion of gaseous in single cylindrical pore of catalyst. **[9]**

b) Explain the selectivity for a porous catalyst in parallel and series catalytic reaction. **[9]**

P.T.O.

Q5) a) What are the different steps involved in solid catalyzed reaction? Give the suitable example. **[9]**

b) The catalytic reaction A $\rightarrow$ 4R is run at 3.2 atm and 100 C in tubular reactor which contains 0.01 kg of catalyst and uses a feed consisting of partially converted product of 20 lit/hr of pure A and following data was recorded. Determine the rate equation for this reaction. **[9]**

C_{Ain}, mol/lit	0.1	0.08	0.06	0.04
C_{Aout}, mol/hr.kg	0.084	0.070	0.055	0.038

OR

Q6) The second order reaction A->R is studied in a recycle reactor with large recycle ratio and the following data are recorded :

Void volume of reactor = 1 lit

Weight of catalyst using : 3 gm

Feed to the reactor : C_{A0} = 2 mol/lit, vo = 1 lit/hr

Exit stream concentration = C_{Aout} = 0.5 mol/lit

a) Find the rate constant for this reaction

b) How much catalyst is needed in a packed bed reactor for 80% conversion of 1000 lit/hr of feed of concentration, C_{AO} = 1 mol/lit.

c) Repeat part (b) if the reactor is packed with 1 part of catalyst to 4 part inert solid. This addition of inert helps maintain isothermal conditions and eliminate hot spots.

[18]

Q7) a) Illustrate the features of M-M kinetic equation. **[8]**

b) Explain the inhibition in the enzyme catalyzed reaction. **[8]**

OR

Q8) a) Explain the procedure for determining the M-M kinetic constants in batch or plug flow and mixed flow reactor. **[8]**

b) Explain the details of fluidized bed reactor. **[8]**

Total No. of Questions : 8]

SEAT No. : ____

PB2197

[Total No. of Pages : 3

[6263]-34

B.E. (Chemical)

CHEMICAL ENGINEERING DESIGN

(2019 Pattern) (Semester - VII) (409343)

Time : 2½ Hours] ***[Max. Marks : 70***

Instructions to the candidates:

1) ***Answer Q.1 or Q.2, Q.3 or Q.4, Q.5 or Q.6, Q.7 or Q.8.***
2) ***Figures to the right indicate full marks.***
3) ***Neat diagrams must be drawn wherever necessary.***
4) ***Assume suitable data, if necessary.***

Q1) a) Discuss General Design Considerations of Shell and Tube Heat exchanger in detail. **[9]**

b) Explain Design of double pipe heat exchanger with suitable equations. **[9]**

OR

Q2) 0.8 kg/sec of furnace oil is to be heated from 10°C to 90°C in a shell and tube heat exchanger. Heating is done by steam available at 120°C. Oil is circulated through the tubes while steam is circulated in the shell. Tubes of 16.5 mm inside diameter and 19mm Outside diameter are available. Length of tube = 3.0 m.**[18]**

The Film coefficient of heat transfer for oil is 90 W/m^2 k while the film coefficient of heat transfer for condensing steam is 7400 W/m^2 k

Density of the furnace oil = 900 kg/m^3

Specific heat of the furnace oil = 1970 J/Kg k.

Fouling resistance for the furnace oil 0.0009 m^2k/W

Fouling resistance for steam side = 0.00005 m^2k/W

Suggest a suitable design of the shell and tube heat exchanger.

Maximum oil velocity that can be used is 0.05 m/sec.

Estimate the number of passes on the tube side required in the heat exchanger.

P.T.O.

Q3) a) Compare the performance of different types of plate's contractors. **[7]**

b) A mixture of benzene and toluene containing 50 mole% benzene is to be continuously distilled in a plate column, to give distillate containing 90 mole % benzene and bottom product containing 90 mole % toluene. The feed enters the column @10,000 kg/day. The relative volatility is 2.28 and the reflux ratio is 1.5 times the minimum. If the overall plate efficiency is 0.75 calculate the actual number of plates required. Find the column height if plate spacing in 450 mm. **[10]**

OR

Q4) a) Explain plate hydraulic Design with suitable sketch. **[7]**

b) Explain Lewis-sorel method to calculate number of plates in distillation column. **[10]**

Q5) a) Explain cornell's method for prediction of height of transfer units in details.**[7]**

b) Estimate height of an overall gas-phase transfer unit of absorption tower for absorption of 5000 kg/h of gas containing 8 per cent v/v SO_2, H_{OG} using Cornell's Method. **[10]**

Given Data: $D_L = 1.7 \times 10^{-9}$ m^2/s; $D_V = 1.45 \times 10^{-5}$ m^2/s

$\mu_V = 0.018 \times 10^{-3}$Ns/m^2, $\mu_L = 1 \times 10^{-3}$Ns/m^2 $L^*_W = 16.7$ kg/s.m^2 ; K_3 (60% flooding) = 0.85.

$\psi_h = 80$, $\varphi_h = 0.1$ $N_{OG} = 8$; $\rho_v = 1.21$ kg/m^3, $M_{avg} = 29$,

$\rho_L = 1000$ kg/m^3, $D_C = 1.5$m.

As the liquid temperature has been taken as 20°C and the liquid is water. H_{OG} can be expected to be around 1 m, so as a first estimate Z can be taken as 8 m. The column diameter is greater than 0.6 m so the diameter correction term will be taken as 2.3.

OR

Q6) a) Explain Onda's method for prediction of height of transfer units in details. **[7]**

b) Estimate height of an overall gas-phase transfer unit of absorption tower, H_{OG} using Onda's Method. **[10]**

Given Data:

R = 0.08314 bar m^3/kmol K, Surface tension of liquid, taken as water at 20°C = 70×10^{-3} N/m

g = 9.81 m/s^2, dp = 38×10^{-3} m, for 38mm Intalox saddles; a = 194 m^2/m^3

σ_C For ceramics = 61×10^{-3} N/m,

L_W^* = 17.6 kg/s.m^2 ; ρ_L = 1000kg/m^3, $\mu_L = 1 \times 10^{-3}$ Ns/m^2

Q7) a) Explain the pipeline design for transportation of crude oil? **[6]**

b) Explain the design considerations for pipes under very high temperature. **[12]**

OR

Q8) a) Explain how appropriate material selection is important for piping with example. **[6]**

b) Natural gas with a specific gravity of 1.2 at 14,300kPa and 45°C is blown down to l0,000kPa.The flow rate could be from 95m^3/day to 38 m^3/ day. The drop through the pressure reducing regulator is 3100 kPa, leaving 1000 kPa for the pipe. The length of pipe is 140m upstream of the regulator and 8.9m downstream. Determine sizes of pipeline at upstream and downstream. **[12]**

Molecular weight of the gas = 20

Value of ψ = 0.6



Total No. of Questions : 8]

SEAT No. :

PB2198

[Total No. of Pages : 2

[6263]-35

B.E. (Chemical)

ENVIRONMENTAL ENGINEERING

(2019 Pattern) (Semester-VII) (Elective-III) (409344 A)

Time : 2½ Hours] *[Max. Marks : 70*

Instructions to the candidates:

1) ***Attempt Q.1 or Q.2, Q.3 or Q.4, Q.5 or Q.6, Q.7 or Q.8.***
2) ***Figures to the right indicate full markis.***
3) ***Neat diargams must be drawn wherever necessary.***
4) ***Assume suitable data, if necessary.***

Q1) a) Explain with a neat sketch solvent refining of coal **[9]**

b) Explain with a neat sketch plate type of electrostatic precipitator. **[9]**

OR

Q2) a) Explain with a neat sketch venturi Scrubber. **[9]**

b) Explain with a neat sketch construction and working of Cyclone separator. **[9]**

Q3) a) Write note on following water pollutants. **[12]**

i) Classification of Suspended solids.

ii) Grab sample and composite sample.

iii) Inorganic chemicals and minerals

iv) Oil.

b) What is Dissolved Oxygen? Explain with a neat sketch. **[5]**

OR

Q4) a) Write an Explanatory note on Chemical Oxygen Demand **[9]**

b) What is Biochemical Oxygen Demand (BOD)? Explain the BOD Estimation with necessary expression and graphs for BOD Values (remaining / utilized) versus time **[8]**

P.T.O.

Q5) Explain any two methods with a neat sketch used to settle the settle able solids in Primary Treatment. **[18]**

OR

Q6) Explain Activated Sludge Process with neat diagram **[18]**

Q7) Write and explanatory note on **[17]**

a) Recovery and recycle of solid waste

b) Composing

OR

Q8) State the need of Nitrogen removal. Explain in detail two methods of nitrogen removal **[17]**

● ● ●

Total No. of Questions : 8]

SEAT No. :

PB2199

[Total No. of Pages : 2

[6263]-36

B.E. (Chemical Engg.)

MEMBRANE TECHNOLOGY

(2019 Pattern) (Semester-VII) (Elective-III) (409344B)

Time : 2½ Hours] *[Max. Marks : 70*

Instructions to the candidates:

1) ***Attempt Q.1 or Q.2, Q.3 or Q.4, Q.5 or Q.6, Q.7 or Q.8,***
2) ***Neat diagram must be drawn whenever necessary.***
3) ***Asssume suitable data, if necessary.***

Q1) a) Derive an equation for transport through micro porous and dense membranes **[10]**

b) Explain in details about solution diffusion theory for dialysis **[7]**

OR

Q2) a) Explain in details pore flow theory for microfiltration membrane. **[10]**

b) Explain in details solution diffusion theory for pervaporisation of membrane. **[7]**

Q3) a) Explain in details effect of cross-, co- and counter-flow arrangements on flow rate of the membrane. **[9]**

b) Describe in details about boundary layer film model. **[8]**

OR

Q4) a) What is fouling of the membrane? Explain in details methods for reducing the fouling of the membrane. **[9]**

b) What is concentration polarisation? Explain in details with suitable examples. **[8]**

P.T.O.

Q5) a) Explain in details with suitable example application of nano- filtration membrane for organic solvent separation **[10]**

b) Explain in details any one application of ultrafltration membrane in food industry? **[8]**

OR

Q6) a) What is microfiltration membrane? Explain in details application for pharmaceutical industry. **[10]**

b) Explain in details application of microfiltration membrane for sterilization of wine and beer. **[8]**

Q7) a) Explain in details applications membrane for water purification. **[10]**

b) Explain in details application of membrane for carbon dioxide separation. **[8]**

OR

Q8) a) What is membrane distillation? Explain in details with suitable examples. **[10]**

b) Explain in details application of membrane for natural gas separation. **[8]**

● ● ●

Total No. of Questions : 8]

SEAT No. :

PB2200

[Total No. of Pages : 2

[6263]-37

B.E. (Chemical)

INDUSTRIAL PIPING

(2019 Pattern) (Semester-VII) (Elective-III) (409344 C)

Time : 2½ Hours] *[Max. Marks : 70*

Instructions to the candidates:

1) ***Answer Q.1 or Q.2, Q.3 or Q.4, Q.5 or Q.6, Q.7 or Q.8***
2) ***Figures to right indicate full marks.***
3) ***Neat diagram must be drawn whenever necessary.***
4) ***Asssume suitable data, if necessary.***

Q1) a) Describe the cathode protection for piping systems. **[9]**

b) Explain the piping layout consideration of **[9]**

i) Heat Exchangers

ii) Storage Tank

OR

Q2) a) Discuss piping isometrics and bill of material. **[9]**

b) Which are the factors considered when the designer is locating equipment in the plot plan? **[9]**

Q3) a) Discuss the complex pipelines in series arrangement with typical examples **[9]**

b) Write detailed design procedure for dispersed flow. **[8]**

OR

Q4) a) Discuss the various steps and design parameters for slurry pipelines. **[9]**

b) Write a note on pipeline storage capacity. **[8]**

P.T.O.

Q5) a) Discuss piping arrangements and factors considered in the piping design of the heat exchanger. **[9]**

b) Discuss piping design strategies for cryogenic materials. **[8]**

OR

Q6) a) Describe the various steps for designing utility piping. **[9]**

b) Discuss various empirical correlations for the flow of oil, gasoline, and hydrocarbon. **[8]**

Q7) a) An idealized centrifugal pump (blade outer radius of 50 mm) consumes 2 kW power while running at 3000 rpm. The entry of the liquid into the pump is axial and the exit from the pump is radial with respect to the impeller. If the losses are neglected, calculate the mass flow rate of the liquid through the pump kg/s. **[9]**

b) Derive the relation for the critical radius of insulation of a sphere having radius R. **[9]**

OR

Q8) Write a short note on **[18]**

a) Insulation for piping system

b) Purpose and selection of insulation

c) Critical thickness of insulation

● ● ●

Total No. of Questions : 8]

SEAT No. : [ ]

PB2201

[Total No. of Pages : 2

[6263]-38

B.E. (Chemical)

PETROLEUM REFINING

(2019 Pattern) (Semester-VII) (Elective-III) (409344D)

Time : 2½ Hours] ***[Max. Marks : 70***

Instructions to the candidates:

1) ***Attempt Q.1 or Q.2, Q.3 or Q.4, Q.5 or Q.6, Q.7 or Q.8***
2) ***Figures to right indicate full marks.***
3) ***Neat diagram must be drawn whenever necessary.***
4) ***Assume suitable data, if necessary.***

Q1) a) What is the reforming process? Discuss the mechanism and working of the reforming process with a neat schematic diagram. **[9]**

b) Write recent development of FCC along with a neat schematic diagram.**[9]**

OR

Q2) a) Explain the operation and working of the thermal cracking process with a typical diagram. **[9]**

b) What is the mechanism of the hydrocracking process? Describe the hydrocracking process with a neat schematic diagram. **[9]**

Q3) a) What is a solvent extraction technique? Describe solvent extraction with a schematic diagram. **[9]**

b) Describe the dewaxing process with a neat schematic. Diagram **[8]**

OR

Q4) a) Discuss various types of lube oil additives and their properties. **[10]**

b) Explain in detail about various properties of lube oil. **[7]**

P.T.O.

Q5) a) Why desulphurization is necessary for the refinery? Discuss the Hydro-desulphurization process with a typical shcematic diagram along with reaction and operating parameters. **[10]**

b) Discuss the impact of refinery processes and operations on health, safety and the environment. **[8]**

OR

Q6) a) Describe hydrogen production using the steam reforming process. **[9]**

b) What are various supporting processes used in the refinery? Discuss FCC techniques with a schematic diagram. **[9]**

Q7) a) What is the blending operation and explain the line blending operation? **[9]**

b) Explain the effect of additives on the quality of refinery products. **[8]**

OR

Q8) a) What are the recent advances in the transportation techniques used in refineries? **[9]**

b) Describe floating roofed tank arrangements for storage of crude oil. **[8]**

● ● ●

Total No. of Questions : 8] **SEAT No. :**

PB-2202

[Total No. of Pages : 2

[6263]-39
B.E. (Chemical)
Chemical Process Synthesis
(Semester - VII) (2019 Pattern) (Elective - IV) (409345 - A)

Time : 2½ Hours] ***[Max. Marks : 70***

Instructions to the candidates:

1) ***Answer Q.1 or Q.2, Q.3 or Q.4, Q.5 or Q.6 and Q.7 or Q.8.***
2) ***Neat diagrams must be drawn wherever necessary.***
4) ***Figures to the right indicate full marks.***
5) ***Use of logarithmic tables, electronic pocket calculator and steam tables is allowed.***
6) ***Assume suitable data, if necessary.***

Q1) Write notes on: **[16]**

a) Centrifugation

c) Liquid-Liquid extraction

OR

Q2) a) Explain the effect of various parameters on the performance of absorption. **[8]**

b) Explain in detail separation of heterogeneous mixtures. **[8]**

Q3) a) Explain choice and separation criteria for distillation as a separator. **[9]**

b) Discuss thermal coupling of the pre-fractionator arrangement. **[9]**

OR

P.T.O.

Q4) a) Discuss optimization of reducible structure. **[9]**

b) Discuss thermal coupling for direct and indirect distillation sequencing. **[9]**

Q5) a) Write note on Utility selection. **[9]**

b) Explain the concept of Threshold problems in Heat Exchanger Network. **[9]**

OR

Q6) a) Discuss integration of refrigeration cycles. **[9]**

b) Explain the concept of Energy Targets in Heat Exchanger Network. **[9]**

Q7) a) Explain the intensification of hazardous materials. **[9]**

b) Write in brief on toxic release from chemical process industry. **[9]**

OR

Q8) a) Explain Attenuation of hazardous material. **[9]**

b) Explain the role of safety engineer in Chemical Industry. **[9]**

Total No. of Questions : 8]

SEAT No. :

PB-2203

[Total No. of Pages : 2

[6263]-40
B.E.
CHEMICAL
Industrial Management and Entrepreneurship
(Semester - VII) (2019 Pattern) (Elective - IV) (409345 - B)

Time : 2½ Hours] *[Max. Marks : 70*

Instructions to the candidates:

1) ***Answer Q.No. 1 or2, 3 or 4, 5 or 6,7 or 8.***
2) ***Figures to right indicate full marks.***
3) ***Neat diagram must be drawn whenever necessary.***
4) ***Assume suitable data, if necessary.***

Q1) a) Write a brief explanation of the growth of successfull entrepreneurial businesses. **[9]**

b) Explain the role of the National Institute of Entrepreneurship and Small Business Development (NIESBUD) **[9]**

OR

Q2) a) Discuss Peter Drucker's theory about entrepreneurial pitfalls. **[9]**

b) Why do entrepreneurs fail? Discuss along with the typical examples. **[9]**

Q3) a) Write an explanatory note of team the role theory by Henry Mintzberg **[9]**

b) Explain the use of visual and presentation aids. **[8]**

OR

P.T.O.

Q4) a) Explain various theories of team development. **[9]**

b) Discuss various management theories and managerial work with typical examples. **[8]**

Q5) a) Discuss the concept of adding resources to the model for project development. **[9]**

b) Describe various uncertain activity times and tracking techniques. **[8]**

OR

Q6) a) Describe the Six Sigma concept and enlist its requirements and advantages. **[9]**

b) Elaborate on handling multiple projects with typical examples. **[8]**

Q7) a) Write a note on marketing research, product & brand management. **[9]**

b) What are the different techniques of data collection and data analysis. **[9]**

OR

Q8) a) Describe promotion and pricing techniques with typical examples. **[9]**

b) Describe the role of marketing in society and the firm. **[9]**

Total No. of Questions : 8]

SEAT No. :

PB-2204

[Total No. of Pages : 2

[6263]-41

B.E. (Chemical)

GREEN TECHNOLOGY

(2019 Pattern) (Semester - VII) (409345C) (Elective - IV)

Time : 2½ Hours] *[Max. Marks : 70*

Instructions to the candidates :

1) ***Answer Q.1 or Q.2, Q.3 or Q.4, Q.5 or Q.6, Q.7 or Q.8.***
2) ***Neat diagrams must be drawn wherever necessary.***
3) ***Figures to the right indicate full marks.***
4) ***Use of logarithmic tables, electronic pocket calculator and steam tables is allowed.***
5) ***Assume suitable data, if necessary.***

Q1) a) Explain Integrated Pollution Prevention and its Control in detail. **[8]**

b) The Importance of Measurement in Production of Safer Gasoline. **[8]**

OR

Q2) Write notes on : **[16]**

a) Green Process Metrics

b) Eco-management

Q3) Explain with example and applications of Supercritical Fluids, Supercritical Carbon Dioxide, Supercritical Water. **[18]**

OR

Q4) a) Discuss the Ionic Liquids as Catalysts in Chemical industry with example. **[9]**

b) Explain Chemicals from renewable feed stocks in detail. **[9]**

P.T.O.

Q5) a) Explain the Photochemical Reactions with example. **[9]**

b) Explain Advantages and Challenges Faced by Photochemical Processes. **[9]**

OR

Q6) a) Explain the concept of Designing greener processes for Conventional Reactors. **[9]**

b) Explain the Chemistry Using Microwaves with example in detail. **[9]**

Q7) a) Explain the Eco-friendly Pesticides, Insecticides. **[9]**

b) Write in brief Radical Process with example. **[9]**

OR

Q8) a) Explain overall Greening of Acetic Acid Manufacture in detail. **[9]**

b) Explain in detail Dyeing industry to be Green. **[9]**

▽▽▽▽

Total No. of Questions : 8]

SEAT No. :

PB-2205

[Total No. of Pages : 2

[6263]-42

B.E. (Chemical)

ADVANCED SEPARATION PROCESSES - I

(2019 Pattern) (Semester - VII) (409345D) (Elective - IV)

Time : 2½ Hours] ***[Max. Marks : 70***

Instructions to the candidates :

1) ***Answer Q.1 or Q.2, Q.3 or Q.4, Q.5 or Q.6, Q.7 or Q.8.***
2) ***Neat diagrams must be drawn wherever necessary.***
3) ***Figures to the right side indicate full marks.***
4) ***Assume suitable data, if necessary.***

Q1) a) Explain characteristics of complexing agents used in chemical complexation. **[9]**

b) Explain reactive extraction process in detail. **[9]**

OR

Q2) a) Explain Reactive distillation in detail. **[9]**

b) Explain Reactive crystallization in detail. **[9]**

Q3) a) Explain the principle, working and application of reverse osmosis techniques. **[9]**

b) Explain dialysis and electrodialysis with neat sketches and its applications. **[8]**

OR

Q4) a) Explain fouling of membrane and concentration polarization. Discuss the methods of controlling the fouling. **[9]**

b) What is cross flow filtration? What are its advantages over dead end filtration? **[8]**

P.T.O.

Q5) a) Explain the detail working of Chromatography. **[9]**

b) Write short note on Temperature swing adsorption and Pressure swing adsorption. **[9]**

OR

Q6) a) Explain the concept and general principles of adsorption. **[9]**

b) Write down the applications of chromatography in separation of enzymes proteins and industrial examples in detail. **[9]**

Q7) a) Write down applications of froath flotation techniques. **[9]**

b) What is principle and working of ultra centrifugation and discuss its application. **[8]**

OR

Q8) a) Explain Zone electrophoresis in detail. **[9]**

b) Explain zone refining in detail. **[8]**

▽▽▽▽

Total No. of Questions : 8]

SEAT No. : ____

PB2206

[Total No. of Pages : 2

[6263]-43

B.E. (Chemical)

PROCESS MODELING & SIMULATION

(2019 Pattern) (Semester-VIII) (409349)

Time : 2½ Hours] ***[Max. Marks : 70***

Instructions to the candidates:

1) ***Answer Q1 or Q2, Q3 or Q4, Q5 or Q6, Q7 or Q8.***
2) ***Neat diagrams must be drawn wherever necessary.***
3) ***Figures to the right indicate full marks.***
4) ***Assume suitable data if necessary.***

Q1) Develop model for Shell & Tube Heat Exchanger. **[18]**

OR

Q2) Develop model for triple effect evaporator. **[18]**

Q3) Derive Mathematical model for multi solute batch extraction. Use notations as usual. Draw figure. **[17]**

OR

Q4) Develop model for single component vaporizer considering liquid and vapor phase dynamic models. Write down assumptions. **[17]**

Q5) Derive modeling equations for three CSTRs. in series with variable hold up. **[18]**

OR

Q6) Develop model for batch reactor with heating and cooling phases. **[18]**

P.T.O.

Q7) Calculate heat added for kmol of ethylene using following equation from 303 k to 523 k

$$C_p^o = 2.83 + 28.6 \times 10^{-3} T - 87.26 \times 10^{-7} T^2$$

Where Cp is in kcal/.kmol k.

Solve by analytically and verify your answer with Simson's 1/3rd rule. **[17]**

OR

Q8) A second order reaction $A \rightarrow B$ takes place in a batch reactor where reaction rate constant k=0.2 (mol/sec/cm^3). Initial concentration C_{AO}=2mol/cm^3. Find the outlet concentration at t=5 sec using Euler's method and check your answer by analytical method. **[17]**

● ● ●

Total No. of Questions : 8]

SEAT No. :

PB2207

[Total No. of Pages : 3

[6263]-44
B.E. (Chemical)
PROCESS ENGINEERING COSTING & PLANT DESIGN
(2019 Pattern) (Semester - VIII) (409350)

Time : 2½ Hours] *[Max. Marks : 70*

Instructions to the candidates:

1) ***Answer Q.1 or Q.2, Q.3 or Q.4, Q.5 or Q.6, Q.7 or Q.8.***
2) ***Neat diagrams must be drawn wherever necessary.***
3) ***Figures to the right indicate full marks.***
4) ***Use of electronic pocket calculator is allowed.***
5) ***Assume suitable data, if necessary.***

Q1) a) Describe in brief cash flow for industrial operations. **[5]**

b) Explain about cost index to determine cost of a process equipment. **[4]**

c) Define CE plant cost index. The battery limit (B/L) plant cost in the year 1999 for a product X having capacity 20,000 TPA was 16 million US$. How much it would cost in August 2003? **[5]**

Data: CE plant cost index August 2003 = 402.4

: CE plant cost index 1999 = 390.6

d) Explain Rate of Return (ROR) or Return on Investment (ROI). **[4]**

OR

Q2) a) Explain in brief estimation of total annual product cost. **[8]**

b) A company has three alternative investment, which are being considered. If a company Incharge expects 15% rate of return on original investment, which one will be sutiable? Because all three investments are for the same type of unit and yields same service only one of the investment can be related. **[10]**

Item	Investment I	Investment II	Investment III
(i) Initial fixed capital (Rs.)	1,00,000	1,70,000	2,10,000
(ii) Working captial investment (Rs.)	10,000	10,000	15,000
(iii) Annual cash flow (Rs.)	30,000	52,000	59,000
(iv) Annual expenditure (Rs.)	15,000	28,000	21,000

P.T.O.

Q3) a) Explain why are Engineers interested in optimization? **[3]**

b) Explain in brief Lagrange Multiplier Method. **[8]**

c) A plant produces refrigerators at the rate of P units per day. The variable costs per refrigerator have been found to be $\$47.73+0.1P^{1.2}$. The total daily fixed charges are \$1750, and all other expenses are constant at \$7325 per day. If the selling price per refrigerator is \$173, determine. **[6]**

i) The daily profit at a production schedule giving the minimum cost per refrigerator.

ii) The daily profit at a production schedule giving the maximum daily profit.

OR

Q4) a) Explain in brief Break-Even chart with a neat diagram. **[8]**

b) Explain in brief optimum production rates in plant operation with an equation to determine the total product cost CT per unit of production. **[9]**

Q5) a) Explain in brief the procedure for optimising the process design of a baffled shell & Tube single pass counter flow H.E. but there is no change of phase of fluids in the shell or tubes. **[10]**

b) Describe in brief preparation of a techno-economic feasibility report to establish a plant of refining of edible oil. **[8]**

OR

Q6) a) Explain in brief optimum design & costing of a Reactor Vessel. **[8]**

b) Explain in brief determination of optimum operating time for maximum amount of heat transfer in Evaporator with scale formation. **[8]**

c) Define optimum diameter of a pipeline. **[2]**

Q7) a) Explain in brief factors to be considered in preparation of the plot plan as a proper plant layout. **[8]**

b) Describe in brief organization of a Design Report. **[9]**

OR

Q8) a) Differentiate between critical path method and program evaluation & review technique. **[8]**

b) Draw a network diagram for the construction of a bungalow with following activities: **[9]**

Activity	Event	Sub Event
A	1	2
B	1	3
C	3	4
D	2,4	5
E	4	6
F	5	7
G	7	8
H	6	9
I	5	10
J	8	11
K	10,11	12
L	9,12	13
M	13	14
N	14	15

Total No. of Questions : 8]

SEAT No. :

PB2208

[Total No. of Pages : 2

[6263]-45

B.E. (Chemical)

ENERGY AUDIT AND CONSERVATION

(2019 Pattern) (Semester - VIII) (Elective - V) (409351 A)

Time : 2½ Hours] *[Max. Marks : 70*

Instructions to the candidates:

1) ***Answer Q1 or Q2, Q3 or Q4, Q5 or Q6, Q7 or Q8.***
2) ***Neat diagrams must be drawn wherever necessary.***
3) ***Figures to the right side indicate full marks.***
4) ***Assume suitable data if necessary.***

Q1) With the help of case study, explain the implementation of energy cost optimization projects in electrical utilities as well as thermal utilities. **[17]**

OR

Q2) List and explain in detail the Instruments for Audit and Monitoring Energy and Energy Savings. **[17]**

Q3) Write a note on motivation of implementing energy conservation measures. Also provide the evaluating costs and benefits of conservation measures. **[18]**

OR

Q4) Explain in detail the methodology for forecasting industrial energy supply and demand for energy available for industrial use. **[18]**

Q5) a) What are the different measures taken for promoting energy conservation? **[8]**

b) What do you understand by Plant level organization? Explain with respect to the energy conservation programs. **[9]**

OR

P.T.O.

Q6) With respect to the Energy Conservation Programs, explain about the allocation of resources, and scheduling, measuring, monitoring and reporting. **[17]**

Q7) Provide in details the guidelines for improving mixing vessels and heat exchangers for energy conservation. **[18]**

OR

Q8) Provide in details the guidelines for improving chilled water plants and central air conditioning system for energy conservation. **[18]**



Total No. of Questions : 8]

SEAT No. :

PB2209

[Total No. of Pages : 2

[6263]-46

B.E. (Chemical)

CHEMICAL PROCESS SAFETY

(2019 Pattern) (Semester - VIII) (Elective - V) (409351 B)

Time : 2½ Hours] *[Max. Marks : 70*

Instructions to the candidates:

1) *Answer Q1 or Q2, Q3 or Q4, Q5 or Q6, Q7 or Q8.*
2) *Figures to the right indicate full marks.*
3) *Neat diagrams must be drawn wherever necessary.*
4) *Assume suitable data if necessary.*

Q1) a) Fires and explosions are substantial hazards in many chemical plants, Describe with examples the three ingredients of any fire. **[9]**

b) Create a checklist with at least six items to identify fire hazards in any workplace. **[9]**

OR

Q2) a) Describe Boiling-Liquid Expanding-Vapor Explosion. **[9]**

b) Describe Mechanical Explosions with estimation of energy of explosion. **[9]**

Q3) a) Elaborate runaway reactions? Explain with examples. **[9]**

b) Describe various methods of storage and handling of flammable and toxic chemical. **[8]**

OR

Q4) a) Explain working of ventilation and sprinkler systems for preventing fires and explosions. **[9]**

b) What bonding and grounding procedures must be followed to transfer a drum of flammable solvent into a storage tank? **[8]**

P.T.O.

Q5) a) Explain event tress and fault tress in the context of process safety. **[9]**

b) Describe in short about the review of probability theory for risk assessment. **[9]**

OR

Q6) a) Describe types of safety reviews and concept of risk assessment. **[9]**

b) Discuss in detail hazard and operability studies (HAZOP). **[9]**

Q7) a) Explain the various safety devices for relieving pressure. **[9]**

b) Discuss in detail hazard models and risk data. **[8]**

OR

Q8) a) What are the basic preventive and protection measures to Hazards. **[9]**

b) Explain emergency shutdown systems. **[8]**

Total No. of Questions : 8]

SEAT No. :

PB2210

[Total No. of Pages : 2

[6263]-47

B.E. (Chemical Engineering)

COMPUTATIONAL FLUID DYNAMICS

(2019 Pattern) (Semester - VIII) (Elective - V) (409351 C)

Time : 2½ Hours] *[Max. Marks : 70*

Instructions to the candidates:

1) *Answer Q1 or Q2, Q3 or Q4, Q5 or Q6, Q7 or Q8.*
2) *Neat diagrams must be drawn wherever necessary.*
3) *Figures to the right indicate full marks.*
4) *Use of calculator is allowed.*
5) *Assume suitable data if necessary.*

Q1) a) What is the Discretization of governing equations? Discretize the following equation using Finite Volume Method (FVM). **[9]**

$$\partial^2 u / \partial x^2 = 0$$

b) Give the mathematical classification of governing equations. Discuss briefly methods for solving these equations by FVM. **[9]**

OR

Q2) a) Discretise 1-D unsteady state equation of continuity for the fluid flow using FVM. **[9]**

b) Write short notes on : **[9]**

i) Upwind schemes

ii) SIMPLEX method

Q3) a) List down turbulent models and explain one equation models. **[9]**

b) What are Reynold's stresses? Derive equation for the Reynold's stresses for Turbulence flow. **[8]**

OR

Q4) a) Explain in detail k-ω model for modeling turbulence. **[8]**

b) Derive Reynold's averaged Navier-Stoke's equation. **[9]**

P.T.O.

Q5) a) Draw a sketch and explain different flow patterns observed in multiphase flows? Describe in detail the separated flow modeling with assumptions and relevant equations. **[9]**

b) What is Multiphase flow modeling. Explain VOF model in detail. **[9]**

OR

Q6) a) Give governing equations for Multiphase flows based on homogeneous and heterogeneous flow considerations. Explain each term involved. **[9]**

b) Differentiate with reasoning between discrete phase modeling, continuous phase modeling. **[9]**

Q7) a) Differentiate between advantages and limitations of CFD Analysis. **[8]**

b) What is post processing in CFD Simulation? Explain various results of post processing. **[9]**

OR

Q8) a) Explain Fluid Flow Phenomena. How CFD is used to analyse fluid flow Phenomena? **[8]**

b) Write short notes on : **[9]**

i) Mesh generation

ii) CFD solvers



Total No. of Questions : 8]

SEAT No. :

PB2211

[Total No. of Pages : 2

[6263]-48

B.E. (Chemical Engineering)

ADVANCED MATERIALS

(2019 Pattern) (Semester - VIII) (Elective - V) (409351 D)

Time : 2½ Hours] *[Max. Marks : 70*

Instructions to the candidates:

1) *Answer Q1 or Q2, Q3 or Q4, Q5 or Q6, Q7 or Q8.*
2) *Neat diagrams must be drawn wherever necessary.*
3) *Assume suitable data if necessary.*

Q1) a) Explain in details advanced processing methods for ceramic materials. **[10]**

b) How do we enhance the properties of ceramic material? Discuss in details about microstructural design. **[7]**

OR

Q2) a) Discuss in details about advanced powder synthesis techniques of ceramic materials. **[10]**

b) List advantages and disadvantages of ceramic materials and polymeric materials. **[7]**

Q3) a) What are composite materials? Explain in details with its properties. **[9]**

b) Discuss in details Reinforcing and matrix materials used for polymer composite. **[8]**

OR

Q4) a) Explain in details about Polymer composites with suitable examples. **[9]**

b) Short notes on polymer composite. **[8]**

i) Mechanical behaviour

ii) Fibre winding techniques

P.T.O.

Q5) a) Explain in details about significance of metals composite with suitable examples. **[10]**

b) Give short notes on metal composites. **[8]**

i) Chemical compatibility

ii) Types of reinforcement

OR

Q6) a) Describe in details about significance of reinforce ceramic with suitable examples. **[10]**

b) Explain in details about mechanical behaviours and properties of ceramic composites. **[8]**

Q7) a) Explain in details about ablative polymers, & their applications. **[8]**

b) What is importance of nanomaterials? Explain in details with suitable examples. **[10]**

OR

Q8) What is nonmaterial? Explain in details about synthesis, characterization and application of nanomaterial. **[18]**

Total No. of Questions : 8]

SEAT No. :

PB-2212

[Total No. of Pages : 2

[6263]-49
B.E.(Chemical)
CATALYSIS
(Elective - VI) (2019 Pattern) (Semester - VIII) (409352A)

Time : 2½ Hours] ***[Max. Marks : 70***

Instructions to the candidates:

1) ***Solve Q1 or Q2, Q3 or Q4, Q5 or Q6, Q7 or Q8.***
2) ***Neat diagrams must be drawn wherever necessary.***
3) ***Figures to the right side indicate full marks.***
4) ***Use of logarithmic tables, slide rule, Mollier charts, electronic pocket calculator and steam table is allowed.***
5) ***Assume suitable data, if necessary.***

Q1) Write short notes on the following **[16]**

a) Adsorption theories and concept of active site

b) Diffusion effect in catalysis

OR

Q2) Explain the mechanism of adsorption and its isotherms in detail. **[16]**

Q3) a) Explain the pore volume distribution in the catalyst. **[9]**

b) Derive the BET equation for determination of catalyst surface area. **[9]**

OR

Q4) a) Explain mechanism of catalyst poisoning. **[9]**

b) Explain mass transfer in the catalysis. **[9]**

Q5) Write short notes on the following **[18]**

a) Structural chemistry of zeolites

b) Size and shape selectivity of zeolites

OR

P.T.O

Q6) a) Explain the molecular sieves with industrial application. **[9]**

b) Explain the catalyst cracking in detail. **[9]**

Q7) a) Give the kinetics of noncompetitive inhibition of enzyme reaction. **[9]**

b) Explain inhibition in biocatalyst. **[9]**

OR

Q8) a) Give the features of MM kinetic equation. **[9]**

b) Explain mechanism of participation of enzymes in few reaction. **[9]**



Total No. of Questions : 8]

SEAT No. :

PB-2213

[Total No. of Pages : 2

[6263]-50

B.E. (Chemical)

NANOTECHNOLOGY

(2019 Pattern) (Semester - VIII) (409352B) (Elective-VI)

Time : 2½ Hours] *[Max. Marks : 70*

Instructions to the candidates:

1) ***Answer Q.1 or Q.2, Q.3 or Q.4, Q.5 or Q.6, Q.7 or Q.8.***
2) ***Neat diagrams must be drawn wherever necessary.***
3) ***Figures to the right side indicates full marks.***
4) ***Use of Calculator is allowed.***
5) ***Assume Suitable data if necessary***

Q1) a) Explain principle and operation of Transmission electron microscope. **[8]**

b) Explain principle and operation of X-Ray Diffraction with neat sketch. **[8]**

OR

Q2) a) Explain in detail various interactions of electron with specimen in Electron microscopes. **[8]**

b) Explain principle and operation of Scanning electron microscope with neat sketch. **[8]**

Q3) a) Explain de Broglie's hypothesis with necessary expressions. **[8]**

b) Explain use of quantum cryptography in secure data communication. **[10]**

OR

Q4) a) Define Semiconductors and write note on extrinsic and intrinsic semiconductors. **[10]**

b) Explain the principle of Pauli exclusion and its application. **[8]**

P.T.O.

Q5) a) Explain the different chemical properties useful for nanocolloids. **[10]**

b) Discuss the various nanostructures used in photocatalysis along with their properties. **[8]**

OR

Q6) a) Explain the application of nanomaterials in nanocolloids. **[10]**

b) Explain in detail important electrical properties of nanomaterials. **[8]**

Q7) a) Explain application of nanotechnology in drug delivery system. **[10]**

b) Write short notes on Polymer nanocomposites and fillers **[8]**

OR

Q8) a) Explain health and environmental Impacts of nanotechnology? **[10]**

b) What is the application of nanomaterials for photocatalytic reactor? **[8]**

⌘⌘⌘

Total No. of Questions : 8]

SEAT No. :

PB-2214

[Total No. of Pages : 2

[6263]-51

B.E. (Chemical)

FUEL CELL TECHNOLOGY

(2019 Pattern) (Semester - VIII) (409352C) (Elective-VI)

Time : 2½ Hours] ***[Max. Marks : 70***

Instructions to the candidates:

1) ***Answer Q.1 or Q.2, Q.3 or Q.4, Q.5 or Q.6, Q.7 or Q.8.***
2) ***Figures to the right indicates full marks.***
3) ***Neat diagrams must be drawn wherever necessary.***
4) ***Assume Suitable data, if necessary***

Q1) a) What is reforming? How is ATR i.e Auto Thermal Reforming used to manufacture hydrogen needed for a fuel cell? Describe its advantages and disadvantages. **[10]**

b) Describe the working principle of the H_2 fuel cell with a typical schematic diagram. **[8]**

OR

Q2) a) Describe H_2 production from renewable sources and its storage techniques. **[9]**

b) Discuss various hydrocarbon-based fuel cells with typical examples. **[9]**

Q3) a) Describe various anodic catalyst materials used in the construction of a Proton Exchange Membrane Fuel Cell and their possible functions in its working. **[9]**

b) Write a detailed note on steam reforming needed in a hydrogen fuel cell. **[8]**

OR

Q4) a) Describe procedure of modeling electrochemical potential **[9]**

b) Describe in detail the construction and working of a photo-electrochemical reactor design scheme **[8]**

P.T.O.

Q5) a) Describe the treatment of electrolyte interface for SOFC with a typical schematic diagram **[9]**

b) Describe the concept of an Ohmic over potential for SOFC **[8]**

OR

Q6) a) Describe with the help of a diagram oxidation reaction on the TPB of an anode made of Ni-YSZ **[9]**

b) Describe the modeling current transport & potential field in SOFC **[8]**

Q7) a) At equilibrium how electric potentials are related to chemical potentials of fuel and oxidizer stream in a fuel cell? Describe their importance in the design of a fuel cell **[9]**

b) Describe enzymatic fuel cells with their advantages and limitations **[9]**

OR

Q8) Write a note on **[3 × 6 = 18]**

i) Steam Reforming

ii) Fuel cell Networking

iii) Fuel cell System

⌘⌘⌘

Total No. of Questions : 8]

SEAT No. :

PB-2215

[Total No. of Pages : 2

[6263]-52

B.E. (Chemical)

PETROCHEMICAL ENGINEERING

(2019 Pattern) (Semester - VIII) (409352D) (Elective-VI)

Time : 2½ Hours] *[Max. Marks : 70*

Instructions to the candidates:

1) ***Answer Q.1 or Q.2, Q.3 or Q.4, Q.5 or Q.6, Q.7 or Q.8.***
2) ***Figures to the right indicates full marks.***
3) ***Neat diagrams must be drawn wherever necessary.***
4) ***Assume Suitable data if necessary***

Q1) List down different furnaces used in petrochemical industry. Explain any 3 in detail. **[18]**

OR

Q2) List down different separation and purification techniques utilized in petrochemical industry. Explain any 3 in detail. **[18]**

Q3) With a neat and labeled diagram, explain the production of Amines. **[17]**

OR

Q4) With a neat and labeled diagram, explain the production of Glycols. **[17]**

Q5) With a neat and labeled diagram, explain in detail the production of Nylon 6,6. **[18]**

OR

Q6) With a neat and labeled diagram, explain in detail the production of polyester. **[18]**

P.T.O.

Q7) Explain in detail the various pollution control - norms and methods of elimination applied in Petrochemical Industry. **[17]**

OR

Q8) a) Briefly describe on the safety considerations applied in Petrochemical Industry. **[9]**

b) What is meant by IGCC? Explain in brief. **[8]**

⌘⌘⌘

Total No. of Questions : 8]

SEAT No. :

PB2216

[Total No. of Pages : 2

[6263]-53
B.E. (Civil Engg.)
FOUNDATION ENGINEERING
(2019 Pattern) (Semester - VII) (401001)

Time : 2½ Hours] *[Max. Marks : 70*

Instructions to the candidates:

1) ***Answer Q.1 or Q.2, Q.3 or Q.4, Q.5 or Q.6, Q.7 or Q.8.***
2) ***Figures to the right indicate full marks.***
3) ***Assume suitable data, if necessary.***
4) ***Use of calculator is allowed in the examination.***
5) ***Neat diagrams must be drawn wherever necessary.***

Q1) a) Enlist the assumptions of Terzaghi's consolidation theory. **[5]**

b) Discuss the different causes of differential settlement. Mention the meausres to avoid it. **[6]**

c) In a consolidation test the void ratio decreases from 0.7 to 0.65 when the load was changed from 50 kN/m^2 to 100kN/m^2. Calculate compression index coefficient of volume change. **[6]**

OR

Q2) a) Explain in detail significant depth of foundation. **[5]**

b) Define **[6]**

i) Over consolidation ratio

ii) Normally consolidated soil

iii) Over consolidated soil

c) A consolidation test on a sample of clay having thickness of 2.3cm indicates half of consolidation in first 5 minutes, under similar condition how long the strata of 6m thick will take time for half consolidation with single drainage. **[6]**

Q3) a) Write a note on classification of pile according to function. **[5]**

b) Explain the concept of field rule to calculate the efficiency of pile group with example. **[6]**

c) A wooden pile is being driven with a drop hammer weighing 20 kN and having a free fall of 1.0 m. The penetration in last below is 5 mm. Determine the load carrying capacity of pile according to the Engineering News Formula. **[7]**

OR

P.T.O.

Q4) a) Discuss the negative skin friction with neat sketch How it is calculated for single pile? **[5]**

b) Write a note on uplift capacity of pile. **[6]**

c) In a 16 piles group, the pile diameter is 45 cm and c/c spacing of the square group is 1.5 m. if cohesion is 50 kN/m^2. Determine whether failure would occur with the pile acting individually or as a group? Neglect the bearing at the tip of the pile. All piles are 10 m long. Take m is 0.7 for shear mobilization around each pile. **[7]**

Q5) a) Write down the steps involved in proportioning of footing. **[5]**

b) When following footing types are recommended **[6]**

i) trapezoidal footing

ii) strap footing

c) Enlist the components of well foundation with neat sketch. **[6]**

OR

Q6) a) Explain the concept of floating raft. **[5]**

b) Write a note on determination of **[6]**

i) Scour depth

ii) Bearing capacity of well foundation

c) What is tilts and shifts of well foundation? How they are rectified? **[6]**

Q7) a) Discuss any three types of cofferdams with neat sketch. **[6]**

b) Explain how to evaluate swelling potential of black cotton soil. **[6]**

c) Write a note on interlocking circular piles. **[6]**

OR

Q8) a) Explain the different engineering problems associated with black cotton soil. **[6]**

b) Enlist the different applications of cofferdam. **[6]**

c) Discuss the preloading techniques with neat sketch. **[6]**

Total No. of Questions : 8]

SEAT No. :

PB-2217

[Total No. of Pages : 3

[6263]-54

B.E. (Civil Engineering)

TRANSPORTATION ENGINEERING

(2019 Pattern) (Semester - VII) (401002)

Time : 2½ Hours] *[Max. Marks : 70*

Instructions to the candidates:

1) ***Answer Q.1 or Q.2, Q.3 or Q.4, Q.5 or Q.6, Q.7 or Q.8.***
2) ***Figures to the right indicates full marks.***
3) ***Use of electronic pocket calculator is allowed.***
4) ***Assume suitable data if necessary.***
5) ***Neat diagrams must be drawn wherever necessary.***

Q1) a) Explain any two important pavement surface characteristics with respect to highway geometric design. **[6]**

b) Distinguish clearly between Camber and Super elevation. How super elevation is provided in the field. **[6]**

c) Calculate the absolute minimum and ruling minimum radius of horizontal curve for a design speed of 80 kmph. **[6]**

OR

Q2) a) State and explain the factors governing the stopping sight distance. **[6]**

b) Calculate safe stopping sight distance for a design speed of 100 kmph. Assume any other data suitability. **[6]**

c) What are the various vehicular characteristics which affects the road design? Briefly explain. **[6]**

Q3) a) What are the desirable properties of the sub grade soil? **[6]**

b) Explain the CBR and the test procedure for laboratory and field tests. How are the results of the test obtained and interpreted? **[6]**

c) Explain how Impact Test on aggregates is done in the laboratory. How are the results of the test interpreted? **[6]**

OR

P.T.O.

Q4) a) What is Foamed Bitumen? How foamed bitumen is prepared and where it is used. **[6]**

b) Explain the Flash and Fire Point Test. **[6]**

c) Discuss the desirable properties of bitumen. Compare tar and bitumen. **[6]**

Q5) a) Draw a neat cross section of flexible pavement. Explain in brief functions of various layers of flexible pavement. **[5]**

b) Explain different stresses in flexible pavements. **[6]**

c) Compute the radius of relative stiffness of 15cm thick cement concrete slab from the following data : **[6]**

Modulus of elasticity of cement concrete = 210000 kg/cm^2

Poisson's ratio for concrete = 0.13

Modulus of subgrade reaction,

K = i) 3.0 kg/cm^3 ii) 7.5 kg/cm^3

OR

Q6) a) Explain with sketch equivalent single wheel load ESWL. **[5]**

b) Calculate the stresses at interior and corner regions of cement concrete pavement using Westergaard's stress equations. Use the following data: **[6]**

Modulus of elasticity of cement concrete = 300000 kg/cm^2

Wheel load = 5100 kg

Pavement thickness = 18 cm

Poisson's ratio for concrete = 0.15

Modulus of subgrade reaction = 6.0 kg/cm^3

Radius of contact area 15 cm

c) Explain the importance of dowel and tie bars in rigid pavements. **[6]**

Q7) a) Define Pier. Draw a neat sketch of the Hammer head shape pier and Multiple bent Pier. **[6]**

b) A bridge is proposed to be constructed across an alluvium stream carrying a discharge of 300 m^3/s. Assume silt factor, f = 1.10, determine the maximum scour depth when the bridge consists of 5 spans of 20 m each. **[6]**

c) Define Rail Guage and explain its types. **[5]**

OR

Q8) a) Define Abutment. State the various types of abutments. Also State the requirements of good Abutments. **[6]**

b) A bridge has a linear waterway of 110m constructed across a stream, whose natural waterway is 190 m. If the flood flow is 950 Cumecs and the mean depth of flow is 2.75m, Calculate the Afflux under the bridge. **[6]**

c) Explain the function of ballast. **[5]**

⌘⌘⌘

Total No. of Questions : 8]

SEAT No. :

PB2218

[Total No. of Pages : 2

[6263]-55
B.E. (Civil Engineering)
COASTAL ENGINEERING
(2019 Pattern) (Semester - VII) (Elective - III) (401003 A)

Time : 2½ Hours] *[Max. Marks : 70*

Instructions to the candidates:

1) ***Attempt Q.1 or Q.2, Q.3 or Q.4, Q.5 or Q.6, Q.7 or Q.8.***
2) ***Figures to the right indicates full marks.***
3) ***Assume suitable data if necessary.***
4) ***Neat diagrams must be drawn wherever necessary.***

Q1) a) Define tide. What are the basic characteristics of tides? Explain the process of generation of tides? What affects tides in addition to Sun and Moon? **[9]**

b) Classify the tides in detailbased on the position of Earth, Sun, and the Moon and based on the frequency of occurrence. Draw the neat diagrams wherever necessary. **[9]**

OR

Q2) a) Define tidal currents in shallowsea? What are the spring and neap currents? What are the forces which affects the tidal currents in hallow sea? What are the storm surges? **[9]**

b) Elaborate in detail dynamic theory of tides-types. **[9]**

Q3) a) Enlist the various factors which affect on the long shore sediment transport (littoral drift)? What are the characteristics of littoral drift materials? How particle fall velocity influences the littoral drift process? **[8]**

b) Compare the enlisted factors determining Littoral Wave Climate and explain their interdependency at the time of long shore sediment transport. **[9]**

i) Offshore Wave Climate

ii) Effect of Bottom Topography

iii) Nearshore Wave Climate

OR

P.T.O.

Q4) a) Differentiate between the offshore and nearshore sediment transport. What is sediment budget? Give expression to determine the sediment budget for longshore sediment transport. Explain the effect of different wave conditions on sediment transport. **[8]**

b) Draw a schematic profile representing the effect of littoral drift on shoreline and explain various effects of littoral drifts on the shoreline. What remedial measures should be provided to reduce the loss which occurs due to the littoral drift. **[9]**

Q5) a) Characterize the various types of coastal structures based on coastal protection, shore protection, mixed coastal and shore protection, draw schematic or line diagrams representing the any 4 structures and write 2 applications of each. **[9]**

b) What is the concept breakwater? How it useful for shore protection? Explain following types of breakwaters in depth. **[9]**

i) Reef breakwaters

ii) Detached breakwaters

iii) Floating breakwaters

OR

Q6) a) Draw the repersentative diagrams of sea walls, sea dikes, revetments, bulkheads and explain each of them in depth along with their functions.**[9]**

b) Draw the figures and explain Artificial Beach Nourishment and beach dewatering (or beach drain) as shore protection measures. **[9]**

Q7) a) What is a coastal zones? Draw a schematic diagram of coastal zone representing beach profile, surf zone, off shore zone and explain each term in detial. **[8]**

b) Write short note about the estuaries, wet lands and lagoons, coastal dunes. **[9]**

OR

Q8) a) What are the causes of pollution in coastal zone? Discuss the various issues for disposal of waste/dredged spoils in the coastal zones. **[8]**

b) How the oil spills and contaminants causes the pollution in sea water? What are the primary reasons of oil pills? What are remedial measures to reduce the pollution caused by the oil spills? **[9]**

Total No. of Questions : 8]

SEAT No. :

PB2219

[Total No. of Pages : 2

[6263]-56
B.E. (Civil Engineering)
ADVANCED DESIGN OF CONCRETE STRUCTURES
(2019 Pattern) (Semester - VII) (Elective - III) (401003 B)

Time : 3 Hours] *[Max. Marks : 70*

Instructions to the candidates:

1) ***Answer Q.1 or Q.2, Q.3 or Q.4, Q.5 or Q.6; and Q.7 or Q.8.***
2) ***Figures in bold to the right, indicate full marks.***
3) ***IS 456, IS 3370, IS 1893 and IS 13920 are allowed in the examination.***
4) ***The designs should comply with the latest codal provisions.***
5) ***If necessary, assume suitable data and indicate clearly.***
6) ***Use of electronic pocket calculator is allowed.***

Q1) a) Explain with neat sketches, four different types of back fill conditions. **[4]**

b) Propose suitable dimensions and perform the stability analysis for L-shaped retaining wall provided to retain a horizontal leveled backfill of height 3m having unit weight respectively equal to 18 kN/m^3. Angle of repose = 31º, Coefficient of friction between concrete and soil = 0.6, SBC of soil = 150 kN/m^2, depth of foundation 1.0 m. **[13]**

OR

Q2) A L-shaped retaining wall of height 4 m is to be provided to retain a surcharged backfill having unit weight equal to 18 kN/m^3 with angle of repose 30°. The angle of surcharge is 20º. Coefficient of friction between concrete and soil = 0.50, SBC of soil = 180 kN/m^2, depth of foundation = 1.0 m. Carry the stability analysis and design the retaining wall showing the details of reinforcement. **[17]**

Q3) a) Using IS code method, determine the bending moments and hoop tension at 1m interval of height for a circular water tank of height 5 m and diameter 5 m. The tank wall is free at top and hinged at bottom. Design the wall for the maximum actions. Detailing not required. **[10]**

b) Describe the approximate method of analysis for rectangular water tank of length L, width B and height H for conditions L/B ≤ 2 and L/B>2. **[8]**

OR

Q4) Design the wall of a rectangular water tank of size 7.0 m × 4.0 m × 3.0 m. Use Fe 500 grade of steel and M30 grade of concrete. Draw the detailing of reinforcement in sectional plan and elevation. **[18]**

P.T.O.

Q5) a) Explain in detail the steps for design of shear wall with boundary elements and show schematic sketch of the ductile detailing of the reinforcement for shear wall. **[10]**

b) Draw schematic sketches of types of shear wall. How is the location of shear wall decided? Explain the failure patterns for a shear wall. **[8]**

OR

Q6) a) Describe the functions of shear walls. Also emphasis the role of boundary elements in the shear wall. **[4]**

b) Design a ductile solid shear wall of length 4m and height 15 m without boundary elements, for a residential building, located in seismic zones IV. Use M30 grade concrete and Fe500 grade of steel. The RC shear wall is subjected to the following loadings. Shear Force = 600 kN, axial force =8000 kN, and moment = 5,200 kNm. **[14]**

Q7) a) Using seismic coefficient method calculate the base shear for an unbraced building located in Delhi. The building is having plan dimensions 24 m × 24 m having 4 similar bays in both direction. The soil conditions are medium stiff. The R. C. frames are infilled with brick-masonry. The lumped weight due to dead loads is 11 kN/m^2 on floors and 10 kN/m^2 on the roof. The floors are to cater for a live load of 4 kN/m^2 on floors and 1.0 kN/m^2 on the roof. The total height of the building is 10.5 m with floor height as 3.5 m. Calculate the base shear and show shear distribution over the height of the building. **[12]**

b) Explain in detail any one method for the approximate analysis of lateral loads for a multistory frame. **[5]**

OR

Q8) a) Analyse the substitute frame consisting of two bays of equal length of 4.5 m and column of length 3.5 m. The continuous beam may be designated as ABC. Find the maximum sagging moment at the center of span and maximum hogging moment at A and B. Assume the frames of the building to be spaced at 3.5 m c/c. **[13]**

Consider the following data for analysis.

Thickness of floor = 150 mm

Live load = $2kN/m^2$

Floor finish = $1kN/m^2$

Overall size of beam = 230 mm × 450 mm

Size of column = 400 mm × 400 mm

b) Explain in brief the seismic coefficient method of analysis to find the lateral forces on a multistory frame. **[4]**

Total No. of Questions : 8]

SEAT No. :

PB2220

[Total No. of Pages : 2

[6263]-57

B.E. (Civil Engineering)

INTEGRATED WATER RESOURCES PLANNING AND MANAGEMENT

(2019 Pattern) (Semester - VII) (Elective - III) (401003 C)

Time : 2½ Hours] *[Max. Marks : 70*

Instructions to the candidates:

1) ***Answer Q.1 or Q.2, Q.3 or Q.4, Q.5 or Q.6, Q.7 or Q.8.***
2) ***Neat diagrams must be drawn wherever necessary.***
3) ***Figures to the right indicate full marks.***
4) ***Assume suitable data if necessary.***

Q1) a) Justify importance assessment of river water quality and write a brief note on prevention and control of surface water pollution. **[10]**

b) Explain polluters pay principle. **[8]**

OR

Q2) a) What is Environmental Impact Assessment (EIA) and what are its objectives, state methodology to carryout EIA. **[10]**

b) State any four CPCB regulations regarding water pollution control. **[8]**

Q3) a) State and explain principles of planning and financing water of water resources projects. **[10]**

b) Explain how water is economic good. **[7]**

OR

Q4) a) Explain framework for planning a sustainable water future. **[10]**

b) Explain in brief economics and decision making in IWRPM. **[7]**

Q5) a) What are water crises, explain its global and national perspective. **[10]**

b) State and explain rural local governing body water laws. **[8]**

OR

P.T.O.

Q6) a) State and explain UN laws on non-navigable uses of international water courses. **[10]**

b) State any four municipal corporation laws regarding water supply and drainage. **[8]**

Q7) a) Explain in detail role of dam in flood control and power generation and its importance in IWRPM. **[10]**

b) Explain importance of management of flood plains. **[7]**

OR

Q8) a) Explain in detail Use of QGIS in IWRPM. **[10]**

b) Explain application of soft computing in flood control. **[7]**

Total No. of Questions : 8]

SEAT No. :

PB4475

[Total No. of Pages : 2

[6263]-58R
B.E. (Civil Engineering)
FINITE ELEMENT METHOD
(2019 Pattern) (Semester - VII) (Elective - III) (401003 D)

Time : 2½ Hours] *[Max. Marks : 70*

Instructions to the candidates:

1) ***Attempt Q.1 or Q.2, Q.3 or Q.4, Q.5 or Q.6, Q.7 or Q.8.***
2) ***Neat diagrams must be drawn wherever necessary.***
3) ***Figures to the right indicates full marks.***
4) ***Assume suitable data, if necessary and clearly state.***

Q1) a) Determine the shape functions for a CST element. Show that they are nothing but are a coordinates. **[9]**

b) Using generalized coordinates approach, determine shape functions for two nodded beam elements and apply necessary check. **[8]**

OR

Q2) a) Using Serendipity concept find shape functions for quadratic Serendipity family element. **[9]**

b) Using Lagrange functions write shape functions for the nine nodded rectangular element as shown in Figure 1. **[8]**

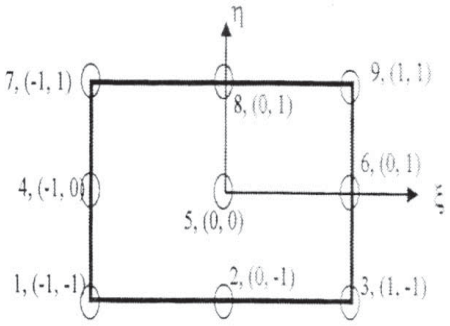

Figure 1

Q3) a) What is the special about the strains and stresses in tetrahedral element. **[8]**

b) Derive the element stiffness matrix and strain displacement matrix for a 4-noded isoparametric quadrilateral element. **[9]**

OR

Q4) a) Write short note on **[8]**

i) Uniqueness of mapping of isoparametric formulation.

ii) Jacobian Matrix

b) Explain the isoparametric concept in finite element analysis. **[9]**

P.T.O.

Q5) Analyse the beam as shown in figure 2 using finite element method. Take *EI* = constant. **[18]**

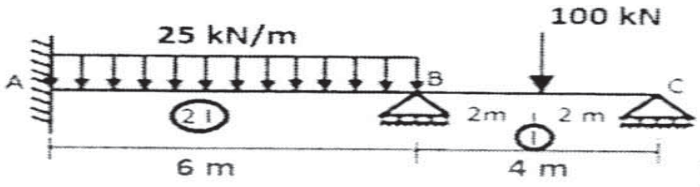

Figure 2

OR

Q6) Analyze the truss as shown in figure 3. Cross-sectional area of members are AB = 1000 mm^2, BC = 800 mm^2, CA = 800 mm^2. Take E = 2×10^5 MPa.**[18]**

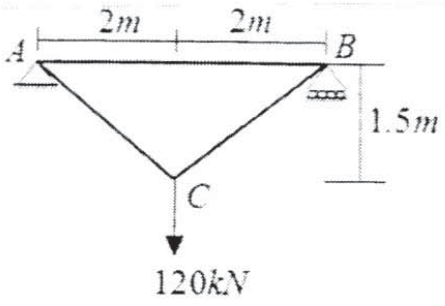

Fig. 3

Q7) Analyze the portal frame as shown in figure 4 using finite element method. Take EI constant. Neglect axial deformation. **[18]**

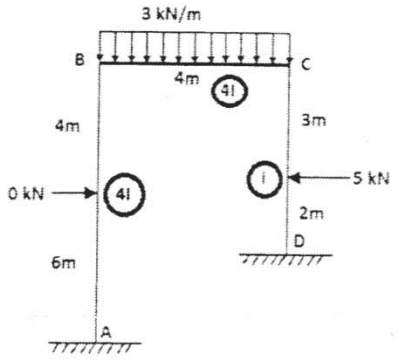

Fig. 4

OR

Q8) a) Derive the transformation matrix for grid element. **[9]**

b) Derive the member stiffness matrix for plane frame element. **[9]**

Total No. of Questions : 8]

SEAT No. : ____

PB2222

[Total No. of Pages : 4

[6263]-59
B.E. (Civil)
DATA ANALYTICS
(2019 Pattern) (Semester - VII) (Elective - III) (401003 E)

Time : 2½ Hours] ***[Max. Marks : 70***

Instructions to the candidates:

1) ***Attempt Q.1 or Q.2, Q.3 or Q.4, Q.5 or Q.6, Q.7 or Q.8.***
2) ***Figures to the right indicate full marks.***
3) ***Assume suitable data, if necessary.***
4) ***Neat diagrams must be drawn wherever necessary.***

Q1) a) Discuss the conditions in which the following sampling types will be utilized: **[6]**

i) Random Sampling

ii) Convivence sampling

iii) Quota Sampling

iv) Systematic sampling

v) Cluster sampling

vi) Simple Sampling

b) Following are the values of import of raw material and export of finished product in suitable units: **[6]**

Export	10	11	14	14	20	22	16	12	15	13
Import	12	14	15	16	21	26	21	15	16	14

Calculate the coefficient of correlation between the import values and export values.

c) Calculate the rank correlation coefficient for the rank of 10 bricks assigned by 2 site engineers. **[6]**

Bricks	1	2	3	4	5	6	7	8	9	10
Site Engineer 1	8	7	6	3	2	1	4	9	10	5
Site Engineer 2	10	8	5	2	1	3	6	9	7	4

OR

P.T.O.

Q2) a) Discuss the Law of Statistical Regularity and Law of Inertia of Large numbers. **[6]**

b) Obtain regression lines for the following data: **[6]**

x	6	2	10	4	8
y	9	11	5	8	7

c) The ranking of 10 individuals at the start and finish of a training course are as follows:

Calculate the Spearman's Rank correlation coefficient and interpret the value. **[6]**

Individual	A	B	C	D	E	F	G	H	I	J
Rank (Before)	1	6	3	9	5	2	7	10	8	4
Rank(After)	6	8	3	2	7	10	5	9	4	1

Q3) a) Explain following methods of Hypothesis testing: **[5]**

i) Chi-square test

ii) Type I and type II Erros

b) The life time of electric bulbs for a random sample of 10 from a large consignment gave the following data from the table. Can we accept the hypothesis that the average lifetime of bulbs is 4000 hours? (Apply t test. At v = 9, $t_{0.05}$ = 2.262) **[6]**

Item	1	2	3	4	5	6	7	8	9	10
Life in 000 hours	4.2	4.6	3.9	4.1	5.2	3.8	3.9	4.3	4.4	5.6

c) A sample of 10 is drawn randomly from a certain population. The sum of the squard deviations from the mean of the given sample is 50. Test the hypothesis that the variance of the population is 5 at 5 per cent level of significance. Use χ^2 test. (χ^2 at 5 per cent level for 9 d.f. is 16.92). **[6]**

OR

Q4) a) Explain: **[5]**

i) Hypothesis and hypothesis testing

ii) One and two-sided hypothesis

b) The mean of a certain production process is known to be 50 with a standard deviation of 2.5. The production manager may welcome any change in mean value towards higher side but would like to safeguard against decreasing values of mean. He takes a sample of 12 itmes that gives a mean value of 48.5. What inference should the manager take for the production process on the basis of sample results? Use 5 per cent level of significance for the purpose. (table value: R : $z < -1.645$) **[6]**

c) A simple random sampling survey in respect of monthly earnings of semi-skilled workers in two cities gives the following statistical information: Test the hypothesis at 5 per cent level that there is no difference between monthly earnings of workers in the two cities. **[6]**

City	Mean monthly earnings (□)	Standard deviation of Sample data of monthly earnings(□)	Size of sample
A	695	40	200
B	710	60	175

Q5) a) Explain with suitable examples: **[6]**

i) Data analytics life cycle

ii) Residual Analysis

b) A student has obtained the following regression equations. Do you feel they are correct? Explain with reason. $6X = 15Y + 21$ and $21X + 14Y = 56$. **[6]**

c) A manufacturer of flooring tiles has the following data on the cost per unit in □ on the cost per unit of a certain made tiles and the number of units made in each order, obtain the two regression equations and correlation coefficient. **[6]**

Order number	1	2	3	4	5	6
X	1	3	5	7	10	12
Y	58	52	46	40	37	22

OR

Q6) a) Explain with suitable examples: **[6]**

i) Data Comparing

ii) Data Reporing

iii) Data Analysis

b) Fit a regression of expenditure (Y) on Income (X) by method of least squares **[6]**

Income (₹'000)	41	65	50	57	96	94	110	30	79	65
Expenditure (₹'000)	44	60	39	51	80	68	84	34	55	48

c) Given the following data obtain the yield when the rainfall is 75 cm. The coefficient of correlation between yield and rainfall is 0.8. **[6]**

	Rainfall (cm)	Yield per acre
Mean	67.5	90
S.D.	7.5	15

Q7) a) Describe the situations when supervised, unsupervised, reinforced learning will be used. **[5]**

b) Explain with an example logistics regression. **[6]**

c) Discuss the applications of Support vector machines in classification and regression. **[6]**

OR

Q8) a) Discuss the Decision Tree Classification Algorithm. **[5]**

b) Explain in detail K means clustering with a suitable application. **[6]**

c) Discuss over fitting and train/test splits in model development. **[6]**

Total No. of Questions : 8]

SEAT No. :

PB2223

[Total No. of Pages : 4

[6263]-60
B.E. (Civil)
OPERATIONS RESEARCH
(2019 Pattern) (Semester - VII) (401003 F) (Elective - III)

Time : 2½ Hours] *[Max. Marks : 70*

Instructions to the candidates:

1) ***Solve Q.1 or Q.2, Q.3 or Q.4, Q.5 or Q.6, Q.7 or Q.8.***
2) ***Figures to the right indicate full marks.***
3) ***Use of calculator is allowed.***
4) ***Assume suitable data if necessary.***

Q1) a) Solve following example using Big M Method. **[8]**

Maximize $Z = 9x_1 + 6x_2$

Subject to

$5x_1 + 4x_2 \geq 20$

$x_1 + 2x_2 \leq 8$

$x_1, x_2 \geq 0$

b) Explain the difference between Big M method and Two Phase method. **[4]**

c) Explain following terms: **[6]**

i) Slack variables

ii) Surplus variable

iii) Artificial variable

OR

Q2) a) Solve using Simplex method **[8]**

Maximize $Z = 6x_1 + 6x_2$

Subject to

$5x_1 + 4x_2 \leq 20$

$x_1 + 2x_2 \leq 8$

$x_1, x_2 \geq 0$

b) Explain the Linear Programming Problems and various terms used in it by giving suitable example. **[6]**

P.T.O.

c) Construct dual of the primal equations. **[4]**

Minimize $Z = 6x_1 - 5x_2 + 8x_3$

Subject to

$3x_1 + 5x_2 + 4x_3 \leq 15$

$6x_1 + x_2 + 3x_3 \geq 4$

$7x_1 - 2x_2 - x_3 \leq 10$

$x_1 - 2x_2 + 5x_3 \geq 3$

$4x_1 + 7x_2 - 2x_3 \geq 2$

$x_1, x_2, x_3 \geq 0$

Q3) a) What is degeneracy in transportation problem? How is it resolved? **[4]**

b) What is unbalanced transportation problem? How is it solved? **[4]**

c) A department head has 4 subordinates and 4 jobs. The subordinates differ in efficiency and requirement varies as per job. The time (in hours) estimates for each subordinate to perform each job are given below. Find the allocation that minimizes the total time giving one job to each person. **[10]**

Subordinates	Jobs 1	2	3	4
A	8	26	17	11
B	13	28	4	26
C	38	19	18	15
D	19	26	24	10

OR

Q4) a) Write a short note on assignment problem and its applications in Civil Engineering. **[4]**

b) Compare assignment problem with transportation problem. **[4]**

c) Find initial solution of the following transportation problem using. **[10]**

i) Least cost method

ii) N-W corner method

iii) Column minima method

	A	B	C	Supply
1	20	70	40	50
2	30	30	10	80
3	50	40	70	70
4	10	60	20	140
Demand	70	90	180	

Which method gives the least cost for the above problem?

Q5) a) Optimize Z = $x_1^2 + x_2^2 + 3x_3^2 + 10x_1 + 8x_2 + 6x_3 - 100$ **[6]**

Subject to $x_1 + x_2 + x_3 = 20$

$x_1, x_2, x_3 \geq 0$

Use Lagragian Multiplier technique.

b) Carry out the calculation for finding the maxima of following equation using Fibonacci method with 1% accuracy in the interval (0, 5) upto two iterations only. **[8]**

Maximize $f(x) = 12x^5 - 45x^4 + 40x^3 + 5$

c) Distinguish between Golden section method and Dichotomous Search method. **[3]**

OR

Q6) a) Maximize $Z = 6x_1 + 8x_2 - x_1^2 - x_2^2$ using Lagrangian Multiplier method **[8]**

Subect to

$4x_1 + 3x_2 = 16$

$3x_1 + 5x_2 = 15$

$x_1, x_2 \geq 0$

b) What are the similarities between Golden section and Fibonacci method? **[5]**

c) What are the managerial decisions making applications of mathematical programming models in which non linear objective functions, constraints and their solutions are expected? **[4]**

Q7) a) Consider following payoff matrix for two firms. **[10]**

Firm X Y Z

Firm ABC	X	Y	Z
A	75	52	44
B	84	80	55
C	92	74	81

i) Check whether there exists saddle point

ii) Give optimum strategy for both the firms

iii) Find the value of Game

b) Find the shortest path between nodes 1 and 8 using Dynamic programming method **[7]**

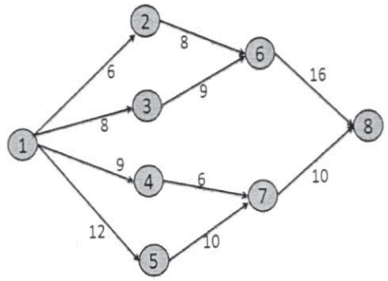

The numbers on the arrows represent the distance in kms.

OR

Q8) a) A wheel loader is purchased for Rs.30 lacs with expected life as 10 years. The running cost and resale price in lacs of Rs. is given in the following table.

Year	1	2	3	4	5	6	7	8	9	10
Running cost	1	2	2.5	3	4	7	9	11	12.5	15
Resale price	24	21	20	19	16	14	12	10	7	5

Find the replacement year for the wheel loader. **[9]**

b) Write the applications of following OR techniques in the field of Civil Engineering **[8]**

i) Dynamic Programming

ii) Games Theory

◀▶ ◀▶ ◀▶

Total No. of Questions : 8]

SEAT No. :

PB-2224

[Total No. of Pages : 2

[6263]-61

B.E. (Civil Engineering)

AIR POLLUTION AND CONTROL

(2019 Pattern) (Semester - VII) (401004A) (Elective - IV)

Time : 2½ Hours] *[Max. Marks : 70*

Instructions to the candidates:

1) ***Answer Q.1 or Q.2, Q.3 or Q.4, Q.5 or Q.6, Q.7 or Q.8.***
2) ***Figures to the right indicates full marks.***
3) ***Draw neat figures wherever necessary.***
4) ***Assume necessary data.***
5) ***Use of scientific calculators is allowed.***

Q1) a) Discuss basis and statistical considerations of sampling sites. **[6]**

b) Explain the purpose of ambient air and stack gas sampling. **[6]**

c) Compare national ambient air quality standards, 2009 and WHO air quality guidelines 2021. **[6]**

OR

Q2) a) State the objectives of ambient air monitoring. **[6]**

b) Explain with a neat sketch location of sampling ports and traverse points in case stack sampling. **[6]**

c) Discuss the components of air quality standards. **[6]**

Q3) a) Define emission factor and relate its significance in preparation of emission inventory. **[6]**

b) Classify air quality models based on time period, pollutant type and level of sophistication. **[6]**

c) Compare the physical, statistical and deterministic air quality models. **[5]**

OR

P.T.O.

Q4) a) Explain the role of emission inventory in air quality management. **[6]**

b) Enumerate and discuss the basic components and importance of air quality modelling. **[6]**

c) State the basic equation of emission estimation and describe its terminologies. **[5]**

Q5) a) Discuss the measures taken to control the emissions from vehicles. **[6]**

b) State and explain the carbon sequestration. **[6]**

c) State the principle mechanism, advantages and applications of cyclone as a particulate control equipment. **[6]**

OR

Q6) a) Explain the measures to be taken to control gaseous air pollutants. **[6]**

b) Describe the factors responsible for selection of particulate control equipment. **[6]**

c) Describe the control of air pollution at source by process modification, change of raw material and equipment modification. **[6]**

Q7) a) Explain the sources and remedial measures to control odour. **[5]**

b) Explain sick building syndrome and its solution. **[6]**

c) Relate improved ventilation to indoor air quality. **[6]**

OR

Q8) a) Explain the radon removal technique. **[5]**

b) Discuss the causes and mitigation technologies for indoor air pollution. **[6]**

c) List and explain the sources of contaminants in indoor air pollution. **[6]**

⌘⌘⌘

Total No. of Questions : 8]

SEAT No. : ____

PB-2225

[Total No. of Pages : 3

[6263]-62

B.E. (Civil)

ADVANCED DESIGN OF STEEL STRUCTURES

(2019 Pattern) (Semester - VII) (401004B) (Elective - IV)

Time : 3 Hours] ***[Max. Marks : 70***

Instructions to the candidates:

1) ***Answer Q.1 or Q.2, Q.3 or Q.4, Q.5 or Q.6 and Q.7 or Q.8.***
2) ***Neat sketches must be drawn wherever necessary.***
3) ***Figures to the right indicate full marks.***
4) ***Take f_y = 250 and f_e = 410 grade of steel.***
5) ***Take ultimate stress in bolt, f_{ub} = 400 N/mm^2.***
6) ***Assume suitable data, if necessary.***
7) ***Use of electronic pocket calculator, relevant IS codes and Steel table are allowed.***
8) ***Use of cell phone is prohibited in the examination hall.***

Q1) a) What are light gauge sections in the context of steel structures and how do they differ from traditional structural steel sections? **[5]**

b) Determine the allowable load for a column made from a light gauge section with a box profile measuring 120 × 120 mm with thickness of 1.6 mm. The column's effective length is 3 meters and the material has a yield strength of 235 N/mm^2. **[12]**

OR

Q2) a) Explain the advantages and disadvantages of using light gauge sections in steel structures. **[5]**

b) Two 180 × 80 mm channel sections with folded lips are joined by their webs to function as a beam. The plate thickness is 2.5 mm and the lip depth is 25 mm. The beam spans effectively for 4.1 meters. Calculate the permissible load that the beam can support, considering a material yield strength of 235 N/mm^2. **[12]**

P.T.O.

Q3) a) What are the key advantages of using tubular structures in engineering construction. **[5]**

b) Design a hollow circular steel section to carry axial tensile load of 200 kN. Its length is 2.5 m. It is at right angle with other member. Also design welded connection. **[13]**

OR

Q4) a) Explain the role of standard codes in the design of tubular structures. **[5]**

b) Design a hollow circular steel section to carry axial compressive load of 150 kN. Its length is 1.8 m. It is at right angle with other member. Also design welded connection. **[13]**

Q5) a) Explain the advantages of using castellated beams in construction and structural design. **[5]**

b) A simply supported beam carries total load including dead load and live load of 10 kN/m over the span of 11 m. Design castellated beam assuming compression flange is fully restrained. **[12]**

OR

Q6) a) Provide an overview of the codal provisions relevant to the design of castellated beams for bending and shear. **[5]**

b) Design castellated beam for a simply supported beam carries live load of 9 kN/m and dead load of 6 kN/m over a span of 12 m. Assume compression flange of beam is laterally supported throughout the span. **[12]**

Q7) Find the collapse load W for the portal frame as shown in figure 1. **[18]**

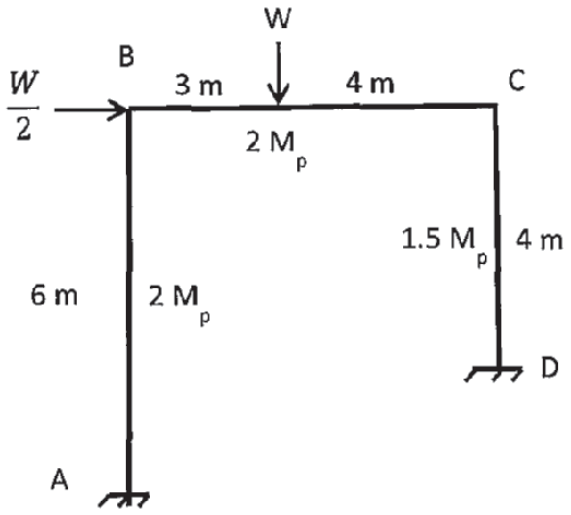

Figure 1

OR

Q8) Analyses the gable frame loaded and supported as shown in figure 2 and find plastic moment capacity M_p. Assume uniform cross section for all members of the frame. **[18]**

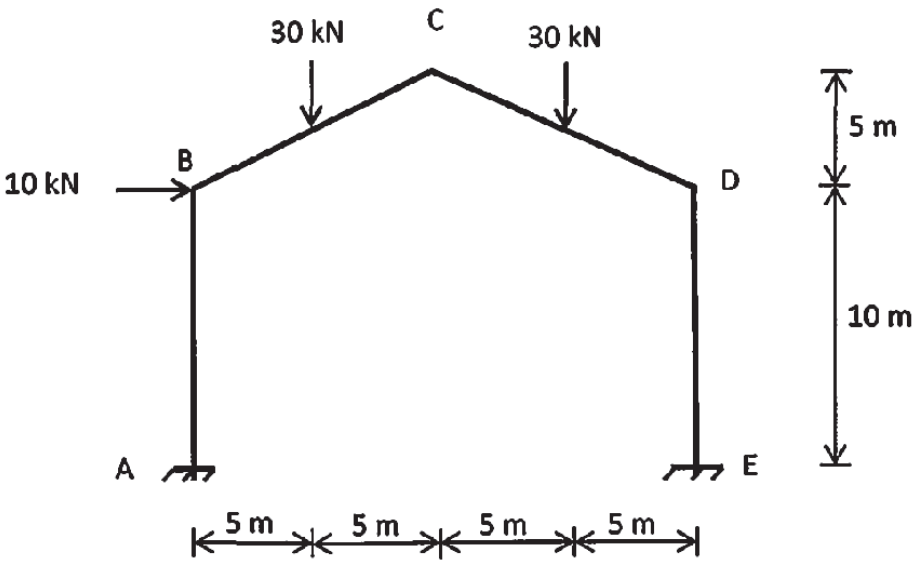

Figure 2

⌘⌘⌘

Total No. of Questions : 8]

SEAT No. :

PB-2226

[Total No. of Pages : 3

[6263]-63

B.E. (Civil)

STATISTICAL ANALYSIS AND COMPUTATIONAL METHODS

(2019 Pattern) (Semester - VII) (401004C) (Elective - IV)

Time : 2½ Hour] *[Max. Marks : 70*

Instructions to the candidates:

1) ***Answer Q1 or Q2, Q3 or Q4, Q5 or Q6, Q7 or Q8.***
2) ***Figures to the right side indicate full marks.***
3) ***Assume suitable data, if necessary.***
4) ***Use of electronic pocket calculator is allowed in the examination.***
5) ***Use of cell phone is prohibited in the examination hall.***

Q1) a) Write a short note on Data sampling, its types, methods of sampling and ideal sample size selection with relevant examples. **[5]**

b) Explain with an example Chi Square test. **[6]**

c) Write a short note on different types of samples with suitable examples on each. **[6]**

OR

Q2) a) Write a short note on Sampling Distribution of the Mean and the Central Limit. **[5]**

b) Explain with an example Student T test. **[6]**

c) Write a short note on Process of sampling and explain what is the meaning of "Null Hypothesis" **[6]**

Q3) a) Explain in detail assumptions of Chi Square test of Hypothesis. **[6]**

b) Suppose that sweets are sold in packages of fixed weight of the contents. The producer of the packages is interested in testing that average weight of contents in packages in 1 kg. Hence a random sample of 12 packages is drawn and their contents found (in kg) as follows :

1.05, 1.01, 1.04, 0.98, 0.96, 1.01, 0.97, 0.99, 0.98, 0.95, 0.97, 0.95.

Using the above data what should he conclude about the average weight of contents in the packets? Apply Student T Test **[6]**

P.T.O.

c) The demand for a particular spare part in a factory was found to vary from day-to-day. In a sample study the following information was obtained. **[6]**

Days	Mon	Tues	Wed	Thurs	Fri	Sat
No. of Parts Demanded	1124	1125	1110	1120	1126	1115

Test the hypothesis that the number of parts demanded does not depend on the day of the week. Apply Chi Square Test

OR

Q4) a) Explain in detail assumptions of Z test of Hypothesis. **[6]**

b) The figures given below are (i) the theoretical frequencies of a distribution and (ii) the frequencies of a normal distribution having the same mean, standard deviation and the total frequency as in (i). **[6]**

(I) 1,5,20,28,42,22, 15,5,2.

(II) 1,6,18,25,40,25, 18,6, 1.

Apply the $\chi 2$ test of goodness of fit.

c) In order to start new S.T. bus to a certain remote village it is required to get the average fare of ì 400 daily. Reports on number of passengers for 21 days revealed that the average daily collection of fare from the passengers was ì 390 with standard deviation of ì 40. Do these data support the demand of people for starting new bus to the village? [Use 5% l.o.s.] **[6]**

Q5) a) Explain Regression analysis and its significance to civil engineering with examples. **[6]**

b) Obtain regression lines for the following data : **[6]**

x	2	3	5	7	9	10	12	15
y	2	5	8	10	12	14	15	16

Find estimate of (i) Y when X = 6 and (ii) X when Y = 20.

c) If the two lines of regression are $9x + y - \lambda = 0$ and $4x + y = \mu$ and the means of x and y are 2 and –3 respectively, find the values of λ, μ and the coefficient of correlation between x and y. **[6]**

OR

Q6) a) Explain Correlation and its significance to civil engineering with examples. **[6]**

b) Find the lines of regression for the following data : **[6]**

x	10	14	19	26	30	34	39
y	12	16	18	26	29	35	38

and estimate y for $x = 14.5$ and x for $y = 29.5$.

c) Determine regression line for price, given the supply, hence estimate price when supply is 180 units, from the following information : x = supply, y = Price, n = 7, $\Sigma(x - 150) = 119$, $\Sigma(y - 160) = 84$, $\Sigma(x - 150)2 = 2835$, $\Sigma(y - 160)2 = 2387$, $\Sigma(x - 150)\ \Sigma(y - 160) = 525$. Also, find correlation coefficient between price and supply. **[6]**

Q7) a) Explain K-S test for goodness of fit. **[5]**

b) Given the table of points: Use least square method to fit a straight line to the data and find the value of y (22) **[6]**

x	0	2	4	6	8	12	20
y	10	12	18	22	20	30	30

c) Fit a curve $y = ax^b$ using the following data : **[6]**

x	2000	3000	4000	5000	6000
y	15	15.5	16	17	18

OR

Q8) a) Explain one and two-sided hypothesis. **[5]**

b) Fit a straight line of the form $y = mx + c$ to the following data, by using the method of least squares. **[6]**

x	0	1	2	3	4	5	6	7
y	–5	–3	–1	1	3	5	7	9

c) Following data refers to the load lifted and corresponding force applied in a pulley system. If the load lifted and effort required are related by equation effort = a * (load lifted) b, where a and b are constants. Evaluate a and b by linear curve fitting. **[6]**

Load lifted in kN	10	15.0	20.0	25.0	30.0
Effort applied in kN	0.750	0.935	1.100	1.200	1.300

Total No. of Questions : 8]

SEAT No. : ____

PB-2227

[Total No. of Pages : 2

[6263]-64
B.E. (Civil)
AIRPORT AND BRIDGE ENGINEERING
(2019 Pattern) (Semester - VII) (401004D) (Elective - IV)

Time : 2½ Hour] ***[Max. Marks : 70***

Instructions to the candidates:

1) ***Answer Q1 or Q2, Q3 or Q4, Q5 or Q6 and Q7 or Q8.***
2) ***Neat diagram must be drawn wherever necessary.***
3) ***Figures to the right indicate full marks.***
4) ***Assume suitable data if neccessary.***

Q1) a) Explain the necessity of airport drainage. **[6]**

b) What is BIM? Explain its benefits. **[6]**

c) Give comparison between the Highway and Airfield pavement. **[6]**

OR

Q2) a) Explain the factors affecting the design of Airport capacity. **[6]**

b) Briefly explain the application of Building Information Modelling (BIM) in airport engineering. **[6]**

c) Write a note on planning and design of airport pavement. **[6]**

Q3) a) What is the need of runway lightening and marking? **[6]**

b) Explain with neat sketch - **[6]**

i) Approach Lights

ii) Runway End Lights

iii) Taxiway Lights

c) Explain the type of runway marking. **[6]**

OR

Q4) a) Draw the neat sketch of Heliport orientation. **[6]**

b) Explain vertical take-off and landing, short take-off and Landing. **[6]**

c) What is Runway side strips marking? **[6]**

P.T.O.

Q5) a) Give detailed classification of the bridges. **[6]**

b) What are the characteristics of ideal bridge site? **[6]**

c) What is Afflux? Give Maririman's and Molesworth's equation to calculate afflux. **[5]**

OR

Q6) a) Enlist the design loads to be considered in case of Bridge. **[6]**

b) Explain the concept of linear waterway. **[6]**

c) Write short note on economic span of bridge. **[5]**

Q7) a) What is Culvert? Give its types. **[6]**

b) Explain in details Temporary bridges. **[6]**

c) Compare the salient features of Simply supported, continuous and cantilever bridges. **[5]**

OR

Q8) a) Give the functions of bearing in Bridges. Explain any one type of bearing with figure. **[6]**

b) What is moveable bridge? Enlist all types. Explain Any one **[6]**

c) Give factors affecting the location of the Culvert. **[5]**

Total No. of Questions : 8]

SEAT No. : [ ]

PB-2228

[Total No. of Pages : 3

[6263]-65
B.E.(Civil)
DESIGN OF PRESTRESSED CONCRETE STRUCTURES
(2019 Pattern) (Semester - VII) (401004E) (Elective - IV)

Time : 3 Hours] ***[Max. Marks : 70***

Instructions to the candidates:

1) ***Solve Q1 or Q2, Q3 or Q4, Q5 or Q6, Q7 or Q8.***
2) ***Neat diagrams must be drawn wherever necessary.***
3) ***Figures to the right indicate full marks.***
4) ***Use of electronic pocket calculator is allowed.***
5) ***IS1343:2012 and IS456:2000 code of practice are allowed.***
6) ***Assume suitable data if necessary.***

Q1) a) An I section post tensioned beam has 400 mm × 100 mm top flange; 200 mm × 100mm bottom flange; 100 mm thick web and 500 mm overall depth. The prestressing force is l000kN with tendon placed centrally at the ends. Design the end bearing plate. The strength of concrete at transfer is 40 MPa. **[10]**

b) The end block of a post tensioned beam is 300 mm × 500 mm. The prestressing force 600 kN with the tendon placed centrally at the ends. A bearing plate of 200mm × 200 mm is provided. Check the bearing stresses developed in concrete having strength, at transfer equal to 40 MPa. **[7]**

OR

Q2) a) A pre-tensioned pre-stress concrete beam of rectangular section is to be designed for ultimate moment of 125 kN.m. Design the section using M40 grade of concrete and f_{pu} = 1600N/mm^2. **[7]**

b) A prestress concrete I section beam is simply supported over a span of 8m supporting a live load of 4 kN/m. The beam has an overall depth of 400mm. The thickness of flange and web are 60mm and 80mm respectively. The width of the flange is 200mm. Find the eccentricity required for the prestressing force of 200kN such that the resultant stress is zero at the bottom fiber of central section. **[10]**

P.T.O

Q3) a) A slab spanning 10 m is to be designed as a one-way prestressed concrete slab with parallel post tensioned cables carrying an effective force of 400kN. The deck slab is required to support an udl of 8 kN/m^2. The permissible stresses in concrete should not exceed 14 N/mm^2 in compression and no tension is permitted at any stage. Design the spacing of the cables and their position at mid span section. Assume loss ratio 0.8. **[10]**

b) Design a post tension two-way slab of effective span 6m × 8m with continuity on all sides, subjected to superimposed load $4kN/m^2$. Take F.F. load = 1.5 kN/m^2. Use cable S_3 or S_4 fck = 40 N/mm^2, f_y of S_3 or S_4 = 1900 N/mm^2. Design the spacing of cable in both directions. Don't apply checks. **[8]**

OR

Q4) a) A slab spanning 10m is to be designed as a one-way prestressed concrete slab with parallel post tension cables carrying an effective force of 500kN. The deck slab is required to Support a udl of 10 kN/m^2. The permissible stresses in concrete should not exceed 12 N/mm^2 in compression and no tension is permitted at any stage. Design the spacing of the cables and their position at mid span section. Assume loss ratio 0.8. **[10]**

b) Design a post tension two-way slab of effective span 8m × 10m with continuity on all side, subjected to superimposed load 6 kN/m^2. Take F.F. load = 1.0 kN/m^2. Use cable S_3 or S_4, fck = 40 N/mm^2, fy of S_3 or S_4 = 1800 N/mm^2. Design the spacing of cable in both directions. Don't apply checks. **[8]**

Q5) Design a post tensioned flat slab for the following data. **[18]**

a) Centre to center distance between columns = 10m in both directions Column size-1000 mm square Floor is to be used for a hospital building.

b) Live load - 3 kN/m^2

c) Floor finish - 1kN/m^2

d) Materials - M40, multistrand cables

e) Slab with drop

OR

Q6) Design a post tensioned fiat slab for the following data. **[18]**

a) Centre to center distance between columns = 8m in both directions

b) Column size-600mm diameter Floor is to be used for an Parking floor of community building

c) Live load - 5 kN/m^2

d) Floor finish - 1 .5kN/m^2

e) Materials - M45, multistrand cables

f) Slab with drop

Q7) Fig.1 shows a two span continuous beam. Corresponding to the cable profile provided locate the pressure line due to prestress alone. The prestressing force is 800kN. **[17]**

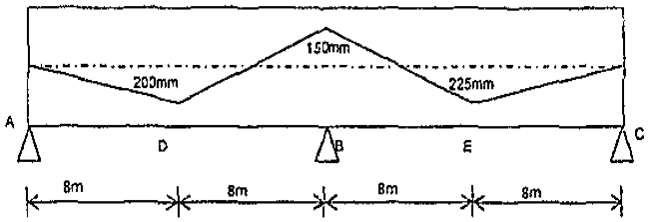

Figure 1

OR

Q8) Fig.2 shows a two span continuous beam. Corresponding to the cable profile provided locate the pressure line due to pre-stress alone. The pre-stressing force is 1250 KN. **[17]**

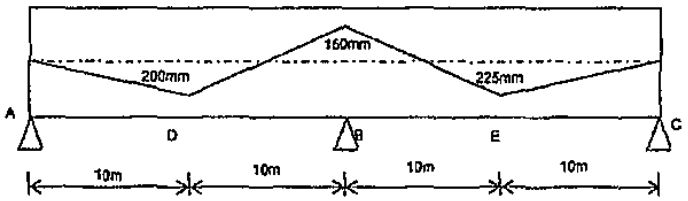

Figure 2



Total No. of Questions : 8]

SEAT No. :

PB-2229

[Total No. of Pages : 2

[6263]-66
B.E.(Civil)
FORMWORK AND PLUMBING ENGINEERING
(2019 Pattern) (Semester - VII) (401004 F) (Elective - IV)

Time : 2½ Hours] ***[Max. Marks : 70***

Instructions to the candidates:

1) ***Answer Q1 or Q2, Q3 or Q4, Q5 or Q6, Q7 or Q8.***
2) ***Neat diagrams must be drawn wherever necessary.***
3) ***Figures to the right side indicate full marks.***
4) ***Use of electronic pocket calculator is allowed.***
5) ***Assume suitable data if necessary and refer IS-12183 for numerical.***

Q1) a) Explain formwork design concept of RCC wall with neat sketch. **[8]**

b) Explain the design consideration of formwork in details **[5]**

c) Draw the neat sketch of RCC wall formwork with its component parts. **[4]**

OR

Q2) a) Write in brief about different loads to be consider for the designing the formwork of slab. **[8]**

b) Draw the neat sketch of slab formwork with its component parts. **[5]**

c) Enlist the Environmental load on forrnwork. **[4]**

Q3) a) Explain the different waterborne diseases. **[9]**

b) Explain the prevention of waterborne disease. **[9]**

OR

Q4) a) Role and responsibilities of plumbing designer. **[9]**

b) Explain in detail role of plumber. **[9]**

Q5) a) Describe the minor losses in pipes with sketch. **[8]**

b) Enlist the types of water distribution systems in buildings explain any one with sketch. **[9]**

OR

Q6) a) How dose grease trap work in detail with sketch. **[8]**

b) Enlist the types of drainage systems in buildings explain any one with sketch. **[9]**

Q7) a) Explain the design consideration of plumbing system. **[8]**

b) Explain drainage air test and drainage water test procedure. **[6]**

c) Write the number of water fixture unit for WC, wash basin, bath tub and shower. **[4]**

OR

Q8) a) Calculate the total number of fixture unit for the G+l residential building having 2 bath room shower, 1 kitchen sink with 15 mm tap, 2 water closet, 2 bath tub, 3 wash basin. **[8]**

b) Explain in detail about manhole in sewer line with neat sketch. **[6]**

c) Write down the different water supply demand based on population projection for different type of building as per Indian Standard. **[4]**



Total No. of Questions: 8]

SEAT No. : ____

PB2230

[Total No. of Pages :2

[6263]-67
B.E. (Civil Engineering)
DAMS AND HYDRAULICS STRUCTURES
(2019 Pattern) (Semester-VIII) (401011)

Time : 2½ Hours] ***[Max. Marks : 70***

Instructions to the candidates:

1) ***Answer Q.1 or Q.2, Q.3 or Q.4, Q5 or Q6, Q7 or Q8.***
2) ***Neat diagrams must be drawn wherever necessary.***
3) ***Figures to the right indicate full marks.***
4) ***Assume suitable data if necessary and state them in your answer clearly.***
5) ***Use non-programmable pocket size electronic calculator is allowed.***

Q1) a) Explain any one spillway with sketch. **[5]**

b) Explain main components of spillway. **[5]**

c) Explain the concept of energy dissipation below spillway. **[7]**

OR

Q2) a) Explain any one type of spillway gates. **[5]**

b) Explain the concept of energy dissipator & its importance. **[5]**

c) Design an ogee spillway for concrete gravity dam, for the following data. **[7]**

i) Average river bed level =160 m

ii) Slope of D/S=0.75H: 1V, u/s face is vertical

iii) Spillway crest RL=265m

iv) Desing discharge=5750 m^3/s

v) Spillway length is 6 spans with a clear length of 7 m each.

vi) Pier thickness=2m.

Q3) a) Enlist different causes of failure of earthen dams and explain any one **[5]**

b) Define earthen dam & explain in details limitations of earth dam **[5]**

c) Explain various seepage control measures in eathen dam **[8]**

OR

P.T.O.

Q4) a) Explain types earth dam based on method of construction **[5]**

b) Draw various component of earthen dam **[5]**

c) Determine the factor of safety of downstrem slope of (homogeneous section) an earth dam drawn to a scale of 1:650, for the following data: **[8]**

Area of N-rectangle=20cm^2
Area of T-rectangle=10cm^2
Area of U-rectangle=5cm^2
Length of slip circle arc=20cm
angle of internal friction=26°
cohesion c = 24 kg/m^2
specific weight of soil=18 kN/m^3

Q5) a) What are the advantages of canal lining **[5]**

b) Explain the components of canal system with neat sketch **[5]**

c) Explain design of canal by Kennedy's theory **[7]**

OR

Q6) a) What is canal? Explain any one types of canals based on function. **[5]**

b) What is a Canal Fall? Explain any one types of canal fall. **[5]**

c) Enlist & elaborate the steps in designing of trapezoidal lined canal. **[7]**

Q7) a) Explain the concept of weir. **[5]**

b) Draw layout plan of diversion head works and label all its components **[5]**

c) Explain in brief: **[8]**

i) Super passage
ii) Siphon aqueduct

OR

Q8) a) Explain the importance of exit gradient. **[5]**

b) Explain lane's creep theories of seepage **[5]**

c) Explain in brief: **[8]**

i) Level crossing
ii) Super passage



Total No. of Questions : 8]

SEAT No. :

PB4399

[Total No. of Pages : 3

[6263]-68

B.E. (Civil)

QUANTITY SURVEYING CONTRACTS AND TENDERS

(2019 Pattern) (Semester - VIII) (401012)

Time : 3 Hours] *[Max. Marks : 70*

Instructions to the candidates:

1) ***Answer Q1 or Q2, Q3 or Q4, Q5 or Q6, Q7 or Q8.***
2) ***Neat diagrams must be drawn wherever necessary.***
3) ***Figures to the right indicate full marks.***
4) ***Use of electronic pocket calculator is allowed.***
5) ***Assume suitable data if necessary.***

Q1) a) What are the factors to be considered while preparing detailed estimates? **[8]**

b) Determine the quantity of steel reinforcement in slab for both room from fig in 8mm ϕ bar provided @120mm c/c along short & long span with alternate bent up bar, determine the quantity of reinforcement. **[9]**

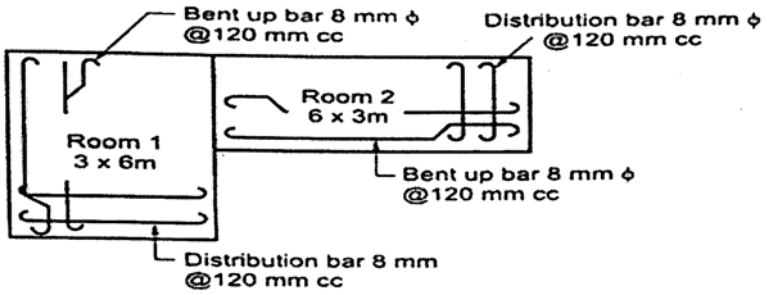

OR

Q2) a) Fig shows plan and section of residential building determine the quantities of following item by PWD method (assume any suitable data) **[8]**

i) Excavation in foundation

ii) Pcc in foundation

iii) UCR masonry in cm (1:6) in foundation

P.T.O.

iv) Damp proof coarse 3cm thick.

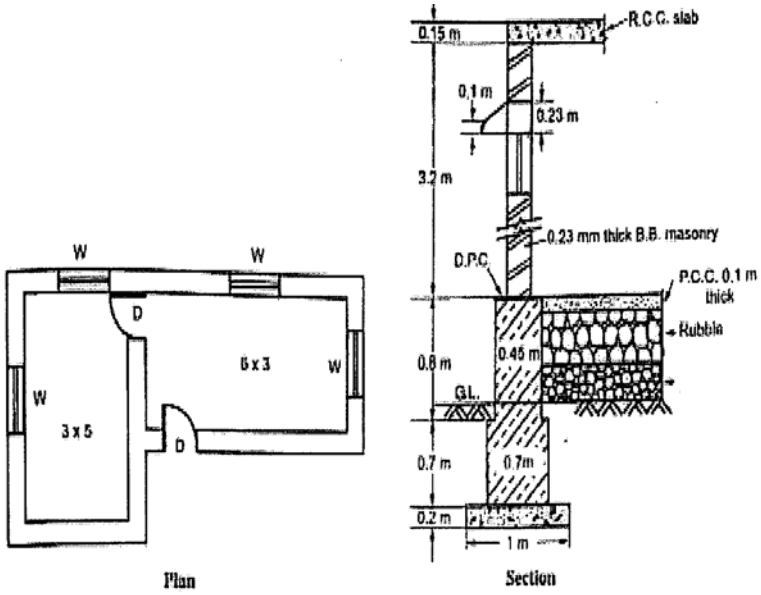

b) Explain in detail concept of long wall short wall and Centre line method with the help of example. **[9]**

Q3) a) Calculate for an embankment by mean area method workout the qualities of earthwork for an embankment 100m long and 10m width at the top side slope 2:1 and the depth of each 20m and are 0.6, 1.2, 1.4, 1.6, 1.5 m respectively. **[8]**

b) Differentiate between following methods : **[9]**

i) Mid sectional area method & mean sectional area method

ii) Trapezoidal formula & Prismoidal formula

OR

Q4) a) Calculate the quantities of earthwork foe 200m length for portion of road in the uniform ground the height of banks at two ends being 1.0m and 1.60m. the formation width is 10m and side slope is 2:1 (H:V). assume that there is no transverse slope. **[9]**

b) Explain different methods to work out the earthwork quantity for roads and canals. **[8]**

Q5) a) Briefly explain **[9]**

i) Brief specifications

ii) Detailed specifications

b) Using the standard format conduct the rate analysis for the following item of work - brickwork in a cement mortar 1:6 (take a brick size as 19cm × 9cm × 9cm) **[9]**

OR

Q6) a) Draft a detailed specification for materials, labour, workshop, mode of measurement etc. for the UCR masonry in foundations and plinth. **[9]**

b) Explain the factors to be considered while determining rate per unit of an item. **[9]**

Q7) a) Explain with example five purpose of valuation. **[6]**

b) Discuss five factors that affect the value of property. **[6]**

c) What is depreciation? List the different methods of calculating depreciation. Explain any one **[6]**

OR

Q8) a) State four methods of computing depreciation. Explain any one in details.**[6]**

b) Explain the concept of freehold and lease hold property. **[6]**

c) A building is constructed at a cost of 5lakh. The life of a building may be assumed to be 80 years and scrap value of building to be 10% of building cost. Determine the depreciation in 40 years use the straight line method. Cost percentage method and sinking fund method assuming 8% of compound interest. **[6]**

Total No. of Questions : 8]

SEAT No. :

PB2231

[Total No. of Pages : 3

[6263]-69

B.E. (Civil)

EARTHQUAKE ENGINEERING

(2019 Pattern) (Semester - VIII) (Elective - V) (401013 A)

Time : 2½ Hours] *[Max. Marks : 70*

Instructions to the candidates:

1) ***Answer Q1 or Q2, Q3 or Q4, Q5 or Q6, Q7 or Q8.***
2) ***Figures to the right indicate full marks.***
3) ***Neat diagrams should be drawn wherever necessary.***
4) ***IS 1893 and IS 13920 are permitted in the examination.***

Q1) Derive the expression for eigen values and eigen vectors for the system shown in Fig. 1. Consider m_1 = 2kg, m_1 = 5kg, k_1 = 10N/m, k_2 = 20N/m, k_3 = 5N/m. The initial conditions are $x_1(0) = 0.1m, x_2(0) = 0,\ \dot{x}_1(0) = 0$ and $\dot{x}_2(0) = 5m/s$. **[18]**

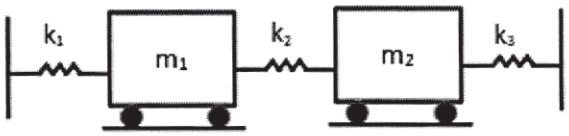

Fig. 1

OR

Q2) Calculate the natural frequencies and plot the mode shapes for the system shown in Fig. 2 Consider $k_1 = k$, $k_2 = 2k$, $k_3 = 3k$, $m_1 = m$, $m_2 = 2m$, and $m_3 = 3m$. **[18]**

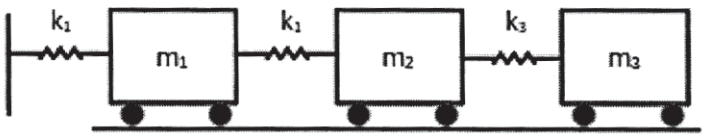

Fig. 2

P.T.O.

Q3) Determine the total base shear as per the provisions of IS : 1893 and distribute along the height of the building for the building shown in Fig. 3. Consider the following data for the calculation. **[17]**

a) Size of columns – (350 × 450)mm;

b) Size of beams – (350 × 450) mm;

c) Thickness of slab – 200 mm;

d) Live load – 4.5kN/m^2;

e) Location of the building – zone II;

f) Soil condition – rock.

Any additional data required may be suitably considered.

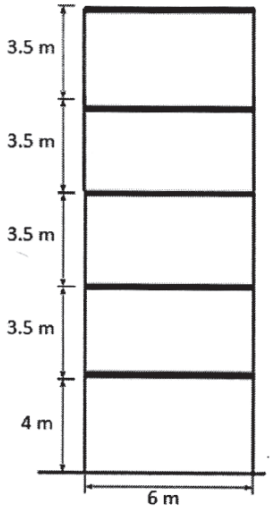

Fig. 3

OR

Q4) For the data given in Q.3, determine the total base shear as per the provisions of IS: 1893 and distribute along the height of the building if it is located in zone III. **[17]**

Q5) a) Explain the difference between the static and dynamic analysis of structures. **[9]**

b) Explain the provisions of IS : 1893 for the dynamic analysis of structures. **[9]**

OR

Q6) The natural periods, and mode shapes for vibration of a building are given below. Calculate the design seismic forces by the dynamic analysis method. Any additional data needed may be suitably considered and clearly mentioned. **[18]**

Natural		Mode 1	Mode 2	Mode 3	Mode 4
Period's		0.5	0.3	0.2	0.1
	Weight, kN	Mode Shapes			
4th floor	3,800	1.0	1.0	1.0	1.0
3rd floor	4,500	0.3	0.2	–1.2	–0.8
2nd floor	4,500	0.2	–1.1	–0.7	–0.5
1st floor	4,500	0.8	–0.5	0.3	0.2

Q7) a) What are lateral load resisting systems? Explain with neat diagrams. **[9]**

b) What does the term 'torsion' mean in the context of building structures, and how is it taken into account during the design process to ensure structural integrity? **[8]**

OR

Q8) a) What is ductile detailing in the context of RC structures, and how does it contribute to the earthquake-resistant design of buildings? **[9]**

b) Explain the concept of shear walls and use clear diagrams to illustrate the different types of shear walls. **[8]**

Total No. of Questions: 8]

SEAT No. : ____

PB2232

[Total No. of Pages :3

[6263]-70
B.E. (Civil)
STRUCTURAL DESIGN OF BRIDGES
(2019 Pattern) (Semester-VIII) (Elective-V) (401013 B)

Time : 2½ Hours] ***[Max. Marks : 70***

Instructions to the candidates:

1) ***Answer Q.1 or Q.2, Q.3 or Q.4, Q5 or Q6, Q7 or Q8.***
2) ***Figuers in bold to the right indicate full marks.***
3) ***Neat diagrams should be drawn wherever necessary.***
4) ***Is 1343, IRC 6, IRC 112, Bridge Rules and steel table are permitted in the examination.***

Q1) Design the external prestressed post-tensioned concrete girder shown in Fig.1 **[18]**

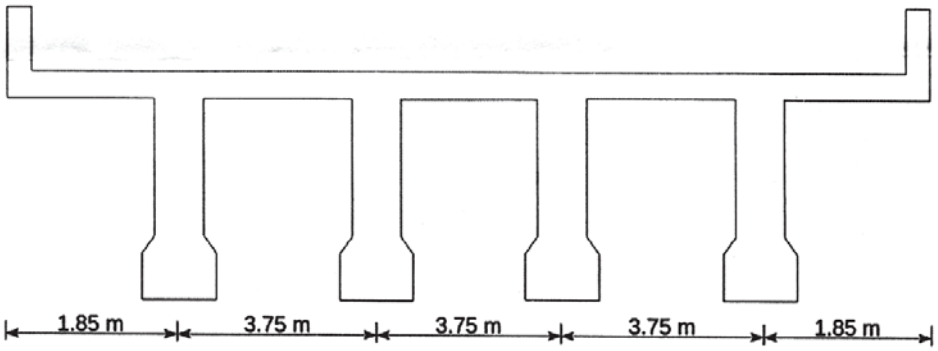

Fig. 1

The live load on the deck slab is IRC Class AA loading. The following material properties shall be considered for the design.

a) M-35 grade concrete for the deck slab and M-60 grade for the girders;

b) Ultimate tensile of the steel used in the girders is 2100 MPa;

c) Comporessive strength of concrete at tansfer is 36 Mpa;

d) The loss in the prestress may be taken as 12% Any additional data required may be suitably considered

OR

Q2) For the problem data given in Q.1, design the intermediate prestressed post-tensioned concrete girder, if the live load on the deck slab is IRC Class A loading. **[18]**

P.T.O.

Q3) A railway welded plate girder bridge is to be designed for the given data: **[17]**

a) Span=42.0 m;

b) Total load for bending moment for each track = 340.1 tonners;

c) Total load for shear force=365.5 tonnes;

d) CDA=0.357;

e) Yield stress of steel = 410N/mm^2.

Design the cross section of the plate girder and the end stiffeners. Assume suitable if additional data is required.

OR

Q4) For the data given in Q.3 design the cross section and the intermediate transverse stiffeners. **[17]**

Q5) Figure 2 shows the schematic of a single line BG railway bridge. The details for bridge are as follows. **[18]**

a) Spacing of stringers = 1.9m;

b) Weight of sleeper per meter on each girder =0.5 kN/m;

c) Weight of rail per meter=0.45 kN/m;

d) EUDL for bending moment=4379 kN;

e) EUDL for shear force = 4823 kN;

f) Impact factor CDA=0.29;

g) Intensity of wind load=1.5 kN/m^2;

h) Racking force = 5.88 kN/m. Design the top chord members

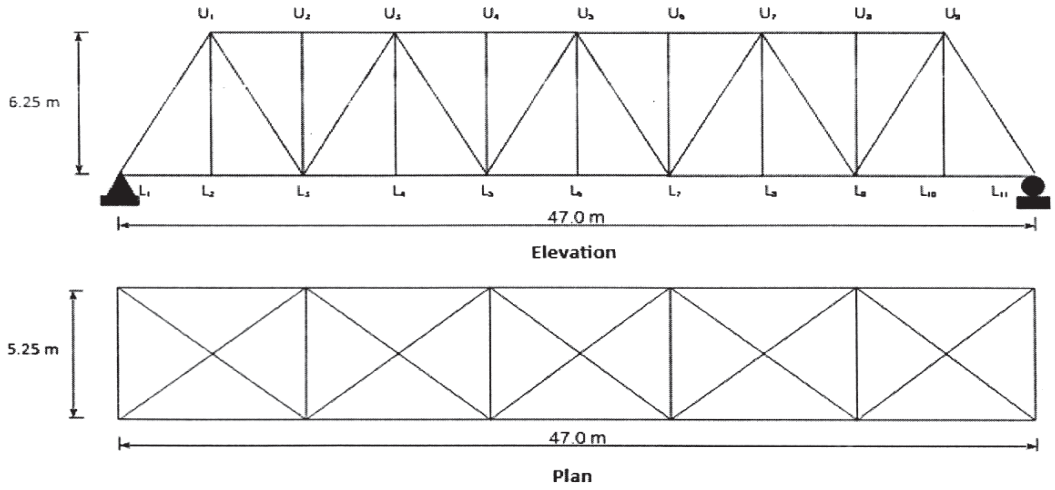

Fig. 2

OR

Q6) For the problem given in Q.6, design the bottom chord member. **[18]**

Q7) Design a steel rocker bearing for the following data. **[17]**

a) Load from the truss girder = 3850 kN;
b) Allowable pressure on bearing block=2.10 Mpa;
c) Permissible bending stress= 150 Mpa;
d) Permissible bearing stress = 65 Mpa;
e) Allowable shear stress = 38 Mpa.

OR

Q8) Design an elastomeric bearing for a railway bridge with the given data. **[17]**

a) Dead load reaction from the girder = 3855 kN;
b) Live load reaction= 1100 kN;
c) Longitudinal frictional force = 98 kN;
d) Grade of concrete used for bed block = M-50 Any additional data required may be suitable considered.



Total No. of Questions : 8]

SEAT No. :

PB2233

[Total No. of Pages : 3

[6263]-71
B.E.(civil)
IRRIGATION AND DRAINAGE
(2019 Pattern) (Semester-VIII) (401013 C)(Elective -V)

Time : 2½ Hours] *[Max. Marks : 70*

Instructions to the candidates:

1) ***Answer Q.1 or Q.2, Q.3 or Q.4, Q.5 or Q.6, Q.7 or Q.8.***
2) ***Answers to the all questions should be written in single answer-book.***
3) ***Neat diagrams must be drawn wherever necessary.***
4) ***Figures to the right indicate full marks.***
5) ***Assume Suitable data if necessary.***

Q1) a) Explain why priming is essential in centrifugal pump. **[6]**

b) Discuss two empirical equations used to estimate head loss in drip irrigation. **[6]**

c) What is the general information required for the design of drip irrigation system? **[6]**

OR

Q2) a) What is the NPSH of centrifugal pump? Distinguish between available NPSH and required NPSH. **[6]**

b) Define following terms related to centrifugal pump: **[6]**

i) Static head, ii) Manometric head,

iii) Delivery head, iv) Gross head,

v) Suction head, vi) Manometric efficiency,

c) Discuss the design procedure for lateral line of drip irrigation system for uniform slope. **[6]**

Q3) a) As per hydraulic design of sprinkler system, explain how to compute: **[8]**

i) Discharge of sprinkler nozzle,

ii) Water spread area of sprinkler,

iii) Break-up of jet,

iv) Water application rate.

P.T.O.

b) A farm of 25 ha is planned to be brought under sprinkler irrigation. The textural class of the soil is loam-to-silt loam, having moisture content at field capacity (FC) and permanent wilting point (WP) of about 42% (by volume), and 26% (by volume), respectively. An infiltration test data showed that the constant (basic) infiltration rate is 2mm/h. A relatively impervious layer exists at a depth of 2.0m below the soil surface.The long-term average reference evapotranspiration (ET_0) rate in that area is 4.5 mm/d. Vegetable crops are planned to grow in the farm, and the crop coefficient (K_c) at the miximum vegetative period is 1.1. Determine: **[9]**

i) Maximum evapotranspiration (ET_{max}),

ii) Daily water requirement for the area (assume application efficiency Ea = 80%),

iii) Discharge rate (assume daily irrigation period = 4 hrs),

iv) Discharge rate of individual sprinkler.

OR

Q4) a) Draw a labelled sketch showing components of a sprinkler irrigation system. What are advantages and disadvantages of sprinkler irrigation system. **[5]**

b) Explain following types of sprinkler systems: **[6]**

i) Rotating head system

ii) Perforated pipe system

c) Determine the system capacity for a sprinkler irrigation system to irrigate 30 ha of maize crop. Design moisture use rate is 5 mm per day. Moisture replaced in soil at each irrigation is 7 cm. Irrigation efficiency is 75%. Irrigation period is 11 days in 14 day interval. The system is to be operated for 20 hours per day. **[6]**

Q5) a) Explain in brief-salinity stress coefficient. **[6]**

b) What is sodicity? Explain how to calculate SAR? **[5]**

c) Determine the depth of irrigation water which would change 25 cm depth of loam soil into saline soil condition, if the electrical conductivity of irrigation water is 1.5 millimhos/cm. The bulk density of the soil is 1.21 gm/cc and the density of water is 1gm/cc. The saturation percentage of the soil is 40. **[6]**

OR

Q6) a) A quantity of 100 ml of gypsum solution, having 25 meq/l concentration as calcium, on reacting with 6.9 gm of an alkali soil showed 32 meq/l of Ca+Mg concentration in the filtrate. Estimate the gypsum requirement in meq/100 gm soil. **[6]**

b) Explain influence of salts on the physical properties of soil. **[5]**

c) What is leaching fraction? Explain how to compute leaching fraction. **[6]**

Q7) a) What are the different steps involved in the drainage design? **[5]**

b) What is land forming in surface drainage? **[5]**

c) Surface drainage should be planned for a new agricultural farm to drain out irrigation tail- water and seasonal rainfall runoff. The maximum rainfall intensity at the site in 35 years record is 41 mm/h. The tertiary drain would have to carry runoff from 4.3 ha land. The secondary drain would have to carry thrice of tertiary, and the main drain to carry discharge of five secondary drains (of similar flow). Determine the design discharge capacity of the (a) tertiary, (b) secondary, and (c) main drain. **[8]**

OR

Q8) a) Enlist different structures in pipe drain system. **[4]**

b) Explain in brief: **[6]**

i) Clay tile pipe,

ii) Concrete pope,

iii) Plastic pipe used for subsurface drainage system.

c) Determine the required drain spacing (L) for the basic design criteria q = 9mm/d, H = 0.65 m, pipe with outer diameter = 0.25 m and wet entry perimeter (u) = 0.35 m. K_1 = 2.0m/day, K_2 =1.0 m/day, W =1m, D = 3m. Refer Fig.8 (c). Use Hooghoudt's formula. Take only two trials. **[8]**

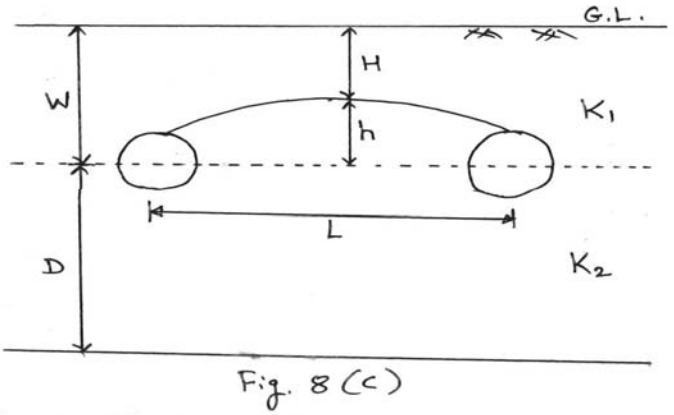

Fig. 8 (c)

Total No. of Questions: 8]

SEAT No. : ____

PB2234

[Total No. of Pages :2

[6263]-72
B.E. (Civil)
DESIGN OF PRECAST AND COMPOSITE STRUCTURES
(2019 Pattern) (Semester-VIII) (Elective-V) (401013D)

Time : 2½ Hours] ***[Max. Marks : 70***

Instructions to the candidates:

1) ***Answer Q.1 or Q.2, Q.3 or Q.4, Q5 or Q6, Q7 or Q8.***
2) ***Figures to the right indicate full marks.***
3) ***IS 15916, IS 11384, IS 800 ans IS 3935 are allowed in the examination.***
4) ***The designs should comply with the latest codal provisions.***
5) ***If necessary, assume suitable data and indicate clearly.***
6) ***Use of electronic pocket calculator is allowed.***

Q1) Design a simple rectangular precast concrete beam to span a distance of 5meters. The beam is subjected to a uniformly distributed load of 15kN/m and a concentrated load of 30 kN at mid-span Use M30 grade concrete and assume the cover to reinforcement as 25 mm. The width of the beam is 300 mm. Perform all necessary calculations and provide the final design. **[18]**

OR

Q2) Design a precast hollow-core slab to be used in a residenial building. The slab is required to span a distance of 6 meters and support a uniformly distributed load of 5kN/m^2. The live load is estimated to be 2kN/m^2. The hollow-core slab will be made of high-strength concrete (fck=35N/mm^2) and will have a total depth (h) of 200 mm, with a clear span (L) of 6 meters. The slab will have a width (b) of 1200mm. **[18]**

Q3) Using the Indian code IS 800: 2007, calculate the maximum allowable load that a simply supported composite beam, consisting of an ISMB 400 steel beam and an M30 grade concrete slab, can support. Given:

Dimensions of the steel beam: Depth (D)=250 mm, Flange Width (b) = 75 mm, and Web Thickness (t)=8 mm. Slab thickness (h)=100mm, Width (b)=1200 mm, and Concrete Grade (fck)=30N/mm^2. **[18]**

OR

P.T.O.

Q4) Compare the deflection of a steel-concrete composite beam (as described above) to that of a monolithic ISMB 400 steel beam. Use IS 456:2000 for concrete and IS 800:2007 for steel. Determine which design offers superior performance in terms of deflection under a uniformly distributed load of 12kN/m. **[18]**

Q5) According to IS 456:2000 and IS 13920: 2016, calculate the required number and spacing of welded stud shear connectors for a composite structure consisting of a 150 mm thick M20 grade concrete slab and an ISMB 300 steel beam. The applied load is a live load of 20 kN/m. **[17]**

OR

Q6) Given the dimensions and material properties of the shear connectors (e.g., diameter, height, and shear strength), analyze and calculate the maximum shear load that the shear connection between the concrete slab and steel beam can withstand without failure. Compare this value with the applied load to ensure the design complies with IS codes. **[17]**

Q7) Design a steel-concrete composite column according to IS 456:2000 and IS 800: 2007 to support an axial load of 600kN and a moment of 80kNm. Use an ISMB 350 steel section and M30 grade concrete. Calculate the required dimensions and reinforcement for the column. **[17]**

OR

Q8) Assess the design of an encased composite column based on IS 11384: 2006, considering its capacity to withstand both axial loads and moments. Calculate the moment-curvature response of the column and ensure it complies with the India code. Discuss the implications for structural safety and potential design improvements. **[17]**



Total No. of Questions: 8]

SEAT No. : ____

PB2235

[Total No. of Pages :3

[6263]-73
B.E.(Civil)
HYDROPOWER ENGINEERING
(2019 Pattern) (Semester-VIII) (Elective-V) (401013-E)

Time : 2½ Hours] ***[Max. Marks : 70***

Instructions to the candidates:

1) ***Attempt Q1 or Q2, Q3 or Q4, Q5 or Q6, Q7 or Q8.***
2) ***Figures to the right side indicate full marks.***
3) ***Neat diagrams must be drawn wherever necessary.***
4) ***Assume Suitable data if necessary.***
5) ***Use of logarithmic tables, slide rule, Mollier charts, electronic pocket calculator (non-programmable) and steam tables is allowed.***

Q1) a) Explain with neat sketch load curve **[5]**

b) Define **[6]**

i) Connected load,

ii) Diversity factor

iii) Maximum demand

c) A pelton wheel of 3m runner works under a head of 800m.It runs at 60r.p.m. The discharge rate into the runner is $3m^3/s$ Find **[6]**

i) Input power to runner

ii) Shaft power from runner having mechanial efficiency of 92%

iii) Net power output if generator is 96% efficient

iv) Specific speed of turbine

v) Number of turbine needed to generate 100MW

OR

Q2) a) A diesel power Plant consists of two units of 500KW capacities and one unit of 200KW. The fuel used has calorific value of 4,0000 Kj/kg and fuel consumption is 0.25kg/kwh. Determine quantity of fuel required for a month of 30 days and its cost if cost is rs. 4000/ton. Take capacity factor of plant as 50% and also find overall efficiency of plant. **[6]**

b) Advantages and disadvantages of Hydro Power Plants over other Power Plants. **[6]**

c) Explain method of fixing installed capacity of hydroelectric power plant.**[5]**

P.T.O.

Q3) a) Sketch the details of typical power house and show all components. State functions of all components. **[7]**

b) State advantages and disadvantages of underground power house. **[4]**

c) What are the types of underground power stations? Explain any one type with neat sketch. **[6]**

OR

Q4) a) What are the safety requirements of power house? **[5]**

b) What is instrumentation in power house? How instrumentation and control is achieved in case of powerhouse? **[6]**

c) Explain different methods of air cooling of generators. **[6]**

Q5) a) Write short notes on **[6]**

i) Governing of Turbines

ii) Water hammer in turbines

b) A pelton wheel works under a head of 300m and the total discharge available through the jets is $5m^3/s$. Turbine uses two runners and two jets of equal diameter per runner. The coefficient of velocity of each jet is 0.98. Hydraulic efficiency of each runner is 92%. Find the diameter of each jet power developed of each jet and power by turbine. **[6]**

c) Differentiate between Impulse turbine and Reaction turbine. **[6]**

OR

Q6) a) What is draft tube? What are the functions of draft tube? Explain different types with figures and draft tube theory? **[6]**

b) What is Cavitation Explain effects of cavitation **[6]**

c) A turbine is to operate under 30m head at 250rpm. The discharge is $9m^3/s$. If the efficiency of the turbine is 85% Determine. **[6]**

i) power generated

ii) specific Speed

iii) type of turbine

iv) output under head of 25m

Q7) a) Explain the concept of carbon credit? Give its significance. **[6]**

b) What are the factors governing the pricing of electricity. **[6]**

c) What are the fixed and running charges in economic analysis of a hydropower plant. **[6]**

OR

Q8) a) What are the provisions related to safety and electricity supply as per electricity act 2003? **[6]**

b) What are the duties of electricity generation companies? **[6]**

c) Explain types of tariffs for hydropower plants. **[6]**



Total No. of Questions: 8]

SEAT No. : ____

PB2236

[Total No. of Pages :2

[6263]-74
B.E.(Civil)
STRUCTURAL AUDIT AND RETROFITTING OF STRUCTURES
(2019 Pattern) (Semester-VIII) (Elective-V) (401013 f)

Time : 2½ Hours] ***[Max. Marks : 70***

Instructions to the candidates:

1) ***Attempt Q1 or Q2, Q3 or Q4, Q5 or Q6, Q7 or Q8.***
2) ***Neat diagrams must be drawn wherever necessary.***
3) ***Figures to the right indicate full marks.***
4) ***Assume suitable data if necessary.***
5) ***Use of electronic pocket calculator allowed.***
6) ***Use of cell phone is prohibited in the examination hall.***

Q1) a) Explain in details the differences between short-term and long-term monitoring in structural health monitoring. **[9]**

b) Explain I details the process of data acquisition in structural health monitoring. **[9]**

OR

Q2) a) Explain in brief role of artificial intelligence in structural health monitoring with suitable example. **[9]**

b) State and explain the concept of global structural health monitoring techniques. **[9]**

Q3) a) Explain the concept of mass reduction technique in retrofitting? How does this technique contribute to enhancing the seismic performance of structures? **[8]**

b) Explain role of jacketing in retrofitting of structures with a suitable example. **[9]**

OR

P.T.O.

Q4) a) Discuss the technique of inserting new members contribute to retrofitting. What are the situations where this technique is suitable and effective? **[8]**

b) Explain in brief key considerations and challenges involved in retrofitting historical structures. **[9]**

Q5) a) What is Fiber Reinforced Polymer (FRP) and how does it enhance the structural performance of reinforced concrete elements? **[9]**

b) How is FRP retrofitting carried out using FRP plates? What are the steps involved and how does the application of FRP plates improve the structural behavior of elements? **[9]**

OR

Q6) a) Explain in brief FRP bars application in retrofitting of structures. Also state the advantages of FRP bars over traditional steel reinforcement. **[9]**

b) Explain in details the key considerations and limitations associated with the use of FRP in retrofitting. **[9]**

Q7) a) Describe the steps involved in the analysis and desing of an RC beam using FRP for flexural strengthening. **[8]**

b) Describe the use of FRP contribute to increasing the flexural strength and ductility of RC beams. **[9]**

OR

Q8) a) Explain the application of FRP for shear strengthening of RC beams to improve their structural performance. **[8]**

b) State and explain the provisions outlined in ACI 440 related to the retrofitting of RC beams using FRP for flexural and shear strengthening. **[9]**



Total No. of Questions : 8]

SEAT No. :

PB-2237

[Total No. of Pages : 2

[6263]-75

B.E. (Civil)

TQM & MIS IN ENGINEERING

(2019 Pattern) (Semester - VIII) (401014A) (Elective-VI)

Time : 2½ Hours] *[Max. Marks : 70*

Instructions to the candidates:

1) ***Answer Q.1 or Q.2, Q.3 or Q.4, Q.5 or Q.6 and Q.7 or Q.8.***
2) ***Figures to the right indicates full marks.***
3) ***Neat diagrams must be drawn wherever necessary.***
4) ***Assume Suitable data if necessary***

Q1) a) Appraise the importance of ISO Process in construction Sector with example. **[9]**

b) Develop a checklist for formwork checking. **[8]**

OR

Q2) a) Justify the importance of quality manual in construction projects. Explain the documentation process. **[8]**

b) Develop a checklist for concreting activity. **[9]**

Q3) a) Why benchmarking is essential in organization. Explain the benchmarking process. **[8]**

b) Justify the need of quality circle in construction projects. **[9]**

OR

Q4) a) Explain in detail various categories of cost of quality. **[8]**

b) Explain in detail CONQAS, CIDC-CQRA certifications. **[9]**

P.T.O.

Q5) a) How will you apply 5S techniques in construction projects. **[9]**

b) Explain in detail Failure mode effect analysis. **[9]**

OR

Q6) a) Explain in detail KAIZEN concept. How it can be applied in civil engineering organization. **[9]**

b) Explain the Rajeev Gandhi Award & Jamunalal Bajaj Award. **[9]**

Q7) a) Justify the need and importance of MIS in construction sector. **[9]**

b) Explain in detail characteristics of information. **[9]**

OR

Q8) a) Explain in detail operation support system and Transaction process system. **[9]**

b) Explain in detail Executive support system & Executive information system. **[9]**

⌘⌘⌘

Total No. of Questions : 8]

SEAT No. :

[Total No. of Pages : 2

PB-2238

[6263]-76
B.E.(Civil)
ADVANCED TRANSPORTATION ENGINEERING
(2019 Pattern) (Semester - VIII) (401014B) (Elective - VI)

Time : 2½ Hours] *[Max. Marks : 70*

Instructions to the candidates:

1) ***Answer Q1 or Q2, Q3 or Q4, Q5 or Q6, Q7 or Q8.***
2) ***Figures to the right side indicate full marks.***
3) ***Use of logarithmic tables, slide rule, Mollies charts, electronics pocket calculator and steam tables is allowed.***
4) ***Assume suitable data if necessary.***
5) ***Neat diagrams must be drawn wherever necessary.***

Q1) a) Explain the role of mobility and non motorized transport (NMT) in sustainable development. **[6]**

b) Write a short note on Pedestrian actuated signals. **[6]**

c) Explain the principles pedestrian facility design as per IRC 11-2015. **[6]**

OR

Q2) a) Discuss the benefits of Non-Motorized Transportation NMT System. **[6]**

b) How can NMT help in Urban transport planning? **[6]**

c) What is active transport in NMT? Explain its Types. **[6]**

Q3) a) Write a short on Greenshield's model. **[5]**

b) Explain the concept of level of service. **[6]**

c) The average normal flow of traffic on cross roads A and B during design period are 400 and 250 PCU per hour; the saturation flow values on these roads are estimated as 1250 and 1000 PCU per hour respectively. The all-red time require for pedestrian crossing is 12 sec. Design two phase traffic signal with pedestrian crossing by Webster's Method. **[6]**

OR

Q4) a) Explain the terms basic capacity, possible capacity and practical capacity. **[5]**

b) Discuss briefly the various factors affecting the practical capacity of roads. **[6]**

c) Write a short note on On-street and Off- street parking. **[6]**

P.T.O

Q5) a) What are the advantages and limitations of flexible pavement. **[6]**

b) Explain the overview of design of flexible pavement as per IRC 37-2018. **[6]**

c) Determine the Equivalent Wheel Load Factor or VDF value of the following two axle loads in terms of the standard axle load of 8.16 t. **[6]**

i) LCV with rear axle load of 1.8 t

ii) HCV with rear axle load of 16.0 t

OR

Q6) a) Determine the total thickness of flexible pavement assuming single layer elastic theory using following data: **[6]**

Design wheel load = 4200kg

Tyre Pressure = 6.0 kg/cm^2

Elastic Modulus = 150 kg/cm^2

Permissible Deflection = 0.25

b) Explain pavement unevenness, skid resistance & its measurements as per IRC guidelines. **[6]**

c) What are the different types of pavement maintenance as per 1RC: 82? Also state the importance of pavement maintenance. **[6]**

Q7) a) Calculate the wheel load stresses at interior and corner regions of a concrete pavement using Westergaard's equations on the basis of following data: **[10]**

Wheel Load = 4100 kg

Modulus of Elasticity of concrete = 3.0×10^5 kg/cm^2

Pavement thickness= 15 cm

Poisson's ratio = 0.15

Modulus of subgrade reaction = 3.0 kg / cm^2

Radius of contact area = 15 cm

b) State the various types of joints in concrete pavements. Explain any one in detail. **[7]**

OR

Q8) a) What are the different types of overlays that may be considered for strengthening existing flexible pavements? Mention their relative advantages. **[10]**

b) Explain with neat sketches the various distresses in rigid pavements. **[7]**



Total No. of Questions : 8]

SEAT No. :

PB-2239

[Total No. of Pages : 2

[6263]-77

B.E. (Civil)

GEO-SYNTHETIC ENGINEERING

(2019 Pattern) (Semester - VIII) (401014C) (Elective-VI)

Time : 2½ Hours] *[Max. Marks : 70*

Instructions to the candidates:

1) ***Answer Q.1 or Q.2, Q.3 or Q.4, Q.5 or Q.6, Q.7 or Q.8.***
2) ***Neat diagrams must be drawn whenever necessary.***
3) ***Figures to the right indicate full marks.***
4) ***Assume suitable data, if necessary and mention it clearly.***
5) ***Use of non-programmable calculator is allowed.***

Q1) a) What are the functions of Geo-synthetic Material? **[9]**

b) How geo-grids help to control soil erosion? **[9]**

OR

Q2) a) Write a note on Geo-synthetics in filtration. **[9]**

b) Describe the applications of Geo-synthetics in geo environment. **[9]**

Q3) a) Discuss the role of Geo-synthetics in roads and pavements. **[8]**

b) Explain in detail the role of Geo-synthetics in airfield pavement design. **[9]**

OR

Q4) a) Write a note on mechanism and concept of pavement. **[8]**

b) What are the benefits of using the geotextile layer or layers in the construction of unpaved roads? **[9]**

Q5) a) Describe the basic components of a Geo-synthetic reinforced retaining wall. **[8]**

b) Write a note on : **[9]**

i) Gabion wall

ii) Geo-cell wall

P.T.O.

OR

Q6) a) State and explain various facing elements in reinforced earth wall. Which one is most economical? **[8]**

b) Explain in detail construction procedure of soil reinforcement. **[9]**

Q7) a) Describe the term prefabricated vertical drain in ground improvement with neat sketch. **[6]**

b) Discuss the mechanism of geo-cell reinforced sand overlying soft clay. **[6]**

c) Write a note on consolidation technique in ground improvement. **[6]**

OR

Q8) a) Write a note on ground instrumentation and monitoring in ground improvement. **[6]**

b) Describe as how the bearing capacity of soil below a footing can be increased by using Geo-grids. **[6]**

c) Explain the role of geo-synthetic material in soil stabilization. **[6]**

⌘⌘⌘

Total No. of Questions : 8]

SEAT No. :

[Total No. of Pages : 2

PB-2240

[6263]-78
B.E.(Civil)
STRUCTURAL DESIGN OF FOUNDATIONS
(2019 Pattern) (Semester - VIII) (401014D) (Elective - VI)

Time : 2½ Hours] *[Max. Marks : 70*

Instructions to the candidates:

1) ***Answer Q1 or Q2, Q3 or Q4, Q5 or Q6, Q7 or Q8.***
2) ***Neat diagrams must be drawn wherever necessary.***
3) ***Figures to the right indicate full marks.***
4) ***Use of electronic pocket calculator is allowed.***

Q1) a) Describe various types of pile foundations. **[5]**

b) Discuss different methods for the installations of piles. **[6]**

c) A circular pile with 0.35m diameter and 10m length penetrates a deposit of clay having cohesion 5 kN/m^2 and mobilizing factor of 0.8. Calculate the ultimate frictional resistance of the pile. **[6]**

OR

Q2) a) Discuss static pile load test. **[5]**

b) Write a note on the classification of pile foundation. **[6]**

c) A square concrete pile (30 cm side) 10 m long is driven into coarse sand (Unit weight = 18.5 kN/m^2, N = 20). Determine the allowable load (Factor of Safety 3.0). **[6]**

Q3) a) Explain the Sinking of Wall. **[5]**

b) What are the conditions in which a drilled pier is more suitable than a caisson? **[6]**

c) Describe the components of the Well foundation with a neat sketch. **[6]**

OR

Q4) a) Explain the procedure for the design of the Well foundation by the IRC method. **[5]**

b) Write a note on the Pneumatic Caisson Foundation with a neat sketch. **[6]**

c) How to estimate the load-carrying capacity of an open caisson? **[6]**

P.T.O

Q5) a) Explain Types of Machine Foundations with a neat sketch. **[6]**

b) Explain the following terms: **[6]**

i) Natural frequency

ii) Period

iii) Resonance

iv) Magnification.

c) State the criteria for the design of the foundation for the Reciprocating type of machine (IS 2974 Part I: 1960). **[6]**

OR

Q6) a) Explain the bulb of pressure concept. **[6]**

b) A foundation block of weight 30kN rests on soil for which the stiffness may be assumed as 25000 kN/m. The machine is vibrated vertically by an exciting force of 3.0 sin (30 t) kN. Find the natural frequency, natural period, natural circular frequency, and amplitude of vertical displacement. The damping factor is 0.50. **[6]**

c) State the criteria for the design of the foundation for the Impact type of machine (IS 2974 Part II: 1966) **[6]**

Q7) a) Explain the types of Retaining Walls and their principles and modes of failure. **[9]**

b) Design a cantilever retaining wall for the following data: **[9]**

The total height of the wall is 5.5 m, the depth of the foundation is 1.8m, the density of soil is 19 $kN.m^3$, the angle of internal friction is 30°, the SBC of soil 285 kN/m^2, the coefficient of friction between base & soil is 0.5, level backfill. Assume M20 & Fe415 material, check the stability of the retaining wall.

OR

Q8) a) Explain the design procedure of the earth retaining wall and its assumptions. **[9]**

b) Write a note on Flexible and rigid earth-retaining structures with a neat sketch. **[9]**



Total No. of Questions : 8]

SEAT No. :

PB-2241

[Total No. of Pages : 2

[6263]-79
B.E.(Civil)
GREEN STRUCTURES AND SMART CITIES
(2019 Pattern) (Semester - VIII) (401014E) (Elective - VI)

Time : 2½ Hours] *[Max. Marks : 70*

Instructions to the candidates:

1) ***Answer Q1 or Q2, Q3 or Q4, Q5 or Q6, Q7 or Q8.***
2) ***Figures to the right indicate full marks.***
3) ***Your answers will be values as a whole.***
4) ***Assume suitable data, if necessary.***
5) ***Use of electronic pocket calculator and steam table is allowed.***

Q1) **Answer the followings :**

a) What are the advantages of using BIPV technology in building design? **[5]**

b) How does ECBC-2017 help in reducing energy consumption and greenhouse gas emissions in buildings? **[6]**

c) What role can technology and innovation play in improving the OTTV of buildings? **[6]**

OR

Q2) **Answer the followings :**

a) What is the Overall Thermal Transfer Value (OTTV) and why is it important in building design and construction? **[6]**

b) What are the challenges faced by builders and developers in implementing ECBC-2017? **[5]**

c) What are some of the potential risks associated with poorly designed or malfunctioning comfort systems in buildings? **[6]**

Q3) **Answer the followings :**

a) How can smart cities contribute to sustainable development and the achievement of the Sustainable Development Goals? **[6]**

b) Wht are the key dimensions of a smart city, and how do they contribute to its functionality? **[5]**

c) What are the key differences between conventional cities and smart cities, in terms of their components and infrastructure? **[6]**

OR

P.T.O

Q4) **Answer the followings :**

a) How can energy demand be reduced, and what are some of the strategies and technologies that can be used to achieve this goal? **[6]**

b) What is a green approach to meeting energy demand, and what are some of the key components of this approach? **[5]**

c) How do smart city components improve the quality of life for residents, and what are some of the benefits of these improvements? **[6]**

Q5) **Answer the followings :**

a) Write a note on: **[12]**

i) PV application

ii) Solar thermal energy

iii) Singular solar cells

iv) Hybrid solar cells

b) What are the potential drawbacks of upgrading conventional cities to smart cities? **[5]**

OR

Q6) **Answer the followings :**

a) Write a note on: **[12]**

i) India's "100 smart cities" policy and mission

ii) Smart city planning and development

b) How has the "100" smart cities initiative contributed to the overall urban planning and management in India? **[5]**

Q7) **Answer the followings :**

a) Discuss, what is the Swachh Bharat mission and how does it aim to improve cleanliness and sanitation in India? **[7]**

b) Discuss, how does the implementation of SDG 11 promote sustainable urbanization and human well-being? **[7]**

c) Discuss, what is artificial intelligence (AI) and how is it being used in smart city development? **[5]**

OR

Q8) **Answer the followings :**

a) Discuss the benefits of using AI in smart city projects and how it can improve the quality of life for citizens. **[7]**

b) Explain the role of government, private sector, and civil society in achieving the SDGs. **[7]**

c) What are the Sustainable Development Goals (SDGs) and why were they created? **[5]**



Total No. of Questions : 8]

SEAT No. :

PB-2242

[Total No. of Pages : 3

[6263]-80
B.E.(Civil)
RURAL WATER SUPPLY AND SANITATION
(Elective - VI) (2019 Pattern) (Semester - VIII) (401014F)

Time : 2½ Hours] *[Max. Marks : 70*

Instructions to the candidates:

1) ***Answer Q1 or Q2, Q3 or Q4, Q5 or Q6, Q7 or Q8.***
2) ***Figures to the right side indicates full marks.***
3) ***Draw neat figures wherever necessary.***
4) ***Assume suitable data if necessary.***
5) ***Use of scientific calculator is allowed.***

Q1) **Attempt the following questions :**

a) Discuss the principles and functioning of a community-managed piped water supply scheme in rural areas. What are the key steps involved in establishing and sustaining such a scheme? **[6]**

b) What are the essential components of a typical water supply scheme? Describe the roles and functions of each component, such as intake structures, treatment plants, storage facilities and distribution networks. **[5]**

c) Describe the design and operation of an intake Jack well (pump house). What are its key components, and how does it function to extract water from underground sources? Discuss the advantages and limitations of using a Jack well as an intake structure. **[6]**

OR

Q2) **Attempt the following questions :**

a) Can you discuss the role of government policies and initiatives in promoting sustainable and accessible water supply in rural areas? **[6]**

b) How can cost-benefit analysis and financial models help in decision-making and securing funding for retrofitting projects? **[5]**

c) How does the location, type, and size of the intake structure impact the efficiency and reliability of the water supply system? **[6]**

P.T.O

Q3) **Attempt the following questions :**

a) What is hydraulic testing and why is it conducted on pipelines? **[5]**

b) What are the key criteria for determining the location and spacing of surge tanks and air valves in a rising main system? **[6]**

c) Discuss the challenges and potential issues that can arise during hydraulic testing of pipelines and how they can be addressed. **[6]**

OR

Q4) **Attempt the following questions :**

a) How can interdisciplinary collaboration enhance community participation and empowerment in rural water supply initiatives? **[6]**

b) How do factors such as pump size, materials of construction, and operational costs play a role in the selection of the most suitable pump for a specific application. **[5]**

c) Explain the concept of frictional head loss in a piping system and how it affects the Hydraulic Grade Line (HGL). **[6]**

Q5) **Attempt the following questions :**

a) Explain in detail what do you understand by GIS? Give the applications of GIS in water supply engineering. **[6]**

b) Discuss the potential future applications and advancements in pH sensor technology for water quality monitoring. **[6]**

c) How can emerging trends like sensor networks, online monitoring, or real-time data analytics contribute to enhanced pH monitoring? **[6]**

OR

Q6) **Attempt the following questions :**

a) Explore the importance of level sensors in water storage facilities. **[6]**

b) Write a note on use of instrumentation and robotics in water supply systems. **[6]**

c) Discuss the following

i) SCADA (Supervisory Control and Data Acquisition) **[3]**

ii) Trend analysis **[3]**

Q7) **Attempt the following questions :**

a) "Training of villagers on operation and maintenance issues is crucial for ensuring the sustainability and effectiveness of water supply systems" Justify the statement in brief. **[9]**

b) Explain the leakage detection techniques and measures adopted to prevent leakage in water supply systems. **[9]**

OR

Q8) **Attempt the following questions :**

a) Explain the process of periodical maintenance of electrical components used in water supply systems along with necessary documentation required. **[9]**

b) Give a brief overview of record drawings in relation to rural water supply systems. **[9]**



Total No. of Questions : 8]

SEAT No. : ____

PB2243

[Total No. of Pages :3

[6263]-81

B.E. (Computer Engineering)

DESIGN AND ANALYSIS OF ALGORITHMS

(2019 Pattern) (Semester- VII) (410241)

Time : 2½ Hours] ***[Max. Marks : 70***

Instructions to the candidates:

1) ***Attempt Q.1 or Q.2, Q.3 or Q.4, Q.5 or Q.6, Q.7 or Q.8.***
2) ***Neat diagrams must be drawn wherever necessary.***
3) ***Assume suitable data if necessary.***
4) ***Figures to the right indicate maximum marks.***

Q1) a) Write a control abstraction for greedy method. Comment on the time complexity of this abstraction? **[6]**

b) Find an optimal solution for the following knapsack instance using greedy method. Number of objects n = 5. Capacity of knapsack m = 100. **[8]**

Objects	Weight	Profit
01	20	10
02	30	20
03	66	30
04	40	40
05	60	50

c) Comment on the statement "Problem which does not satisfy the principle of optimality cannot be solved by dynamic programming". **[4]**

OR

Q2) a) Write a control abstraction for dynamic programming strategy. Comment on the time complexity of this abstraction? **[8]**

b) Consider 4 matrices A1, A2, A3 and A4. The orders of these matrices are given below: **[10]**

Matrix	Order
A1	3×5
A2	5×4
A3	4×2
A4	2×4

Find the optimal sequence of chain matrix multiplication of these matrices using dynamic programming approach. Clearly give the final sequence and total number of multiplications involved.

P.T.O.

Q3) a) Assume that a graph with n vertices is represented by an adjacency matrix G. Let there be "m" number of colours available. Write a recursive backtracking algorithm to colour all the vertices of the graph. What is the time complexity of this algorithm? **[8]**

b) Consider three items along with respective weights and value as **[9]**

	Weight	Value	Value/Weight
O1	5	6	6/5 = 1.2
O2	4	5	5/4 = 1.25
O3	3	4	4/3 = 1.3

Assume the Knapsack capacity m = 7. Solve this 0/1 Knapsack problem using LC branch and bound method.

OR

Q4) a) Compare backtracking with branch and bound method with respect to: search technique, exploration of state space tree and king of problems that can be solved. **[8]**

b) Consider set A of five numbers {5,10,15,20.25}. We wish to find the subset of A such that sum of the numbers in this subject is equal to 30. Solve this problem to find the first solution using backtracking approach. Show space tree being created. **[9]**

Q5) a) What are randomized algorithms? Enlist and explain in brief the primary reasons for using randomized algorithms. **[8]**

b) What are approximation algorithms? Based on the approximation ratio, classify the approximation algorithms. **[9]**

OR

Q6) a) Explain the methods of amortized analysis. Give suitable example. **[8]**

b) Suppose you are working on an embedded system for a medical device that monitors patient vital signs. The device continuously collects data from various sensors and needs to process and display this information in real-time. The data includes timestamps, temperature readings, heart rate, and blood pressure measurements. Suggest suitable sorting algorithm for this scenario. Clearly justify your answer with respect to key factors. **[9]**

Q7) a) Write a Rabin-Karp string matching algorithm. Input to the algorithm be: Original text "t" of length n and pattern text being matched is "p" of length m. What is the expected runtime and worst-case runtime of this algorithm? **[10]**

b) Write multi-threaded merge sort algorithm. Briefly discuss how does it differ from conventional merge sort. **[8]**

OR

Q8) a) Consider the graph represented by an adjacency matrix: **[10]**

	A	B	C	D	E	F	G
A	0	1	1	0	0	0	0
B	1	0	0	1	1	0	0
C	1	0	0	0	0	1	1
D	0	1	0	0	0	0	0
E	0	1	0	0	0	0	0
F	0	0	1	0	0	0	0
G	0	0	1	0	0	0	0

Show stepwise process how the distributed breadth first search algorithm works on the above graph.

b) What do you understand by spawn and sync keywords used in multithreaded programming? Explain with the help of suitable example.

[8]



Total No. of Questions : 8]

SEAT No. :

PB-2244

[Total No. of Pages : 2

[6263]-82

B.E. (Computer Engineering)

MACHINE LEARNING

(2019 Pattern) (Semester - VII) (410242)

Time : 2½ Hours] *[Max. Marks : 70*

Instructions to the candidates :

1) ***Answer Q.1 or Q.2, Q.3 or Q.4, Q.5 or Q.6, Q.7 or Q.8.***
2) ***Figures to the right side indicate full marks.***
3) ***Draw neat diagram wherever necessary.***
4) ***Assume suitable data, if necessary.***

Q1) a) Define different regression models. **[6]**

b) What are different techniques to reduce under fitting? **[6]**

c) With following data of shows company expenditure. **[6]**

x(month)	1	2	3	4	5
y(expenditure)	12	19	29	37	45

using regression model predict expenditure of 6th month.

OR

Q2) a) What is R2 measure of evaluation? **[6]**

b) What do you mean by least square method? Explain least square method in the context of linear regression. **[6]**

c) Write a short note on stochastic qradient descent algorithms. **[6]**

Q3) a) Why ensemble learning is used for ML? **[5]**

b) What are advantages and disadvantages of K-NN? **[6]**

c) What are different distance metrics used in k-NN? **[6]**

OR

P.T.O.

Q4) a) What is multiclass classification? Explain the variants of multiclass classification. **[5]**

b) Explain kernel methods which are suitable for SVM. **[6]**

c) What are different techniques used for outlier handling? **[6]**

Q5) a) Why K-medoid is used? Explain k-medoid algorithm. **[5]**

b) Why density based clustering is used? Explain any one. **[6]**

c) What is outlier analysis? **[6]**

OR

Q6) a) What is isolation factor model? **[5]**

b) Explain k means algorithm. **[6]**

c) Explain Hierarchical clustering with example **[6]**

Q7) a) What is Multilayer perceptron? Describe with diagram. **[6]**

b) What are different activation function used is NN? **[6]**

c) Explain Convolution Neural Network. (CNN) with suitable example. **[6]**

OR

Q8) a) Explain building blocks of RBF networks. **[6]**

b) What is Personalized recommendation? What is content based recommendation? **[6]**

c) Explain Recurrent Neural Networks with as example. **[6]**

⌘⌘⌘

Total No. of Questions : 8]

SEAT No. :

PB2245

[Total No. of Pages : 2

[6263]-83

B.E. (Computer Engineering)

BLOCKCHAIN TECHNOLOGY

(2019 Pattern) (Semester - VII) (410243)

Time : 2½ Hours] ***[Max. Marks : 70***

Instructions to the candidates:

1) ***Solve questions Q.1 or Q.2, Q.3 or Q.4, Q.5 or Q.6, Q.7 or Q.8.***
2) ***Neat diagrams must be drawn wherever necessary.***
3) ***Figures to the right indicate full marks.***
4) ***Assume suitable data if necessary.***

Q1) a) Discuss following consensus algorithms used in blockchain technology. **[8]**

i) Proof of work

ii) Proof of activity

iii) Proof of Burn

iv) Proof of Stake

b) Explain in detail **[6]**

i) Bitcoin

ii) Ethereum

iii) Hyperledger

c) Explain the concept of Bitcoin in Blockchain Technology. **[4]**

OR

Q2) a) Discuss the difference between Bitcoin and Ethereum. **[4]**

b) Explain the difference between a permissioned and permissionless consensus approach. **[4]**

c) Explain the Byzantine General Problem in the context of blockchain consensus. **[4]**

d) Explain the role of IOTA in the context of the Internet of Things (loT). **[6]**

P.T.O.

Q3) a) What is Metamask, Illustrate in details. **[9]**

b) List and explain types of cryptocurrencies. **[8]**

OR

Q4) a) Compare and Contrast Coinbase and Binance. **[8]**

b) Differentiate between metmask and coinbase wallet. **[9]**

Q5) a) What is Ethereum? Explain in detail it differs from traditional cryptocurrencies. **[8]**

b) Identify two types of Ethereum networks and briefly explain the purpose of each. **[9]**

OR

Q6) a) Explain the concept of a smart contract with an example. **[8]**

b) How does Swarm contribute to decentralized storage in the Ethereum ecosystem? **[9]**

Q7) a) Describe the role of blockchain in financial sector. **[9]**

b) Describe the role of blockchain in Government. sector. **[9]**

OR

Q8) a) Explain role of blockchain in healthcare. **[9]**

b) Discuss potential challenges and benefits of implementing blockchain in Voting system. **[9]**



Total No. of Questions : 8]

SEAT No. :

PB2246

[Total No. of Pages : 2

[6263]-84
B.E. (Computer Engineering)
PERVASIVE COMPUTING
(2019 Pattern) (Semester - VII) (410244 (A)) (Elective - III)

Time : 2½ Hours] *[Max. Marks : 70*

Instructions to the candidates:

1) ***Answer Q.1 or Q.2, Q.3 or Q.4, Q.5 or Q.6, Q.7 or Q.8.***
2) ***Neat diagrams must be drawn wherever necessary.***
3) ***Figures to the right side indicate full marks.***

Q1) a) Which context is commonly assumed to be the most important when designing context-aware systems? Justify your answer. **[8]**

b) What are main challenges in Context-Awareness Computing? **[5]**

c) Explain how to determine the location in mobile networks. **[4]**

OR

Q2) a) What are Context aware systems? Explain types of Context. **[8]**

b) Explain different applications of context-aware system. **[5]**

c) What is Spatial Awareness? **[4]**

Q3) a) Draw and explain Environment Model-based Intelligent Systems Architectures. **[8]**

b) What are different elements of information system model? Explain them in details. **[5]**

c) State different Generic Intelligent Interaction Application. **[4]**

OR

Q4) a) Explain hybrid intelligent system based upon horizontal and vertical layering. **[8]**

b) Explain reactive type intelligent system model in detail. **[5]**

c) State advantages and disadvantages of cooperative systems in interaction multiplicity. **[4]**

Q5) a) State different advantages and disadvantages of HCI? **[6]**

b) Describe Wearable Computing Architecture. **[6]**

c) Define Interaction Design? Discuss the need w.r.t to pervasive environment. **[6]**

OR

P.T.O.

Q6) a) State different challenges in designing privacy protection for wearable devices? **[6]**

b) Explain difference between interaction design and UX design. **[6]**

c) Define HCI. Explain explicit and implicit HCI. **[6]**

Q7) a) Explain pervasive computing security challenges & its requirements. **[6]**

b) Explain secure resource discovery in detail. **[6]**

c) How can pervasive computing be useful in handling social digital divide? Explain. **[6]**

OR

Q8) a) Explain different open issues of security in pervasive computing. **[6]**

b) Write short note on Pervasive Computing Security Gaia Project. **[6]**

c) Which are different role of Ethics in pervasive computing security? **[6]**



Total No. of Questions : 8] **SEAT No. :**

PB2247 **[Total No. of Pages : 2**

[6263]-85
B.E. (Computer Engineering)
MULTIMEDIA TECHNIQUES
(2019 Pattern) (Semester - VII) (410244 B) (Elective - III)

Time : 2½ Hours] ***[Max. Marks : 70***

Instructions to the candidates:

1) ***Answer Q.1 or Q.2, Q.3 or Q.4, Q.5 or Q.6, Q.7 or Q.8.***
2) ***Neat diagrams must be drawn wherever necessary.***
3) ***Figures to the right side indicate full marks.***
4) ***Assume suitable data if necessary.***

Q1) a) What are the most significant differences between ordinary TV and HDTV? **[5]**

b) What is delta modulation? Explain uniform DM and adaptive DM in detail. **[6]**

c) Write a short note on: **[6]**

i) SNR

ii) SQNR

OR

Q2) a) Digital video uses chroma sub-sampling. What is the purpose of this? Why it is feasible? **[5]**

b) Explain with the help of diagram, DPCM encoder and decoder in detail. **[6]**

c) Explain in detail MIDI with respect to MIDI technology, MIDI structure of message. **[6]**

Q3) a) Explain quantization in detail. **[5]**

b) Compare lossy and lossless compression algorithms. **[6]**

c) Write a short note on image compression standards. **[6]**

i) JPEG

ii) JPEG2000

OR

Q4) a) What is compression 2 explain any 1 algorithm in detail. **[5]**

b) Explain JPEG principal modes. **[6]**

c) Write a short note on **[6]**

i) MPEG-4

ii) MPEG-7

P.T.O.

Q5) a) List the benefits and it's components of head mounted VR display, and output device of virtual reality. **[6]**

b) List and explain applications of Augmented reality and vitual reality with the example. **[6]**

c) What are the performance isssues with Augmented reality? Explain in detail. **[6]**

OR

Q6) a) Discuss AR, VR and MR in detail. **[6]**

b) What are the functional requirements needed for augmented reality ecosystem? **[6]**

c) Enlist the input devices used in immersive experience system. Explain any 1 device in detail. **[6]**

Q7) a) Explain AI based SDN architecture with layers. **[6]**

b) Explain road management system with the help of use case for accident detection and prevention system. **[6]**

c) Explain the use case and M-IoT in industrial applications for industrial meter reading inspection of manufacturing. **[6]**

OR

Q8) a) Explain M-IoT architecture in detail. **[6]**

b) Explain the use case of M-IoT in health monitoring application for diseases detection using smart phone, biomedical training of surgeons. **[6]**

c) Explain road management system with the help of use case for traffic signal monitoring, traffic estimation and congestion prevention. **[6]**

Total No. of Questions : 8]

SEAT No. :

PB2248

[Total No. of Pages : 2

[6263]-86

B.E. (Computer Engineering)

CYBER SECURITY AND DIGITAL FORENSICS

(2019 Pattern) (Semester - VII) (410244 C) (Elective - III)

Time : 2½ Hours] *[Max. Marks : 70*

Instructions to the candidates:

1) ***Answer Q.1 or Q.2, Q.3 or Q.4, Q.5 or Q.6, Q.7 or Q.8.***
2) ***Neat diagrams must be drawn wherever necessary.***
3) ***Figures to the right side indicate full marks.***
4) ***Assume suitable data if necessary.***

Q1) a) What are the typical services offered by computer forensics professionals? (explain any two) **[9]**

b) What specific technologies are utilized in the field of business computer forensics? (Describe any two) **[9]**

OR

Q2) a) How does computer forensics technology vary cross different sectors like miltary law enforcement & business? **[9]**

b) What are the key components of a data recovery solutions in computer forensics? Explain in detail. **[9]**

Q3) a) What are various options available for collecting digital evidences? Explain in detail? **[8]**

b) Explain the essential steps in processing digital evidence from the crime scene? **[9]**

OR

Q4) a) What is the volatile evidence in the context of computer forensics, and why is it important to collect in quickly? **[8]**

b) What are the hypical steps involve in the collection of digital evidence?**[9]**

Q5) a) What are some common data hiding techniques? Explain any one in detail? **[8]**

b) What is the honey net project, and how does it contribute to network forensics? **[9]**

OR

P.T.O.

Q6) a) What precautions should investigators take to prevent data alteration or loss during the seicure process? Explain any one in detail? **[8]**

b) What are the challenges and best practices associated with performing remove acqisitions? **[9]**

Q7) a) Whar are the common examples of email crime & violations that may necessitate investigation? Explain any one in detail? **[9]**

b) Explain any software tool using in computer forensics investigation and its respective purpose? **[9]**

OR

Q8) Write short note (any two) **[18]**

a) Computer forensics hardware tools

b) Validating & testing forensics software

c) e-mail investigation

◀▶ ◀▶ ◀▶

Total No. of Questions : 8]

SEAT No. :

PB2249

[Total No. of Pages : 2

[6263]-87

B.E. (Computer Engineering)

OBJECT ORIENTED MODELING & DESIGN

(2019 Pattern) (Semester - VII) (410244 D) (Elective - III)

Time : 2½ Hours] *[Max. Marks : 70*

Instructions to the candidates:

1) ***Answer Q.1 or Q.2, Q.3 or Q.4, Q.5 or Q.6, Q.7 or Q.8.***
2) ***Neat diagrams must be drawn whenever necessary.***
3) ***Figures to the right side indicate full marks.***
4) ***Assume suitable data if necessary.***

Q1) a) What is an Actor, a Use Case, Use case diagram, Explain various relationships in use case diagram with example. **[5]**

b) What is Sequence model? Explain with suitable example. **[5]**

c) Draw and explain use case diagram for ATM system. Explain at least two use case with the help of use case scenario. **[8]**

OR

Q2) a) Explain the relation of class model and state model. **[5]**

b) Design use case diagram for online reservation system. **[5]**

c) What do you mean by activity? Consider the ATM system scenario. Identify and explain at least three activities involved in the ATM system scenario. **[8]**

Q3) a) Write a short note on: Architecture style. **[5]**

b) What are the different categories of External Control? Explain in Detail. **[5]**

c) Explain **[7]**

i) Batch Transformation

ii) Continuous Transformation

OR

Q4) a) Explain Global resource handling. **[5]**

b) What are the different architecture styles followed in software design. **[5]**
Draw Architecture of ATM system.

c) Explain: **[7]**

i) Interactive interface

ii) Dynamic simulation

iii) Real time system

iv) Transaction manager

P.T.O.

Q5) a) Write short note on Data Dictionary. **[5]**

b) Explain the tasks involved in design optimization. **[5]**

c) What do you mean by scenario? What is the purpose of defining the scenario? Explain with Example. **[7]**

OR

Q6) a) Explain in detail the process of preparing an Activity Diagram from Use case Diagram. **[5]**

b) What do you mean by system design? Illustrate with suitable example. **[5]**

c) Prepare a data dictionary for ATM system scenario. Explain each element in brief. **[7]**

Q7) a) What is Design Pattern? Explain in Detail. **[5]**

b) Explain: Strategy Design Pattern. **[5]**

c) Explain: **[8]**

i) Creational pattern

ii) Structural Pattern

iii) Behavioral Pattern

OR

Q8) a) Explain the basic elements of design pattern. **[5]**

b) State and explain the entities involved in a design pattern. **[5]**

c) List and explain different types of design pattern. **[8]**



Total No. of Questions : 8] **SEAT No. :**

PB2250 **[Total No. of Pages : 3**

[6263]-88
B.E. (Computer Engineering)
DIGITAL SIGNAL PROCESSING
(2019Pattern) (Semester - VII) (Elective - III) (410244 E)

Time : 2½ Hours] ***[Max. Marks : 70***

Instructions to the candidates:

1) ***Answser Q.1 or Q.2, Q.3 or Q.4, Q.5 or Q.6, Q.7 or Q.8.***
2) ***Neat diagrams must be drawn wherever necessary.***
3) ***Figures to the right indicate full marks.***
4) ***Your answer will be valued as a whole.***
5) ***Use of logarithmic tables, slide rule, Mollier charts, electronic pocket calculator and steam tables is allowed.***
6) ***Assume suitable data, if necessary.***

Q1) a) State and prove Convolution property of Z transform. **[5]**

b) Derive the relationship between Fourier transform and z-transform. **[5]**

c) Find the Z transform of the discrete time signal,

$X(n) = a^n \cos(\omega_0 n)\, u(n)$ **[8]**

OR

Q2) a) Explain how ROC is important to determine the Causality and stability of LTI discrete time system. **[5]**

b) Using partial fraction expansion, find inverse z-transform of following system function and verify it using long division method **[5]**

$H(z) = \dfrac{1+2z^{-1}}{1-0.4z^{-1}-0.12z^{-2}}$ if h(n) is causal.

c) Determine IZT of following functions. **[8]**

i) $X(z) = \dfrac{z^2}{(z-1)(z-0.2)}$ ROC $|z| > 1$

ii) $X(z) = \dfrac{z^{-1}}{(1-3z^{-1})}$ ROC $|z| < 3$

P.T.O.

Q3) a) An LTI system is characterised by the transfer function, **[9]**

$$H(Z) = \frac{3 - 4z^{-1}}{1 - 3.5z^{-1} + 1.5z^{-2}}$$

Determine h(n) for the following condition

i) The system is stable

ii) The system is causal

iii) The system is non-causal

b) The difference equation of the system is given as **[8]**

$$y(n) = \frac{1}{2}x(n) + \frac{1}{2}x(n-1)$$

Find out

i) System Function

ii) Unit Sample response

iii) Pole zero plot

OR

Q4) a) Compute DFT of the sequence **[8]**

$x(n)$ = {1, 2, 2, 2, 1, 0, 0, 0} using DIF_FFT algorithm. Sketch its magnitude spectrum.

b) i) Show and compare computational complexity is reduced if 16-point DFT is computed using radix-2 DIT FFT algorithm **[5]**

ii) Find the IDFT using DIT-FFT of the given example **[4]**

X(k) = {10, –2+2j, –2–2j}

Q5) a) Explain the cyclic property of twiddle factor for 8 point DFT and compute the DFT of the following frequency **[8]**

$$X(n) = \cos\frac{n\pi}{4},\ n = 0,\ 1.2.3$$

b) Explain Linear Filtering using overlap add method and Find the output (n) of a filter whose impulse response is $h(n)$ = {1, 1, 1} and input signal x(n) = {3, –1, 0, 1, 3, 2, 0, 1, 2, 1} using overlap add method. **[9]**

OR

Q6) a) Explain FIR filter design using windowing techniques. **[8]**

b) Design a FIR digital filter to approximate an ideal LPF with passband gain of unity, cut off frequency 850 Hz and working at sampling frequency of 5000 Hz. The length of impulse response should be 5. Use a rectangular and hamming window. **[9]**

Q7) a) Design a Butterworth filter using impulse invariant method transformation to satisfy the following specifications. **[9]**

$0.707 \leq |H| \leq 1$; for $0 \leq\leq 0.2\pi$

$|H| \leq 0.2$; for $0.6\ \pi \leq\leq \pi$

b) Determine Direct Form I and II the filter given by **[9]**

$y(n) + 0.1y(n-1) + 0.72y(n-2) = 0.7x(n) - 0.95x(n)$.

OR

Q8) Write a short notes on following (any three)

a) SHARC DSP processor **[6]**

b) Gibbs phenomenon **[6]**

c) Finite word length effect in IIR filter Design **[6]**

d) OMAP (Open Multimedia Application Platform) **[6]**

Total No. of Questions : 8]

SEAT No. :

PB-2251

[Total No. of Pages : 2

[6263]-89
B.E. (Computer Engineering)
Information Retrieval
(Semester - VII) (2019 Pattern) (Elective - IV) (410245 - A)

Time : 2½ Hours] *[Max. Marks : 70*

Instructions to the candidates:

1) ***Answer Q.No. Q1 or Q2, Q3 or Q4, Q5 or Q6, Q7 or Q8***
2) ***Figures to right indicate full marks***
3) ***Neat diagrams must be drawn whenever necessary***
4) ***Assume suitable data, if necessary***

Q1) a) Explain Data Compression with Arithmetic Coding. **[9]**

b) What is Parametric and Non-Parametric Gap Compression? Explain it in detail. **[9]**

OR

Q2) a) Write a short note on: **[9]**

i) Decoding Performance

ii) Document Deletion

iii) Symbol wise Coding

b) Explain in detail Dynamic Inverted Indices **[9]**

Q3) a) Explain Probabilistic Classifiers & Generalized Linear Models. **[9]**

b) Explain the Information-Theoretic Model in detail. **[8]**

OR

Q4) a) Explain Categorization and Filtering with any two detailed Examples. **[9]**

b) Describe Ranking with Language Model. **[8]**

P.T.O.

Q5) a) Explain Traditional effectiveness measure and The Text Retrieval Conference (TREC) with suitable examples. **[9]**

b) Write a short note on: **[9]**

i) Redis and Memcached

ii) Measuring efficiency

OR

Q6) a) What is Scheduling and Caching in Measuring Efficiency? Explain in detail. **[9]**

b) Write a short note on: **[9]**

i) Using statistics in evaluation

ii) Minimizing adjudication Effort

Q7) a) Describe Parallel Information Retrieval in detail. **[8]**

b) Write a short note on: **[9]**

i) The structure of the web

ii) Quires and Users

iii) Static ranking

OR

Q8) a) Describe MapReduce with suitable examples. **[9]**

b) Write a short note on: **[8]**

i) Beautiful Soup

ii) Python Scrapy

iii) Web crawler libraries

iv) Dynamic ranking

Total No. of Questions : 8]

SEAT No. :

PB-2252

[Total No. of Pages : 2

[6263]-90
B.E. (Computer Engineering)
GPU Programming and Architecture
(Semester - VII) (2019 Pattern) (Elective - IV) (410245 - B)

Time : 2½ Hours] *[Max. Marks : 70*

Instructions to the candidates:

1) ***Attempt Q.1 or 2, 3 or 4, 5 or 6,7 or 8.***
2) ***Figures to right indicate full marks.***
3) ***Neat diagram must be drawn wherever necessary.***
4) ***Assume suitable data, if necessary.***

Q1) a) Explain different techniques for finding and solving CUDA error? **[6]**

b) Define synchronization? Explain synchronization issues in CUDA.? **[6]**

c) Describe Image feature extraction algorithm based on CUDA Architecture.? **[6]**

OR

Q2) a) Describe CUDA error handling APIs? **[6]**

b) Explain various common problems faced by CUDA programmers? **[6]**

c) Describe Race Hazard parallel programming issue? **[6]**

Q3) a) Describe OpenCL memory hierarchy.? **[6]**

b) What is OpenCL? Explain the various features of OpenCL standard? **[6]**

c) List and explain different OpenCL components? **[5]**

OR

Q4) a) List and explain the alternatives to OpenCL for CPU Programming? **[6]**

b) Draw &Explain OpenCL Execution Model? **[6]**

c) Discuss the memory object queries? **[5]**

P.T.O.

Q5) a) Describe the CPU parallel algorithms? **[6]**

b) Explain the sparse matrix multiplication model.? **[6]**

c) Explain heterogeneous cluster in detail? **[6]**

OR

Q6) a) Describe Parallel Predix Sum algorithms with suitable example? **[6]**

b) What is Parallelism? Explain Task based parallelism and data-based parallelism? **[6]**

c) Describe Common parallel Patterns: Loop-based and fork/join Pattern? **[6]**

Q7) a) Explain the different methods in Image Format Descriptor? **[9]**

b) Describe Efficient Neural Network Training/Inferencing? **[8]**

OR

Q8) a) Describe how OpenCL can be used for Heterogeneous computing **[9]**

b) How to design efficient neural network? Explain it? **[8]**

Total No. of Questions : 8]

SEAT No. :

PB-2253

[Total No. of Pages : 2

[6263]-91

B.E. (Computer Engineering)

MOBILE COMPUTING

(2019 Pattern) (Semester - VII) (410245C) (Elective - IV)

Time : 2½ Hours] *[Max. Marks : 70*

Instructions to the candidates :

1) ***Solve Q.1 or Q.2, Q.3 or Q.4, Q.5 or Q.6, Q.7 or Q.8.***
2) ***Neat diagrams must be drawn wherever necessary.***
3) ***Figures to the right indicate full marks.***
4) ***Assume suitable data, if necessary.***

Q1) a) Define and explain GSM Bust with diagram. **[5]**

b) Draw and explain the GPRS protocol stack. **[5]**

c) Explain spectrum allocation with the help of neat diagram. **[7]**

OR

Q2) a) Explain different architectures of WLAN. **[5]**

b) Explain UTRA-Network (UTRAN) architecture. **[5]**

c) Explain various traffic and control channels used in GSM network. **[7]**

Q3) a) Explain difference between Hard and Soft Handoff. **[5]**

b) Explain the Cell dragging in detail. **[5]**

c) Explain the process of call origination and call termination in GSM. **[7]**

OR

Q4) a) Explain mobility management with neat diagram. **[5]**

b) Define Handover. List and explain the types of handover. **[5]**

c) Explain GSM interfaces and GSM protocol architecture. **[7]**

P.T.O.

Q5) a) Describe data transfer from a mobile node to a fixed node and vice versa. **[6]**

b) Explain agent advertisement and discovery registration in mobile network. **[6]**

c) Why and how can optimization in mobile IP be achieved? **[6]**

OR

Q6) a) How is packet delivery achieved to and from mobile node. **[6]**

b) Discuss how tunneling works for mobile IP using IP_in_IP encapsulation. **[6]**

c) Explain the principal of snooping TCP. State advantages and disadvantages of Snooping TCP. **[6]**

Q7) a) Write short note on VoLGA architecture. **[6]**

b) Explain evolution from UMIS to LTE. **[6]**

c) Explain forward W-CDMA channel and reverse W-CDMA channel. **[6]**

OR

Q8) a) Explain in detail Frame format of TD-SCDMA and explain disadvantages of TD-SCDMA. **[6]**

b) What is HSPA? Explain in detail. **[6]**

c) Draw and explain functional architecture of 5G. **[6]**

▽▽▽▽

Total No. of Questions : 8]

SEAT No. :

PB-2254

[Total No. of Pages : 2

[6263]-92

B.E. (Computer Engineering)

SOFTWARE TESTING AND QUALITY ASSURANCE

(2019 Pattern) (Semester - VII) (Elective - IV) (410245D)

Time : 2½ Hours] *[Max. Marks : 70*

Instructions to the candidates :

1) ***Solve Q.1 or Q.2, Q.3 or Q.4, Q.5 or Q.6, Q.7 or Q.8.***
2) ***Neat diagrams must be drawn wherever necessary.***
3) ***Figures to the right indicate full marks.***
4) ***Assume suitable data, if necessary.***

Q1) a) Explain White box testing and Grey box testing in detail. **[6]**

b) Discuss Boundary Value Analysis and Equivalence Class Partition. **[6]**

c) Differentiate between Functional testing and Non-functional testing. **[6]**

OR

Q2) a) Explain the following test case design techniques : **[6]**

i) Informal Reviews

ii) Walkthroughs

iii) Inspection

b) What is Cookies testing? Explain Cookies testing with an example. **[6]**

c) Discuss Loop coverage testing and types of it in detail. **[6]**

Q3) a) Explain the following requirements of a product : **[4]**

i) Stated / Implied requirements

ii) Present / Future requirements

b) With neat diagram discuss waterfall model of software development. Also explain its limitations. **[8]**

c) Write a note on Customer Satisfaction. **[5]**

OR

P.T.O.

Q4) a) Give types of products based on the basis of criticality to the user. Explain each type with proper example. **[8]**

b) Discuss problematic areas in software development life cycle. **[6]**

c) List and explain limitations of Capability Maturity Models [CMM]. **[3]**

Q5) a) Differentiate between Manual Testing and Automation Testing. **[6]**

b) List and explain benefits of Automation testing. **[6]**

c) What is Performance testing? Explain the uses of it as well. **[6]**

OR

Q6) a) What is Automation testing? Explain it with an example. **[6]**

b) With neat diagram explain Automated testing process. **[6]**

c) Describe Apache Jmeter based on : **[6]**

i) Aim / Purpose

ii) Working

iii) Advantages

Q7) a) Explain the activities to achieve high software quality in detail. **[8]**

b) Write a note on Six Sigma strategy of software quality assurance. **[6]**

c) Explain in brief : Histogram, Flowchart and Control chart. **[3]**

OR

Q8) a) Explain ISO 9000 Standard in detail. **[6]**

b) Write a note on Software Quality Assurance [SQA] plan. **[5]**

c) Explain Ishikawa's basic tools for quality control. **[6]**

▽▽▽▽

Total No. of Questions : 8]

SEAT No. :

PB-2255

[Total No. of Pages : 2

[6263]-93

B.E. (Computer)

COMPILERS

(2019 Pattern) (Semester - VII) (Elective - IV) (410245E)

Time : 2½ Hours] ***[Max. Marks : 70***

Instructions to the candidates :

1) ***Solve Q.1 or Q.2, Q.3 or Q.4, Q.5 or Q.6, Q.7 or Q.8.***
2) ***Neat diagrams must be drawn wherever necessary.***
3) ***Figures to the right indicate full marks.***
4) ***Assume suitable data, if necessary.***

Q1) a) What is three address code? Explain Quadruples and Triples. **[10]**

b) Describe Syntax Directed Translation Scheme. **[8]**

OR

Q2) a) Generate annotated Parse Tree for expression a*b – c / e + f. **[10]**

b) Explain the forms with example S attributed Grammar & L attributed Grammar. **[8]**

Q3) a) Describe Static and Dynamic Scope. **[9]**

b) Describe any 2 Storage Allocation Methods. **[8]**

OR

Q4) a) What is Activation Record? List and Explain its Fields. **[9]**

b) Explain the Dangling Pointers. **[8]**

P.T.O.

Q5) a) Illustrate the DAG Representation of Basic Blocks. **[10]**

b) List and Explain any 2 Issues in Code Generation. **[8]**

OR

Q6) a) Construct the DAG for assignment Statement a+b*c+b*c+d. **[10]**

b) Explain Dynamic Programming algorithm for code generation. **[8]**

Q7) a) Explain any 2 Code Optimization Techniques with example. **[9]**

b) List and Explain Loops in Flow Graph. **[8]**

OR

Q8) a) Describe loop optimization technique - Code Motion. **[9]**

b) Draw a flow graph and explain Generation of Killing of Expression. **[8]**

▽▽▽▽

Total No. of Questions: 8]

SEAT No. :

PB2256

[Total No. of Pages :2

[6263]-94
B.E. (Computer Engineering)
HIGH PERFORMANCE COMPUTING
(2019 Pattern) (Semester-VIII) (410250)

Time : 2½ Hours] ***[Max. Marks : 70***

Instructions to the candidates:

1) ***Answer Q.1 or Q.2, Q.3 or Q.4, Q5 or Q6, Q7 or Q8.***
2) ***Figures to the right indicate full marks.***
3) ***Neat diagrms must be drawn wherever necessary.***
4) ***Make suitable assumptions whenever necessary.***

Q1) a) What is one-to-all broadcast? Explain it with the help of algorithm for one-to-all broadcast on hypercube. Comment on cost calculation. **[7]**

b) Explain scatter and gather communication operation. **[6]**

c) Explain circular shift operation. **[4]**

OR

Q2) a) Explain all to all broadcast and all to all reduction communication operation with example? Discuss cost analysis. **[7]**

b) Explain in detail Blocking and Non-Blocking Communication Using MPI. **[6]**

c) Comment on “Improving the Speed of Communication Operations.”**[4]**

Q3) a) Explain various sources of overhead in parallel systems. **[7]**

b) Show effect of granularity on performance with addition of n numbers on p processing elements. **[6]**

c) Explain amdahl’s and gustafson’s law. **[4]**

OR

Q4) a) Explain different performance Metrics for Parallel Systems. **[7]**

b) Explain parallel Matrix-Matrix multiplication algorithm with example. **[6]**

c) Comment on “Scalability of Parallel Systems”. **[4]**

P.T.O.

Q5) a) Draw and explain CUDA architecture in details. **[8]**

b) Describe processing flow of cuda along with cuda c functions. **[6]**

c) Write advantages and limitations of CUDA. **[4]**

OR

Q6) a) Explain how the CUDA C program executes at the kernel level with example. **[8]**

b) Explain cuda memory model in brief. **[6]**

c) Write applications of cuda. **[4]**

Q7) a) What are the issues in sorting on parallel computers, explain with example? **[8]**

b) Explain BFS for parallel execution & analyze its complexity. **[6]**

c) Write short note on Kubernets. **[4]**

OR

Q8) a) Compare an algorithm for sequential and parallel Merge sort. Analyze the complexity for the same. **[8]**

b) Explain Parallel Depth First Search algorithm in detail. **[6]**

c) Write short note on GPU Applications. **[4]**



Total No. of Questions : 8]

SEAT No. :

PB2257

[Total No. of Pages : 2

[6263]-95
B.E. (Computer Engineering)
DEEP LEARNING
(2019 Pattern) (Semester - VIII) (410251)

Time : 2½ Hours] *[Max. Marks : 70*

Instructions to the candidates:

1) ***Solve Q.1 or Q.2, Q.3 or Q.4, Q.5 or Q.6, Q.7 or Q.8.***
2) ***Figures to the right indicate full marks.***
3) ***Neat diagrams must be drawn whenever necessary.***
4) ***Make suitable assumption whenever necessary.***

Q1) a) Explain CNN architecture with its application. **[6]**

b) What is Padding? Enlist and explain types of padding. **[6]**

c) Explain Dropout Layer in Convolutional Neural Network. **[6]**

OR

Q2) a) Define ReLU. Explain disadvantages of ReLU. **[6]**

b) What is Strides in CNN? Explain in brief. **[6]**

c) Explain Pooling Layer with its different types. **[6]**

Q3) a) Explain RNN with its types. **[6]**

b) Explain in brief Encoder Decoder architecture. **[6]**

c) Explain Different types of Deep Learning. **[5]**

OR

Q4) a) WSN on Performance Matrices. **[6]**

b) Compare implicit and explicit memory. **[6]**

c) What are default baseline models? Explain in brief. **[5]**

Q5) a) State and explain different types of GAN. **[6]**

b) What is Boltzmann machine? Explain its objectives. **[6]**

c) Write short Note on Deep generative model and Deep Belief Networks. **[6]**

OR

P.T.O.

Q6) a) Define Boltzmann machine? State and Explain its types. **[6]**

b) Explain Discriminator network. **[6]**

c) Enlist and Explain applications of GAN. **[6]**

Q7) a) What is Reinforcement Learning? State and explain its advantages and disadvantages. **[6]**

b) What are different types of Reinforcement Learning? Explain in brief. **[6]**

c) Compare Active and Passive Reinforcement Learning. **[5]**

OR

Q8) a) Write short note on Deep Q-Learning. **[6]**

b) What are different characteristics of Reinforcement Learning? **[6]**

c) Explain in detail Dynamic programming algorithms for reinforcement learning. **[5]**

Total No. of Questions: 8]

SEAT No. : ____

PB2258

[Total No. of Pages :3

[6263]-96

B.E.(Computer Engineering)

NATURAL LANGUAGE PROCESSING

(2019 Pattern) (Semester-VIII) (Elective-V) (410252 A)

Time : 2½ Hours] ***[Max. Marks : 70***

Instructions to the candidates:

1) ***Answer Q1 or Q2, Q3 or Q4, Q5 or Q6, Q7 or Q8.***
2) ***Neat diagrams must be drawn wherever necessary.***
3) ***Figures to the right side indicate full marks.***
4) ***Assume Suitable data if necessary.***

Q1) a) What are generative models of language, and how do they differ from discriminative models? Provide an example of a generative model and describe how it can be used in NLP. **[9]**

b) Define Latent Dirichlet Allocation (LDA) and explain how it is used for topic modeling in text data. Discuss the key components of LDA, including topics, documents, and word distributions. **[9]**

OR

Q2) a) Describe the concept of contextualized representations, such as those generated by BERT, and how they are used in natual language processing. Discuss the advantages and disadvantages of contextualized representations. **[10]**

b) Suppose you have a text corpus of 10,000 words, and you want to build a bigram model from this corpus. The vocabulary size of the corpus is 5,000. After counting the bigrams in the corpus, you found that the bigram “the cat” appears 50 times, while the unigram “the” appears 1000 times and the unigram “cat” appears 100 times. Using the add-k smoothing method with k=0.5, what is the probability of the sentence “the cat sat on the mat”? **[8]**

P.T.O.

Q3) a) Describe the Vector Space Model (VSM) for information retrieval. How does VSM represent documents and queries, and how are similarities calculated? Discuss the strengths and weaknesses of VSM. **[9]**

b) Discuss the different methods used for evaluating NER systems. What are common metrics for measuring NER system performance, and how can the results be analyzed to improve the system? **[9]**

OR

Q4) a) Define Cross-Lingual Information Retrieval (CLIR) and discuss the challenges involved in retrieving information from languages different from the query language. How do machine translation techniques assist in CLIR? **[9]**

b) Explain the importance of entity extraction in NLP. How does entity extraction differ from named entity recognition, and provide examples of real-world applications where entity extraction is crucial. **[9**

Q5) a) Describe Walker's algorithm for word sense disambiguation. How does it differ from other disambiguation techniques like Lesk's Algorithm, and what are the scenarios where it can be most effective? **[9]**

b) Compare the Indo Word Net with the traditional WordNet. What are the key differences and advantages of IndoWordNet, especially in the context of Indian languages? **[8]**

OR

Q6) a) Compare and constrast the natural Language Toolkit (NLTK), spaCy, and TexBlob. what are their main features and in what use cases are they most suitable? **[9]**

b) What is the significance of PropBank and VerbNet in linguistic resources? Provide examples of how these resoures can be used to extract semantic information from text. **[8]**

Q7) a) Define natural language generation and its role in NLP. How does NLG differ from text-to-speech synthesis, and what are the applications of NLG in data reporting and storytelling? **[9]**

b) Discuss the challenges in cross-lingual translation and provide examples of how it is beneficial in real-world applications. **[8]**

OR

Q8) a) Explain the key principles of rule-based machine translation. How do rule-based techniques differ from statistical approaches in machine translation? provide an example of a rule-based translation. **[9]**

b) Discuss the key components of a conversational agent, such as chatbots or virtual assistants. How do natural language generation and understanding play a role in creating effective conversational agents? **[8]**



Total No. of Questions : 8]

SEAT No. :

PB2259

[Total No. of Pages : 2

[6263]-97
B.E. (Computer Engineering)
IMAGE PROCESSING
(2019 Pattern) (Semester-VIII) (410252B) (Elective-V)

Time : 2½ Hours] *[Max. Marks : 70*

Instructions to the candidates:

1) ***Attempt question Q1 or Q2, Q3 or Q4, Q5 or Q6, Q7 or Q8.***
2) ***Neat diagrams must he drawn wherever necessary.***
3) ***Assume suitable data if necessary.***

Q1) a) What is image segmentation and its need? **[6]**

b) Explain edge-based segmentation. **[6]**

c) Explain the significance of thresholding in image segmentation. **[6]**

OR

Q2) a) Explain Image Segmentation? **[6]**

b) Discuss various steps involved in Canny Edge detection algorithms? **[6]**

c) Summarize the process of edge linking using Hough transform. **[6]**

Q3) a) What is the redundancy? Explain any 3 type of redundancies useful for compression. **[6]**

b) Explain Run-Length encoding with example? **[6]**

c) Describe arithmetic coding with an example for compression of image. **[6]**

OR

Q4) a) With the help of neat block diagram explain Lossy Predictive Coding? **[6]**

b) Explain Huffman encoding with example? **[6]**

c) Explain Wavelet based Image Compression technique. **[6]**

P.T.O.

Q5) a) Write short note on Gamma and Gaussian noise models. **[6]**

b) Compare the Image Enhancement and Image Restoration. **[6]**

c) Explain Wiener Filter used in Image Restoration. **[5]**

OR

Q6) a) Explain any two methods of Image Restoration. **[6]**

b) Explain Image degradation model with diagram. **[6]**

c) Explain Inverse Filtering? **[5]**

Q7) a) What is the principal application of photogrammetry? **[6]**

b) What are Medical Image Modalities? **[6]**

c) What are the differences between multispectral and hyperspectral imagery? **[5]**

OR

Q8) a) How Medical Images are Enhanced. **[6]**

b) Write a short note on Images from X rays and its application. **[6]**

c) Write a note on 'Satellite Image Processing'. **[5]**



Total No. of Questions: 8]

SEAT No. :

PB2260

[Total No. of Pages :2

[6263]-98

B.E.(Computer Engineering)

SOFTWARE DEFINED NETWORKS

(2019 Pattern) (Semester-VIII) (410252(C)) (Elective-V)

Time : 2½ Hours] ***[Max. Marks : 70***

Instructions to the candidates:

1) ***Attempt Q1 or Q2, Q3 or Q4, Q5 or Q6, Q.7 or Q8.***
2) ***Figures to the right indicate full marks.***
3) ***Neat diagrams must be drawn wherever necessary.***
4) ***Assume suitable data if necessary.***

Q1) a) Explain the following terms with respect to data center demands, Adding, Moving, Deleting, Failure recovery, and Multitenancy. **[6]**

b) Write a short note on VLANs. **[6]**

c) What short note on Traffic Engineering? **[6]**

OR

Q2) a) Explain the data center architecture components. **[6]**

b) Explain SDN Use Cases in Data Centre. **[6]**

c) What are data center demands? **[6]**

Q3) a) What is mininet? Explain its basic commands? **[6]**

b) What is SDN Programming? **[6]**

c) What are the applications of SDN? **[5]**

OR

Q4) a) What is the Composition of SDN? **[6]**

b) Explain Northbound Programming Interface **[6]**

c) What are Current Languages and Tools? **[5]**

P.T.O.

Q5) a) Explain Southbound Application Interface in detail. **[6]**

b) Distinguish between SDN Vs NVF. **[6]**

c) How NVF Works? **[6]**

OR

Q6) a) Explain NVF architecture. **[6]**

b) What are the challenges of NVF? **[6]**

c) What is an in-line Network Function? **[6]**

Q7) a) Write a short note on Data Center Orchestration. **[6]**

b) What is IETF SDN Framework? **[6]**

c) Explain Juniper SDN Framework. **[5]**

OR

Q8) a) Write in brief about Floodlight Controller? **[6]**

b) Explain ODL (Open Daylight) controller? **[6]**

c) What is Bandwidth Calendaring (BWC)? **[5]**



Total No. of Questions : 8]

SEAT No. :

PB2261

[Total No. of Pages : 2

[6263]-99

B.E. (Computer Engineering)

ADVANCED DIGITAL SIGNAL PROCESSING

(2019 Pattern) (Semester-VIII) (410252D) (Elective-V)

Time : 2½ Hours] *[Max. Marks : 70*

Instructions to the candidates:

1) ***Attempt question Q1 or Q2, Q3 or Q4, Q5 or Q6, Q7 or Q8.***
2) ***Assume suitable data if necessary.***
3) ***Neat diagrams must be drawn wherever necessary.***
4) ***Figures to the right indicate full marks.***

Q1) a) What is Decimation in Sampling rate? And explain Decimation by a Factor D and Interpolation by a Factor I. **[10]**

b) Explain the applications of MultiMate signal processing. **[8]**

OR

Q2) a) Describe sampling rate conversion of band pass signals linear prediction. **[10]**

b) Draw and explain Lattice-ladder structure for ARMA filters. **[8]**

Q3) a) Write a short note on KL transform. **[6]**

b) Compare DCT and Wavelet transform. **[5]**

c) State application of DCT and wavelet transform. **[5]**

OR

Q4) a) What are the different Nonparametric and parametric methods of spectral analysis? **[8]**

b) Explain in detail Harr Transform. **[8]**

Q5) a) Explain Adaptive transform coding of speech signals. **[9]**

b) Write a short note on Harmonic Coding. **[9]**

OR

P.T.O.

Q6) a) What are the different methods for speech enhancement techniques? **[9]**

b) Explain in brief Speech segmentation. **[9]**

Q7) a) What is image enhancement? Explain image enhancement techniques. **[10]**

b) Describe image smoothing. And explain different type of image smoothening techniques. **[8]**

OR

Q8) a) Write equation for different edge Detection Operators in Digital Image Processing. **[10]**

b) What is need of filtering techniques in image processing? Compare Wiener filter and Median filter. **[8]**



Total No. of Questions : 8]

SEAT No. :

[Total No. of Pages : 2

PB-2262

[6263]-100
B.E.(Computer Engineering)
PATTERN RECOGNITION
(2019 Pattern) (Semester - VIII) (Elective - VI) (410253(A))

Time : 2½ Hours] *[Max. Marks : 70*

Instructions to the candidates:

1) ***Answer Q1 or Q2, Q3 or Q4, Q5 or Q6, Q7 or Q8.***
2) ***Figures to the right side indicate full marks.***

Q1) a) Explain in detail Tree classifiers - Decision Trees. **[6]**

b) What is elements of formal grammars explain in detail. **[6]**

c) Explain in detail the stochastic method : Boltzman learning. **[5]**

OR

Q2) a) Compare Decision Tree & Random Forest. **[6]**

b) Explain how graph-based structural representations used in pattern recognition. **[6]**

c) Explain in detail the stochastic method & its applications. **[5]**

Q3) a) Describe in detail K-Means algorithm. **[6]**

b) Explain minimum spanning tree with example. **[6]**

c) Write a short note on : Hierarchical clustering. **[5]**

OR

Q4) a) Explain simulated annealing optimization in clustering. **[6]**

b) Briefly describe partitioning clustering. **[6]**

c) What is single linkage, complete linkage & Average linkage in clustering? **[5]**

Q5) a) Explain the edit distance & it's applications. **[6]**

b) What is Bellman Ford Algorithm? Explain with example. **[6]**

c) Explain in detail pearson correlation coefficient spearman rank correlation coefficient. **[6]**

OR

P.T.O

Q6) a) What is dynamic time wrapping? & how it is used in pattern recognition? **[6]**

b) What are the optimal path searching techniques in pattern recognition? **[6]**

c) Explain deformable template models in pattern recognition. **[6]**

Q7) a) What is fuzzy logic in pattern recognition & how it is used in classification. **[6]**

b) Define pattern recognition. State various applications of pattern recognition. **[6]**

c) Explain in details Biometrics system. **[6]**

OR

Q8) a) Explain the steps involved in genetic algorithm for pattern classification. **[6]**

b) Write a note on Fuzzy pattern classifiers. **[6]**

c) Explain in detail IRIS Scanner & give it's applications. **[6]**



Total No. of Questions : 8]

SEAT No. :

PB-2263

[Total No. of Pages : 2

[6263]-101

B.E. (Computer Engineering)

SOFT COMPUTING

(2019 Pattern) (Semester - VIII) (410253B) (Elective-VI)

Time : 2½ Hours] *[Max. Marks : 70*

Instructions to the candidates:

1) ***Answer Q.1 or Q.2, Q.3 or Q.4, Q.5 or Q.6, Q.7 or Q.8.***
2) ***Neat diagrams must be drawn wherever necessary.***
3) ***Assume Suitable data if necessary.***

Q1) a) Explain Simulated Annealing with suitable diagram. **[6]**

b) Describe Evolutionary Computing. **[6]**

c) Explain the Evolutionary Single-Objective Optimization in detail. **[6]**

OR

Q2) a) Explain Problem Solving as A Search Task. **[6]**

b) Describe the Evolution Strategies. Give 2 applications of evolutionary strategies. **[6]**

c) Explain Particle Swarm Optimization. **[6]**

Q3) a) Describe any two properties of classical sets. **[6]**

b) Explain Intuition method of Membership value Assignment. **[5]**

c) Describe applications of Fuzzy Logic Control System. **[6]**

OR

Q4) a) Describe any two properties of fuzzy sets. **[6]**

b) Explain Centroid Method of defuzzification. **[5]**

c) Explain System Models of Fuzzy Logic Control System. **[6]**

P.T.O.

Q5) a) Describe Hexadecimal Encoding in Genetic Algorithm. **[6]**

b) Explain the 'Best Individual' Stopping Condition for Genetic Algorithm Flow. **[5]**

c) Describe the Bucket Brigade Algorithm of Holland Classifier System. **[6]**

OR

Q6) a) Describe Three Parent Crossover (Recombination) in Genetic Algorithm. **[6]**

b) Explain the 'Worst Individual' Stopping Condition for Genetic Algorithm Flow. **[5]**

c) Mention the applications of Genetic Algorithms. **[6]**

Q7) a) Explain Hybrid connectionist production systems. **[9]**

b) Describe Fuzzy-filtered Neural Networks-Plasma Spectrum Analysis. **[9]**

OR

Q8) a) Explain the hybrid systems for disease prediction. **[9]**

b) Describe Hand-written Numeral Recognition. **[9]**

⌘⌘⌘

Total No. of Questions : 8]

SEAT No. :

PB-2264

[Total No. of Pages : 2

[6263]-102

B.E. (Computer Engineering)

BUSINESS INTELLIGENCE

(2019 Pattern) (Semester - VIII) (410253C) (Elective-VI)

Time : 2½ Hours] *[Max. Marks : 70*

Instructions to the candidates:

1) ***Answer Q.1 or Q.2, Q.3 or Q.4, Q.5 or Q.6, Q.7 or Q.8.***
2) ***Neat diagrams must be drawn wherever necessary.***
3) ***Figures to the right indicate full marks.***
4) ***Assume Suitable data, if necessary.***

Q1) a) What are the important BI reporting practices? **[6]**

b) Discuss the importance of drill up, drill-down and drill-through capabilities in report preparation. **[6]**

c) Explain with examples the use of Data Grouping and sorting, Filtering is important in BI Reports. **[5]**

OR

Q2) a) Explain the multi-dimensional Data Model with a suitable case study. What are the Advantages of Multi-Dimensional Data Model? **[6]**

b) What is importance of adding Conditional formatting and adding calculations in report **[6]**

c) How the business report helps any organization? **[5]**

Q3) a) Discuss the need for data pre-processing and any 2 techniques used. **[6]**

b) What is data transformation? Why it is needed? Explain at least 3 techniques. **[6]**

c) What is data reduction? Explain Dimensionality Reduction and Data Compression **[6]**

OR

P.T.O.

Q4) a) Define dirty data. What are the reasons of dirty data. **[6]**

b) Explain the working of binning with suitable example. **[6]**

c) What is Bivariate analysis? Why it is important. Discuss the different types with example? **[6]**

Q5) a) What is logistic regression? Discuss the types of logistic regression. **[6]**

b) How the classification and clustering are different. Discuss use with example. **[6]**

c) What is a decision tree? Explain with a case study. **[6]**

OR

Q6) a) What is the K-mean clustering? Explain the step-by-step working of the k-mean algorithm. **[6]**

b) What is the Apriori Algorithm? Discuss the applications of this algorithm with example**.** **[6]**

c) Define - Frequent item set, Minimum Support Count, Hierarchical Clustering, Regression. **[6]**

Q7) a) What are the advantages of Benefits of Business Intelligence in ERP. **[5]**

b) What is the role of Analytics in Business Intelligence? **[6]**

c) Write short note on WEKA, Rapid Miner. **[6]**

OR

Q8) a) Discuss the use of BI Applications in Logistics and Production. **[5]**

b) Justify BI is useful for Customer Relationship Management? **[6]**

c) Write short note on KNIME, BI and HR management. **[6]**

⌘⌘⌘

Total No. of Questions : 8]

SEAT No. :

PB-2265

[Total No. of Pages : 2

[6263]-103
B.E.(Computer Engg.)
QUANTUM COMPUTING
(Elective - VI) (2019 Pattern) (Semester - VIII) (410253D)

Time : 2½ Hours] ***[Max. Marks : 70***

Instructions to the candidates:

1) ***Neat diagrams must be drawn wherever necessary.***
2) ***Figures to the right side indicate full marks.***
3) ***Use of calculator is allowed.***
4) ***Assume suitable data, if necessary.***

Q1) a) Describe three universal quantum gates used in quantum computations and explain their significance in building quantum circuits. **[8]**

b) Explain the decomposition process of a unitary matrix U, operating on a d-dimensional Hilbert space, into a sequence of two-level unitary matrices, detailing the theoretical principles and mathematical techniques involved. **[9]**

$$U = \begin{bmatrix} a & d & g \\ b & e & h \\ c & f & j \end{bmatrix}$$

OR

Q2) a) Explain how a combination of single-qubit and CNOT gates can be used to perform any desired two-level unitary operation within the state space of n qubits. **[8]**

b) Describe the process of assessing the efficiency of approximating quantum circuits when using a discrete set of gates. **[9]**

Q3) a) Analyze and articulate the mathematical formulations and conceptual underpinnings of the following terms within the domain of simulating quantum systems: **[8]**

i) Schrödinger's equation, including its time-dependent and time independent forms

ii) Diffusion equation as applied in quantum systems

b) Describe the feasibility of constructing a quantum circuit using a universal set of quantum gates. Justify your answer by discussing the properties and capabilities of universal quantum gates in quantum computation.**[9]**

P.T.O

OR

Q4) a) List three basic examples of quantum error-correcting codes and explain one of them in detail. **[8]**

b) Define the discrete Fourier transform and elaborate on the concept of Fourier coefficients, discussing their significance in signal processing and data analysis. **[9]**

Q5) a) Propose an algorithm for quantum phase estimation, detailing its steps and underlying principles. Subsequently, analyze the significance of phase estimation within the realm of quantum computing, including its role in quantum algorithms and potential applications. **[9]**

b) Within the broader applications of the quantum Fourier transform, provide explanations for the following concepts: **[9]**

i) The hidden subgroup problem

ii) Discrete logarithms

OR

Q6) a) Describe why order-finding is considered a challenging problem on a classical computer. **[9]**

b) Analyze the shift-invariance property of the Fourier transform within the framework of group theory, with G representing a group and H as a subgroup. Discuss how this property manifests in the context of signal processing and its implications for understanding the underlying mathematical structure. **[9]**

Q7) a) Explain the terms Adiabatic Quantum Computing and Quantum Parallelism within the context of the relationship between quantum information theory and machine learning. **[9]**

b) Provide a comprehensive definition of the Quantum Key Distribution (QKD) protocol, outlining its key components and operational principles. Subsequently, analyze the role of the QKD protocol in safeguarding the security of quantum key distribution. **[9]**

OR

Q8) a) Explore the role of potential energy derived from the Hamiltonian in dynamic quantum clustering, elucidating how it contributes to the clustering process and the optimization of cluster assignments. **[9]**

b) Explain the concept of private key cryptography and provide an overview of the encoding and decoding process within a private key crypto-system, detailing how messages are secured and transmitted securely between parties. **[9]**

☺☺☺

Total No. of Questions : 8]

SEAT No. :

PB2266

[Total No. of Pages : 2

[6263]-104
B.E. (Electrical Engineering)
POWER SYSTEM OPERATION & CONTROL
(2019 Pattern) (Semester - VII) (403141)

Time : 2½ Hours] *[Max. Marks : 70*

Instructions to the candidates:

1) ***Answer Q. 1 or Q. 2, Q. 3 or Q. 4, Q. 5 or Q.6, Q. 7 or Q. 8.***
2) ***Neat diagrams must be drawn wherever necessary.***
3) ***Figures to the right indicate full marks.***
4) ***Assume suitable additional data, if necessary.***
5) ***Use of non-programmable calculator is allowed.***

Q1) a) What is control area concept? Define control area error. **[4]**

b) Develop the block diagram of the load frequency control (LFC) of a single area system. **[6]**

c) Explain clearly about proportional plus integral LFC with a block diagram. **[8]**

OR

Q2) a) Explain the necessity of maintaining the constant frequency of the system. **[4]**

b) Explain droop characteristics of the speed governor system. **[6]**

c) Derive transfer function of speed governor system used in single area load frequency control. **[8]**

Q3) a) Discuss operating cost of thermal unit? What is incremental cost curve.**[3]**

b) A generating unit has two 200 MW units whose input cost data is as under

$F1 = 0.004\ P_1^2 + 2.0\ P_1 + 80$ Rs/hr

$F2 = 0.006\ P_2^2 + 1.5\ P_2 + 100$ Rs/hr

For a total load of 250 MW find the load division between the two units for economic operation. **[6]**

c) Derive the expression for optimal system operation considering transmission loss (penalty factor) for economic load Dispatch (ELD).**[8]**

OR

P.T.O.

Q4) a) What is the concept of unit commitment in the optimal operation of power system? **[3]**

b) With an example, explain the priority list method for unit commitment. **[6]**

c) Determine the saving in fuel cost in Rs/hr for the economic distribution of a total load of 225 MW between the two units with IFCs **[8]**

$dC_1/dP_{g1} = 0.075\ P_{g1} + 15$ Rs/hr

$dC_2/dP_{g2} = 0.085\ P_{g1} + 12$ Rs/hr

Compare with equal distribution of the same total load.

Q5) a) State the advantages of interconnection of power system. **[4]**

b) Write a short note on power pool? **[6]**

c) Explain: **[8]**

i) Diversity interchange

ii) Energy banking

OR

Q6) a) Explain the concept of power pool? **[4]**

b) Discuss the economy interchange between interconnected utilities **[6]**

c) Explain:

i) Capacity Interchange. **[8]**

ii) Interchange evaluation with unit commitment.

Q7) a) Define Voltage stability? Write equation for active power and reactive power for stability. **[3]**

b) Plot a typical P-V curve and write the observations form PV curve. **[6]**

c) Explain problem associated with voltage instability in power system. **[8]**

OR

Q8) a) Discuss the causes of voltage collapse. **[3]**

b) Write a short note on Q-V curve. **[6]**

c) Explain the following voltage stability indices. **[8]**

i) Line stability factor (LQP)

ii) Line stability index (LSI)

❋ ❋ ❋

Total No. of Questions : 8]

SEAT No. :

[Total No. of Pages : 2

PB-2267

[6263]-105
B.E.(Electrical Engineering)
ADVANCED CONTROL SYSTEM
(2019 Pattern) (Semester - VII) (403142)

Time : 2½ Hours] *[Max. Marks : 70*

Instructions to the candidates:

1) ***Solve Q1 or Q2, Q3 or Q4, Q5 or Q6, Q7 or Q8.***
2) ***Figures to teh right side indicate full marks.***
3) ***Neat diagrams must be drawn wherever necessary.***
4) ***Assume suitable data if necessary.***
5) ***Use of non-programmable calculator is allowed.***

Q1) a) State and prove the properties of state transition matrix (STM). **[4]**

b) Define state, state vector, state equation and output Equation. Draw state diagram. **[6]**

c) For a given system **[8]**

$$A=\begin{pmatrix} 0 & 1 \\ -2 & -3 \end{pmatrix} \quad x(0)=\begin{pmatrix} 1 \\ 0 \end{pmatrix}$$

OR

Q2) a) Write down the steps to be followed for computing state transition matrix using Caley Hamilton theorem. **[4]**

b) Evaluate the transfer function Y(s)/U(s) from the state variable model of a system with usual notation. **[6]**

$$\dot{x}=\begin{pmatrix} -2 & -3 \\ 4 & 2 \end{pmatrix}x+\begin{pmatrix} 3 \\ 5 \end{pmatrix}u, \quad y=\begin{pmatrix} 1 & 1 \end{pmatrix}x$$

c) Obtain diagonal canonical state model of state Space representation of the system. Also draw state model diagram. **[8]**

$$\frac{C(s)}{R(s)}=\frac{s+5}{s^3+6s^2+11s+6}$$

P.T.O

Q3) a) What is principle of Duality? Explain effect of pole-zero cancellation on Controllability and Observability. **[7]**

b) Given **[10]**

$$x=\begin{pmatrix}0 & 1 & 0\\ 0 & 0 & 1\\ 0 & -2 & -3\end{pmatrix}x+\begin{pmatrix}0\\ 0\\ 1\end{pmatrix}u$$

$$y=\begin{pmatrix}1 & 3 & 2\end{pmatrix}x$$

Determine Controllability& Observability of the system.

OR

Q4) a) Derive and explain Ackermann's formula for pole placement design. **[7]**

b) For a given system **[10]**

$$A=\begin{pmatrix}0 & 1\\ 0 & -2\end{pmatrix}\quad B=\begin{pmatrix}0\\ 4\end{pmatrix}\quad C=\begin{pmatrix}1 & 0\end{pmatrix}$$

Determine the observer gain matrix K_e such that the observer poles are placed at $S_1, S_2 = -8, -8$.

Q5) a) Explain mapping between s-plane and z-plane with proper diagrams. **[8]**

b) Determine stability of system using Jury's test whose characteristic polynomial is $P(z) = Z^3 + 2.1Z^2 + 1.44Z + 0.32 = 0$. **[10]**

OR

Q6) a) Explain the sampling and reconstruction process. Also state the sampling theorem and give its importance. **[8]**

b) Explain in detail the basic building blocks of discrete time control System with appropriate diagram. **[10**

Q7) a) What is adaptive control? **[3]**

b) List the salient properties of sliding mode control. **[6]**

c) What is reaching law? Why is it required? Derive expressions of control for constant rate reaching law, constant plus proportional rate reaching law and power rate reaching law. **[8]**

OR

Q8) a) Explain the terms sliding phase and reaching phase in the context of sliding mode control. **[3]**

b) Explain the gain scheduling adaptive scheme with a block diagram. **[6]**

c) Draw block diagram of Model Reference Adaptive Control scheme and explain it. **[8]**

☺☺☺

Total No. of Questions : 8]

SEAT No. : ____

PB2268

[Total No. of Pages : 2

[6263]-106
B.E. (Electrical)
PLC AND SCADA
(2019 Pattern) (Semester - VII) (Elective - III) (403143 A)

Time : 2½ Hours] ***[Max. Marks : 70***

Instructions to the candidates:

1) ***Answser Q.1 or Q.2, Q.3 or Q.4, Q.5 or Q.6, Q.7 or Q.8.***
2) ***Neat diagrams must be drawn wherever necessary.***
3) ***Figures to the right indicate full marks.***
4) ***Assume suitable data if necessary.***

Q1) a) Draw ladder diagram for following functional table **[8]**

I1, I2 - Inputs and C1, C2, C3, C4-Outputs

I1	I2	C1	C2	C3	C4
0	0	1	1	1	0
0	1	0	1	1	1
1	0	1	0	1	1
1	1	1	1	0	1

b) Explain TON timer along with its three bits. Draw its timing diagram. **[9]**

OR

Q2) a) Explain programming equipment. **[7]**

b) Draw a Ladder diagram traffic light controller. **[10]**

Q3) a) Explain PID controller for closed loop system. **[9]**

b) Explain adjust and observe method of PID tuning. **[9]**

OR

Q4) a) Explain solid state control of DC motor for speed control. **[9]**

b) Explain speed control of DC motor using PLC. **[9]**

Q5) a) Explain three generations of SCADA? **[9]**

b) Explain application of SCADA system in water purification system. **[8]**

OR

P.T.O.

Q6) a) Draw and explain SCADA architecture in details. **[8]**

b) Define RTU, MTU, HMI related with SCADA system. **[9]**

Q7) a) Explain relationship among CIP and other protocols. **[9]**

b) Explain Device Net protocol in detail. **[9]**

OR

Q8) a) Explain architecture of Distribution Control System (DCS). **[9]**

b) Compare PLC and DCS. **[9]**



Total No. of Questions : 8]

SEAT No. :

PB2269

[Total No. of Pages : 2

[6263]-107
B.E. (Electrical Engineering)
POWER QUALITY MANAGEMENT
(2019 Pattern) (Semester - VII) (403143 B) (Elective - III)

Time : 2½ Hours] *[Max. Marks : 70*

Instructions to the candidates:

1) ***Solve Q.1 or Q.2, Q.3 or Q.4, Q.5 or Q.6, Q.7 or Q.8.***
2) ***Figures to the right indicate full marks.***
3) ***Neat diagrams must be drawn wherever necessary.***
4) ***Assume suitable data, if necessary.***
5) ***Use of non-progammable calculator is allowed.***

Q1) a) With suitable diagram, define voltage sag. **[4]**

b) Explain voltage sag characteristics - magnitude, duration, and phase angle jump. **[6]**

c) List various voltage sag mitigation techniques and explain any one. **[8]**

OR

Q2) a) With suitable diagram define voltage swell. **[4]**

b) Draw and explain ITIC curve. **[6]**

c) Explain in brief the major causes and effects of voltage sags. **[8]**

Q3) a) With the help of waveform define harmonic. **[3]**

b) Write detail notes on triplen harmonics. **[6]**

c) Discuss in detail various sources of harmonics. **[8]**

OR

Q4) a) Define harmonics, inter-harmonics, sub-harmonics. **[3]**

b) Explain following terms in context to non-sinusoidal supply conditions- **[6]**

i) True power factor

ii) Distortion power factor

iii) Total harmonic distortion

c) Explain in detail any three effects of harmonics. **[8]**

P.T.O.

Q5) a) Write note on Principles for controlling harmonics. **[7]**

b) With neat diagram explain the phenomenon of Series and parallel resonance. **[10]**

OR

Q6) a) What is K-rated transformer? Explain its use in context with Power Quality. **[7]**

b) Differentiate between passive and active harmonic filters. **[10]**

Q7) a) Discuss the Objectives of Power quality monitoring. **[8]**

b) Write detail note on instruments used for power quality measurement and monitoring. **[10]**

OR

Q8) a) Explain different criterions for selection of voltage and current transducers for PQ monitoring. **[8]**

b) Write note on Selection of power quality monitors, monitoring location and period. **[10]**

Total No. of Questions : 8]

SEAT No. :

PB2270

[Total No. of Pages : 2

[6263]-108
B.E. (Electrical)
HIGH VOLTAGE ENGINEERING
(2019 Pattern) (Semester - VII) (403143 C) (Elective - III)

Time : 2½ Hours] *[Max. Marks : 70*

Instructions to the candidates:

1) ***Answser Q.1 or Q.2, Q.3 or Q.4, Q.5 or Q.6, Q.7 or Q.8.***
2) ***Neat diagrams must be drawn wherever necessary.***
3) ***Figures to the right indicate full marks.***
4) ***You are advised to attempt not more than 6 questions.***
5) ***Use of logarithmic tables slide rule, Mollier charts, electronic pocket calculator and steam tables is allowed.***
6) ***Assume suitable data, if necessary.***

Q1) a) State & explain with diagram causes of power frequency over voltages & switching surges. **[9]**

b) Explain Reynolds & Mason's Theory. **[8]**

OR

Q2) a) Write a short note on insulation co-ordination. **[9]**

b) Describe in detail Lightening phenomenon. **[8]**

Q3) a) What is a Tesla coil? How damped high frequency oscillations are obtain from Tesla coil. **[9]**

b) A 12 stage impulse generator has 0.2 μF capacitors. The wave front and the wave tail resistance connected are 600 ohms and 4000 ohms respectively. If load capacitor is 1000pF, find the front and tail times of the impulse wave produced. **[9]**

OR

Q4) a) Give the Marx circuit arrangement for multistage impulse generator. How is the basic arrangement modified to accommodate the wave time control resistance? **[9]**

b) What is the principle of operation of a resonant transformer? List advantages over the cascade connected transformer. **[9]**

P.T.O.

Q5) a) Explain the generating voltmeter used for measuring high dc voltages. **[8]**

b) With a neat diagram explain capacitive voltage transformer. How it can be used for voltage measurement in power system? **[9]**

OR

Q6) a) Describe Electro-optical signal converter for EHV system. **[8]**

b) Explain how a sphere gap can be used to measure the peak value of voltages. What are factors that influence such voltage measurement? **[9]**

Q7) a) Discuss following tests carried out on porcelain insulator: **[9]**

i) 50% Dry impulse flashover test

ii) Impulse withstand test

b) Write a short note on Design, layout and grounding of HV laboratory. **[9]**

OR

Q8) a) Describe earthing and shielding of high voltage laboratories. **[9]**

b) Describe for bushing **[9]**

i) Wet power frequency voltage withstand test

ii) Momentary power frequency voltage withstand test.

iii) Visible discharge test.

Total No. of Questions : 8]

SEAT No. :

PB2271

[Total No. of Pages : 2

[6263]-109
B.E. (Electrical Engineering)
ROBOTICS AND AUTOMATION
(2019 Pattern) (Semester - VII) (Elective - III) (403143 D)

Time : 2½ Hours] *[Max. Marks : 70*

Instructions to the candidates:

1) ***Solve Q.1 or Q.2, Q.3 or Q.4, Q.5 or Q.6, Q.7 or Q.8.***
2) ***Figures to the right indicate full marks.***
3) ***Neat diagrams must be drawn wherever necessary.***
4) ***Assume suitable data, if necessary.***
5) ***Use of non-progammable calculator is allowed.***

Q1) a) Define the terms: **[4]**

i) Orthonormal coordinate:

ii) Coordinate transformation;

iii) Inverse coordinate transformation;

iv) Orthogonality

b) Draw and explain the link coordinate diagram of four axis SCARA robot. **[6]**

c) Write the algorithm for Denavit - Hartenberg representation. **[8]**

OR

Q2) a) Explain the rules for establishing the link coordinate frames. **[4]**

b) State and explain inverse kinematics problem. **[6]**

c) Explain general properties of solution i.e. existence of solution and uniqueness of solution. **[8]**

Q3) a) Explain different classes of sensors and enlist two examples of each. **[3]**

b) Write a short note on photoelectric sensors. **[6]**

c) Explain the construction and working of safety light curtain sensors. **[8]**

OR

Q4) a) What is the importance of the sensors in robotics? Explain with any application. **[3]**

b) What are position sensors? How position sensors are used in Robotics. Enlist the different types of position sensors used in robotics. **[6]**

c) Explain the construction and working of LVDT along with its schematic diagram. **[8]**

P.T.O.

Q5) a) Explain the concept of linear and angular velocity, and write the relationship between transformation matrix and angular velocity. **[4]**

b) Explain the concept of manipulator Jacobian, Jacobian inverse in brief. **[6]**

c) Explain Jacobian matrix for prismatic and revolute joint. **[8]**

OR

Q6) a) Explain the trapezoidal velocity profile for robotic arm position control. **[4]**

b) Explain Resolved Motion Position Control (RMPC) with the help of a neat sketch. **[6]**

c) Explain the modelling of the D.C. motor with load with relevant equations and diagrams. **[8]**

Q7) a) Explain how robots are used in material handling, picking, and packaging. **[3]**

b) Explain the spray-painting robot in detail. **[6]**

c) Explain different fields of robot applications and explain in detail in case of Arc welding. **[8]**

OR

Q8) a) Explain the selection criteria of the robot for industrial applications. **[3]**

b) Explain how robots are used in home automation. **[6]**

c) Explain how robots are used in the defence and surveillance industry. **[8]**

Total No. of Questions : 8]

SEAT No. :

PB-2272

[Total No. of Pages : 2

[6263]-110

B.E. (Electrical Engineering)

ALTERNATE ENERGY SYSTEM

(2019 Pattern) (Semester - VII) (403144A) (Elective - IV)

Time : 2½ Hours] *[Max. Marks : 70*

Instructions to the candidates:

1) ***Solve Q1 or Q2, Q3 or Q4, Q5 or Q6, Q7 or Q8.***
2) ***Figures to the right indicate full marks.***
3) ***Neat diagrams must be drawn wherever necessary.***
4) ***Assume suitable additional data, if necessary.***
5) ***Use of non-programmable calculator is allowed.***

Q1) a) Derive expression for maximum power that can be extracted from wind. **[8]**

b) List the components of wind electric systems. Describe each component in brief. **[10]**

OR

Q2) a) Define : **[8]**

i) Yaw Control

ii) Pitch Control

iii) Power Coefficient

iv) Pitch angle

b) Find the diameter of a wind turbine to generate 4 KW at wind speed of 7m/s and a rotor speed of 120 rpm. Assume power coefficient = 0.4, efficiency of electrical transmission = 0.95, efficiency mechanical transmission = 0.9, Air density (at standard atm pressure and temp) = 1.225 kg/m^3. **[10]**

Q3) a) What are the various types of biomass conversion processes? Explain any one in detail. **[9]**

b) Explain the process of power generation from municipal waste, with block diagram. **[9]**

P.T.O.

OR

Q4) a) What do you think about the biogas as a future fuel, What are the various factors that affects biogas generation. **[9]**

b) Explain any one gasifier in detail with neat diagram. **[9]**

Q5) a) What are important factors for choice of type of battery? **[9]**

b) Explain the working principle of battery, describe lead- acid battery with diagram. **[9]**

OR

Q6) a) Describe pumped hydroelectric storage with diagram. **[9]**

b) State various methods of hydrogen production. Describe any one method with a diagram. **[9]**

Q7) a) Draw a neat diagram of renewable energy source connected to the grid. State various parameters required for synchronisation of renewable energy source with grid. **[8]**

b) What is mean by Time value of money? Why it should be considered? What is Net Present Value (NPV) **[8]**

OR

Q8) a) Define and Explain with example. **[8]**

i) Simple payback period.

ii) Return on investment.

iii) Net present value

iv) Time Value of Money

b) A person wants to purchase a solar water heating system of Rs 30000, It is required to do a down payment of Rs. 5000. An annual end of year payment of Rs. 3400 is required for 10 years. However, the person elects to pay 3200, yearly and a balance payment at the end. Determine the value of balanced payment if money is worth 10% interest. **[8]**

Total No. of Questions : 8]

SEAT No. :

PB-2273

[Total No. of Pages : 2

[6263]-111
B.E. (Electrical)
ELECTRIC AND HYBRID VEHICLE
(2019 Pattern) (Semester - VII) (403144B) (Elective - IV)

Time : 2½ Hours] *[Max. Marks : 70*

Instructions to the candidates:

1) ***Solve Ques. 1 or Ques. 2, Ques. 3 or Ques. 4, Ques. 5 or Ques. 6, Ques. 7 or Ques. 8.***
2) ***Draw neat diagrams wherever necessary.***
3) ***Assume suitable data, if necessary.***

Q1) a) Draw & explain the EV subsystem. **[8]**

b) Explain the concept of electric bus and state its challenges for adoption. **[6]**

c) Mention the advantages and disadvantages of fuel cell vehicles. **[4]**

OR

Q2) a) Explain the mechanism of a fuel cell electric vehicles drive train. **[7]**

b) List and describe the various sensors applicable to electric vehicles. **[6]**

c) Write a short note on EV Fleet Management system. **[5]**

Q3) a) What is called as hybridization of energy sources in EV's explain it with suitable diagram. **[7]**

b) Write a short note on fuel efficiency analysis for an PHEV. **[5]**

c) Draw and explain series HEV configuration. **[5]**

OR

Q4) a) Write a short note on vehicle dynamics. **[5]**

b) State different drivetrains configuration in HEVs and explain Hybridization of any one in detail. **[6]**

c) Why power management is crucial for HEV? Explain any one strategy for the same. **[6]**

P.T.O.

Q5) a) State the criteria for battery selection in EV. **[5]**

b) Mention important considerations for battery pack design. **[6]**

c) Draw and explain PMSM motor control for an EV application. **[7]**

OR

Q6) a) Which are various forces to be consider for EV design? Write equations for power calculation. **[7]**

b) How to select size of EV motor? Which are the factors considered for the same? **[6]**

c) Write a short note on CAN vehicle network. **[5]**

Q7) a) Explain revised guidelines and standards for charging infrastructure? **[7]**

b) What is star labelling of BEE? Why it is necessary for battery pack? **[6]**

c) List any two Li-ion recycling policy and standards. **[4]**

OR

Q8) a) Explain EV tariff rate considerations declare by government for EV charging. **[6]**

b) State important highlights about FAME-II policy. **[6]**

c) What is start up? Mention any one EV startup in detail. **[5]**

Total No. of Questions : 8]

SEAT No. :

PB-4476

[Total No. of Pages : 2

[6263]-112R

B.E. (Electrical Engineering)

SPECIAL PURPOSE MACHINES

(2019 Pattern) (Semester - VII) (403144C) (Elective - IV)

Time : 2½ Hours] *[Max. Marks : 70*

Instructions to the candidates:

1) ***Solve Q1 or Q2, Q3 or Q4, Q5 or Q6 and Q7 and Q8.***
2) ***Neat diagrams must be drawn wherever necessary.***
3) ***Figures to the right side indicate full marks.***
4) ***Use of Calculator is allowed.***

Q1) a) Write the applications of permanent magnet synchronous motor. **[8]**

b) Explain the vector control of PMSM. Also plot the vector control scheme for the PMSM. **[9]**

OR

Q2) a) Derive the emf equation for PMSM. **[8]**

b) With the block diagram, explain the microprocessor based control scheme for the PMSM. **[9]**

Q3) a) Explain the construction and principle of operation of Switched Reluctance motor. **[9]**

b) Write the applications of Synchronous Reluctance Motor. **[9]**

OR

Q4) a) Draw and explain the commutation scheme for the Switched Reluctance motor. **[9]**

b) Plot the phasor diagram Synchronous Reluctance motor and also derive torque-angle equation for the SyRM. **[9]**

P.T.O.

Q5) a) With the block diagram explain the control scheme for SRM. **[9]**

b) Explain in detail the Static and dynamics characteristics of stepper motor. **[9]**

OR

Q6) a) Derive the equation for the torque developed for Variable Reluctance Stepper Motor. **[9]**

b) List the advantages and disadvantages of variable reluctance (VR) stepper motor. **[9]**

Q7) a) Derive the thrust equation for LIM. **[8]**

b) Write the advantages of linear induction motors over rotating induction motor. **[9]**

OR

Q8) a) Explain the constructional details of linear induction motors. **[8]**

b) Explain the factors to be considered while selecting the specific magnetic loading and specific electric loading in the design of LIM. **[9]**

Total No. of Questions : 8]

SEAT No. :

PB-2275

[Total No. of Pages : 2

[6263]-113
B.E. (Electrical)
HVDC & FACTS
(2019 Pattern) (Semester - VII) (403144 D) (Elective - IV)

Time : 2½ Hours] *[Max. Marks : 70*

Instructions to the candidates:

1) ***Solve Q1 or Q2, Q3 or Q4, Q5 or Q6 and Q7 or Q8.***
2) ***Neat diagrams must be drawn wherever necessary.***
3) ***Figures to the right side indicate full marks.***
4) ***Use of logarithmic tables slide rule, Mollier charts, electronic pocket calculator and steam tables is allowed.***
5) ***Assume suitable data, if necessary.***

Q1) a) What are the differences between HVDC Light and HVDC Plus? **[8]**

b) Who active and reactive power can be controlled by VSC? Explain in detail with suitable diagrams. **[10]**

OR

Q2) a) State the applications of VSC based HVDC systems. Explain any two in detailed. **[9]**

b) With suitable diagrams explain operation of VSC based HVDC systems. **[9]**

Q3) a) Explain AC Controller structures. **[8]**

b) Explain philosophy of active and reactive power control in power system by using power converters. **[9]**

OR

Q4) a) Explain converter control schemes for controlling output of converters and harmonic generation. **[8]**

b) Discuss the need of power electronic converters in power network. What are the different challenges faced by power electronic controllers deployed in power network? **[9]**

P.T.O.

Q5) a) Explain Principle of operation, TCSC. Explain different modes also. **[10]**

b) With suitable examples explain role of STATCOM in power system. **[8]**

OR

Q6) a) With schematic diagram explain construction and operation of STATCOM. Also explain VI Characteristics of STATCOM. **[10]**

b) V-I Characteristics and control schemes of SVC. **[8]**

Q7) a) Explain different operating modes of UPFC by using generalised power flow controllers. **[9]**

b) With detailed diagram explain internal control structure of UPFC. **[8]**

OR

Q8) a) Explain with diagram construction and operation of Interline Power Flow Controller. **[9]**

b) What are the different operating constraints of UPFC? **[8]**

Total No. of Questions : 8]

SEAT No. :

PB2276

[Total No. of Pages : 2

[6263]-114

B.E. (Electrical Engineering)

SWITCHGEAR & PROTECTION

(2019 Pattern) (Semester - VIII) (403148)

Time : 2½ Hours] *[Max. Marks : 70*

Instructions to the candidates:

1) ***Solve Q1 or Q2, Q3 or Q4, Q5 or Q6, Q7 or Q8.***
2) ***Figures to the right indicate full marks.***
3) ***Neat diagrams must be drawn wherever necessary.***
4) ***Assume suitable additional data, if necessary.***
5) ***Use of non - programmable calculator is allowed.***

Q1) a) Explain the following terms with respect to circuit breaker. **[4]**

i) Breaking capacity

ii) Making capacity

b) What is Auto Reclosing? Discuss single shot and multi shot auto reclosing of circuit breakers. **[6]**

c) Draw neat diagram and explain the construction and working principle of vacuum circuit breaker? **[8]**

OR

Q2) a) A 3 phase VCB is rated as 1500 A, 2000 MVA, 33kV, 1 seconds. Determine - **[4]**

i) Symmetrical breaking current

ii) Rated making current

iii) Short time current

iv) Rated normal current

b) State the advantages & disadvantages of GIS. **[6]**

c) Explain physical, chemical & dielectric properties of SF6 gas which makes it to use as arc interrupting medium in SF6 CB? **[8]**

Q3) a) With neat block diagram explain working of Numerical relay. Also state its advantages over static & conventional relay. **[10]**

b) Draw and explain the block diagram of PMU. **[7]**

OR

P.T.O.

Q4) a) With neat block diagram explain working of Static relays. Also state its advantages and disadvantages. **[10]**

b) State and explain the sampling theorem. Explain use of anti - aliasing filter in numerical relay. **[7]**

Q5) a) Explain the phenomenon of over fluxing in the transformer. Suggest the protection scheme used in this case. **[4]**

b) Explain with neat diagram single phase preventer in case of three phase induction motor. **[6]**

c) With neat diagram explain working of Buchholz relay. State its advantages & disadvantages. **[8]**

OR

Q6) a) Draw & explain the protection of 3 phase alternators against inter turn faults on same phase. **[4]**

b) Explain the abnormal conditions like **[6]**

i) Unbalance loading and

ii) loss of prime mover in case of alternator.

c) A three phase, 66kV/11kV, Delta-Star connected power transformer is protected by differential protection. The CTs on the LV side have a current ratio of 420/5. What must be the current ratios of CTs on the HV side? Draw a neat connection diagram of the scheme. **[8]**

Q7) a) What do you mean by under reach and over reach in case of distance relay? Compare impedance relay, reactance relay and mho relay on the basis of its characteristics on R-X plane, applications, effect of arc resistance. **[10]**

b) Explain the three stepped distance protection for transmission line with neat diagram. **[7]**

OR

Q8) a) Explain the effect of (i) power swings and (ii) arc resistance on the performance of the distance relay. Mention which relay gets highly affected in each case. **[10]**

b) Draw block diagram and explain components of power line carrier communication (PLCC) for long transmission lines. **[7]**



Total No. of Questions : 8]

SEAT No. :

PB2277

[Total No. of Pages : 2

[6263]-115
B.E. (Electrical Engineering)
ADVANCED ELECTRICAL DRIVES & CONTROL
(2019 Pattern) (Semester - VIII) (403149)

Time : 2½ Hours] *[Max. Marks : 70*

Instructions to the candidates:

1) ***Solve Q.1 or Q.2, Q.3 or Q.4, Q.5 or Q.6, Q.7 or Q.8.***
2) ***Figures to the right indicate full marks.***
3) ***Neat diagrams must be drawn wherever necessary.***
4) ***Assume suitable additional data, if necessary.***
5) ***Use of non-programmable calculator is allowed.***

Q1) a) List braking methods for induction motor and explain regenerative braking. **[4]**

b) What is difference between CSI and VSI drives? **[6]**

c) Discuss VSI fed induction motor drive and write drawbacks of Inverter fed induction motor drives. **[8]**

OR

Q2) a) What is electrical braking? Explain plugging for induction motor. **[4]**

b) Explain principle of vector control for induction motor. **[6]**

c) Explain regenerative braking and multi quadrant operation of Induction motor drives. **[8]**

Q3) a) With neat diagram explain motoring and regenerative braking of BLDC Motor. **[8]**

b) Write advantages of vector control method and explain vector control of BLDC motor with necessary diagram. **[9]**

OR

Q4) a) With neat diagram explain close loop control of BLDC motor. **[8]**

b) Describe the construction and working of BLDC Motor and also draw speed-torque characteristics. **[9]**

Q5) a) With the help of block diagram explain vector control of PM synchronous motor. **[9]**

b) Draw construction and explain operating principle of PM synchronous motor. **[9]**

OR

P.T.O.

Q6) a) Write advantages of synchronous reluctance motor (SRM). **[4]**

b) Compare BLDC motor with PMSM motor. **[6]**

c) Describe the construction and working of synchronous reluctance motor. **[8]**

Q7) a) Explain continuous motor duty with diagram. **[3]**

b) Explain specific requirements and choice of drives for Sugar mills. **[6]**

c) Explain requirements of motor drive for traction applications. **[8]**

OR

Q8) a) Write a brief note on Thermal model for heating and cooling. **[8]**

b) Explain various requirements and choice of drive for EV applications. Also explain basic operations of drive. **[9]**

◀▶ ◀▶ ◀▶

Total No. of Questions: 8]

SEAT No. :

PB2278

[Total No. of Pages :2

[6263]-116
B.E. (Electrical)
DIGITAL CONTROL SYSTEM
(2019 Pattern) (Semester-VIII) (403150 A) (Elective-V)

Time : 2½ Hours] ***[Max. Marks : 70***

Instructions to the candidates:

1) ***Attempt questions Q.1 or Q.2, Q.3 or Q.4, Q5 or Q6, Q7 or Q8.***
2) ***Figurs to the right indicate full marks.***

Q1) a) Explain the tests for determining controllability and observability of Discrete data control system. **[8]**

b) Give three different canonical state variable models corresponding to following Pulse transfer function $G(z)=\dfrac{4z^3-12z^2+13z+7}{(z-1)^2(z-2)}$ **[9]**

OR

Q2) a) Write a note on state regulator design. **[8]**

b) Design a full state observer for the system having. **[9]**

$$G=\begin{pmatrix}0 & 20.6\\ 1 & 0\end{pmatrix};H=\begin{pmatrix}1\\ 0\end{pmatrix};C=\begin{pmatrix}0\,1\end{pmatrix}$$

Desired Eigen values of observer matrix are Z= –1.8+j2.4, Z= –1.8–j2.4.

Q3) a) Summarize different methods for determination of observer feedback gain Matrix (k_e). **[8]**

b) Find the response of the system $y(k)$, if state equation of system is **[10]**

$$x(k+1)=\begin{bmatrix}1 & 1\\ 0 & -1\end{bmatrix}x(k)+\begin{bmatrix}0\\ 1\end{bmatrix}u(k) \text{ and } x(0)=\begin{bmatrix}1\\ -1\end{bmatrix}u(k)=1;k=0,1,2,3,.....$$

OR

P.T.O.

Q4) a) Explain Compensator design by the separation principle **[9]**

b) Consider system defined by **[9]**

$$x(k+1)=\begin{bmatrix} 0 & 1 & 0 \\ 0 & 0 & 1 \\ -0.5 & -0.2 & 1.1 \end{bmatrix} x(k)+\begin{bmatrix} 0 \\ 0 \\ 1 \end{bmatrix} u(k)$$

Determine state feedback gain k such that closed loop system will exhibit the deadbeat response.

Q5) a) Explain Euler's forward, backward method and trapezoidal method with Example. **[8]**

b) Find Eigen Values and Eigen Vectors for **[9]**

$$G=\begin{bmatrix} 0 & 1 & 0 \\ 3 & 0 & 2 \\ -12 & -7 & -6 \end{bmatrix}$$

OR

Q6) Explain the following methods for discretizing analog controllers. **[17]**

a) Euler's backward method

b) Euler's forward method

c) Trapezoidal method

Q7) Explain the following digital control system applications: **[18]**

a) Digital temperature control

b) Digital position control

OR

Q8) a) Explain stepper motor control with block diagram and algorithm. **[9]**

b) Explain computer program structure for simulation for simulation of discrete time control of continuous time plant. **[9]**



Total No. of Questions : 8]

SEAT No. :

PB2279

[Total No. of Pages : 2

[6263]-117
B.E. (Electrical Engineering)
RESTRUCTURING & DEREGULATION
(2019 Pattern) (Semester-VIII) (Elective-V) (403150 B)

Time : 2½ Hours] *[Max. Marks : 70*

Instructions to the candidates:

1) ***Solve Q.1 or Q.2, Q.3 or Q.4, Q.5 or Q.6, Q.7 or Q.8.***
2) ***Neat, diagrams must be drawn wherever necessary.***
3) ***Figures to the right indicates full marks.***
4) ***Use of Calculator is allowed.***
5) ***Assume Suitable data if necessary.***

Q1) a) Describe the various stages in determination of tariff for integrated utility. **[9]**

b) Write note on Considerations of socio economic aspects in regulation. **[8]**

OR

Q2) a) Explain the objectives of "Electricity Act 2010". Also explain the guidelines under this act. **[9]**

b) Describe in detail the regulatory process in India. **[8]**

Q3) a) Explain the following in detail. **[9]**

i) Models based on contractual arrangements.

ii) Pool and bilateral trades.

iii) Multilateral trades.

b) Explain the following ISO models in detail. **[9]**

i) Mini ISO

ii) Micro ISO

iii) Max ISO

OR

Q4) a) Explain the following in detail. **[9]**

i) Models based on energy trading or structural models.

ii) Wholesale competition.

iii) Retail competition.

b) Explain the following : **[9]**

i) Renewable Energy Credits and Trading of Renewable Energy Credits.

ii) Carbon Credits and Trading of carbon Credits.

P.T.O.

Q5) a) What are the rules that govern electricity markets? Specify the peculiarities of electricity as commodity. **[9]**

b) Explain the following terms in context to electricity markets: **[8]**

i) Market power mitigation.

ii) Effects of contract for differences.

OR

Q6) a) Explain the following terms: **[9]**

i) Market Clearing price.

ii) Market Power.

iii) Market Efficiency.

b) Explain in detail. **[8]**

i) Forward contracts and forward markets.

ii) Future contracts and future markets.

Q7) a) What do you understand by congestion in power network? Give the reasons for congestion in power network. **[9]**

b) Define and explain. **[9]**

i) Total transfer capability (TTC)

ii) Available transfer capability (ATC)

iii) Transmission Reliability Margin (TRM)

OR

Q8) a) Name the different transmission pricing methods and explain any two in detail. **[9]**

b) State and explain major components of transmission costs. **[9]**



Total No. of Questions : 8]

SEAT No. :

PB-4465

[Total No. of Pages : 2

[6263]-118R

B.E. (Electrical)

SMART GRID

(2019 Pattern) (Semester - VIII) (403150C) (Elective - V)

Time : 2½ Hours] ***[Max. Marks : 70***

Instructions to the candidates:

1) ***Solve question Q.1 or Q.2, Q.3 or Q.4, Q.5 or Q.6, Q.7 or Q.8.***
2) ***Figures to the right indicate full marks.***
3) ***Assume the suitable data, if necessary.***

Q1) a) What is outage management system? Explain how it will work in smart grid? **[9]**

b) Write a note on "Smart Substation". **[9]**

OR

Q2) a) State and explain briefly the components of Geographic Information System (GIS). **[9]**

b) Write a short note on "Real Time Pricing". **[9]**

Q3) a) Why cyber security is having prime importance in Smart Grid? Discuss how it can be achieved. **[9]**

b) Explain cloud computing and its need. **[8]**

OR

Q4) a) Write a short note on Wi-Max based communication. **[9]**

b) Explain the concept of Home Area Network (HAN) in smart grid. **[8]**

Q5) a) Discuss different issues of microgrid when interconnected with renewable sources. **[9]**

b) Explain structure of DC Microgrid. **[9]**

OR

P.T.O.

Q6) a) Explain the need of Microgrid concept and application. **[9]**

b) Explain protection and control of Microgrid. **[9]**

Q7) a) Describe Power Quality issues of grid connected renewable energy. **[9]**

b) Explain Electromagnetic compatibility (EMC) and its important in smart grid. **[8]**

OR

Q8) a) Explain Distributed Generation and its need in Smart Grid. **[9]**

b) Explain how smart applications can help in home and building automation. **[8]**

⌘⌘⌘

Total No. of Questions: 8]

SEAT No. : ____

PB2281

[Total No. of Pages :2

[6263]-119
B.E. (Electrical)
SENSOR TECHNOLOGY
(2019 Pattern) (Semester-VIII) (403150D) (Elective-V) (Open Elective)

Time : 2½ Hours] ***[Max. Marks : 70***

Instructions to the candidates:

1) ***Answer Q.1 or Q.2, Q.3 or Q.4, Q5 or Q6, Q7 or Q8.***
2) ***Neat diagrams must be drawn wherever necessary.***
3) ***Figures to the right indicate full marks.***
4) ***Assume suitable data, if necessary.***

Q1) a) With the help of neat diagram explain Near Infrared spectroscopy. **[9]**

b) With the help of neat diagram explain 3D Depth sensor. **[9]**

OR

Q2) a) Write short on "Light and Image sensing devices". **[9]**

b) With the help of neat diagram explain OPT3007 light sensor. **[9]**

Q3) a) With the help of functional block diagram explain the HDC2010 humidity sensor. **[8]**

b) With the help of neat diagram Explain DRV5053 Hall effect based current sensor. **[9]**

OR

Q4) a) What is the principle of operation of LM35? Explain with neat diagram. **[8]**

b) Explain INA 240 current sense amplifier. **[9]**

Q5) a) State and explain different position sensing methods for absolute and relative positions. **[8]**

b) What are the different types of Encoders? Explain any one in detail. **[9]**

OR

P.T.O.

Q6) a) Write short note on Inductive position sensors. **[8]**

b) Explain with neat diagram Linear Variable Differential Transducer. **[9]**

Q7) a) What is GPS? Explain with neat diagram. **[9]**

b) Explain Touch Screen sensors. **[9]**

OR

Q8) a) Explain MEMS and NANO sensors. **[9]**

b) Write short note on "compass gyroscope inclinometer". **[9]**



Total No. of Questions : 8]

SEAT No. :

PB-2282

[Total No. of Pages : 2

[6263]-120

B.E. (Electrical)

EHV AC TRANSMISSION

(2019 Pattern) (Semester - VIII) (403151A) (Elective-VI)

Time : 2½ Hours] *[Max. Marks : 70*

Instructions to the candidates:

1) ***Answer all questions.***
2) ***Answer Q.1 or Q.2, Q.3 or Q.4, Q.5 or Q.6, Q.7 or Q.8.***
3) ***Neat diagrams must be drawn whenever necessary.***
4) ***Figures to the right indicate full marks.***
5) ***Assume suitable data, if necessary.***
6) ***Use of calculator is allowed.***

Q1) a) Explain Electrostatic Field of a point charge and its properties. **[9]**

b) Explain Field of line charges and their properties & charge potential relations for multi-conductor lines. **[9]**

OR

Q2) a) Explain design of cylindrical cage for corona gradients. **[9]**

b) Explain Electric shock and threshold currents **[9]**

Q3) a) Evaluate the horizontal, vertical and total value of electrostatic field components near the single circuit transmission line, which are energized by three phase voltages. **[10]**

b) Derive expression for electrostatic induction on un energized circuit of double circuit line. **[8]**

OR

Q4) a) Derive the expression for magnetic field calculation of horizontal configuration of Single circuit of three phase lines. **[10]**

b) Discuss effect of high electrostatic field on: **[8]**

i) Humans

ii) Animals

P.T.O.

Q5) a) Explain formation of corona & define terms **[8]**

i) Corona inception voltage.

ii) Visual corona voltage.

b) Explain the corona formation and attenuation of travelling waves due to corona loss. **[9]**

OR

Q6) a) With the help of simple block diagram, explain the audible noise measuring circuit in EHV AC lines. **[9]**

b) State and explain at least 4 formulae for power loss due to corona. **[8]**

Q7) a) Brief, the line insulation design based upon transient over voltages. **[5]**

b) Define tan delta loss factor and derive an expression for insulation resistance of a cable. **[6]**

c) Name the materials used for insulation in EHV cables and state the properties of SF6 gas as an insulating materials used in cables. **[6]**

OR

Q8) a) Write note on various properties of XLPE used in EHV cables. **[5]**

b) Explain detail classification of cables and mention typical insulation thickness for EHV cables. **[6]**

c) State and explain at least four factors to be considered in the design of EHV lines based upon the steady state limits. Also state their limiting value. **[6]**

⌘⌘⌘

Total No. of Questions : 8]

SEAT No. :

PB-2283

[Total No. of Pages : 2

[6263]-121

B.E. (Electrical Engineering)

ILLUMINATION ENGINEERING

(2019 Pattern) (Semester - VIII) (403151B) (Elective-VI)

Time : 2½ Hours] *[Max. Marks : 70*

Instructions to the candidates:

1) ***Solve Q.1 or Q.2, Q.3 or Q.4, Q.5 or Q.6, Q.7 or Q.8.***
2) ***Figures to the right side indicate full marks.***
3) ***Neat diagrams must be drawn wherever necessary.***
4) ***Assume Suitable additional data if necessary.***
5) ***Use of non-programmable calculator is allowed.***

Q1) a) What is Polar Curve? Describe its types. **[4]**

b) State the feature of good illumination scheme. **[6]**

c) What different components of flux are considered in zonal cavity method? Explain in detail. **[8]**

OR

Q2) a) Write short notes on cavity ratio. **[4]**

b) What are the different Lighting systems for Residential illumination. Explain in detail. **[6]**

c) Explain zonal cavity method for indoor lighting design. **[8]**

Q3) a) Define following terms **[3]**

i) Beam factor

ii) Maintenance factor

iii) Lux

b) Write short note on LFF (Light Loss Factor). **[6]**

c) A light source of 1000 watts having MSCP =2500 is suspended 3 meters above the working plane. Find the following: **[8]**

i) Illumination in Lux directly below the lamp on working plane.

ii) Lamp efficiency in Lumens/watt.

iii) Illumination 3meter away on the horizontal plane from vertically below the lamp.

OR

P.T.O.

Q4) a) Define following terms **[3]**

i) Reflection factor

ii) Utilisation factor

iii) Glare

b) Find MSCP and Luminous intensity in lumens per watt and MSCP per watt of a 250 volts lamp which takes a current of 0.4 Amp and has total flux of 1500 Lumens. **[6]**

c) Explain in details the factors to be consider for design of illumination scheme for Educational installation. **[8]**

Q5) a) State and Explain Road classification as per BIS. **[4]**

b) Draw and explain the constructional part of LED. **[6]**

c) Explain in details the factors to be consider for design of illumination scheme for indoor installation -Hospital. **[8]**

OR

Q6) a) Explain special purpose lighting scheme for swimming pool lighting. **[4]**

b) Explain in details the factors to be consider for design of illumination scheme for outdoor lighting schemes. **[6]**

c) Explain in details the factors to be consider for design of illumination scheme for Theatre installation. **[8]**

Q7) a) Write short note on street lighting. **[3]**

b) With suitable diagram explain any two methods of natural light conducting. **[6]**

c) Explain working of OLED with suitable diagram and state its advantage. **[8]**

OR

Q8) a) Compare between LED and LASER. **[3]**

b) With suitable diagram explain different fibre optic guide. **[6]**

c) What are the objectives of road lighting? Give the details of road lighting codes in India. **[8]**

⌘⌘⌘

Total No. of Questions : 8]

SEAT No. :

PB-2284

[Total No. of Pages : 2

[6263]-122

B.E. (Electrical Engineering)

ELECTROMAGNETIC FIELDS

(2019 Pattern) (Semester - VIII) (403151C) (Elective-VI)

Time : 2½ Hours] *[Max. Marks : 70*

Instructions to the candidates:

1) ***Answer Q.1 or Q.2, Q.3 or Q.4, Q.5 or Q.6, Q.7 or Q.8.***
2) ***Figures to the right side indicate full marks.***
3) ***Neat diagrams must be drawn wherever necessary.***
4) ***Assume suitable additional data, if necessary.***
5) ***Use of non-programmable calculator is allowed.***

Q1) a) Explain about Convection and Conduction currents. **[4]**

b) Derive the expression for Capacitors with multiple dielectrics. **[6]**

c) Derive the expression for Electric field due to dipole. **[8]**

OR

Q2) a) Write about Energy density in electrostatic field. **[4]**

b) Derive the expression for Energy stored in terms of D and E. **[6]**

c) Derive the expression for Parallel plate capacitor. **[8]**

Q3) a) Explain the terms: Magnetic flux density, Magnetic field intensity (MFI). **[3]**

b) Derivations of Biot-Savart's law based on magnetic potential. **[6]**

c) Poisson's Equations for Magnetostatic field. **[8]**

OR

Q4) a) Explain the terms: Magnetic permeability, Biot-Savart's law. **[3]**

b) Applications of Biot-Savart's law. **[6]**

c) Derivations of Ampere's law based on magnetic potential. **[8]**

P.T.O.

Q5) a) Explain the terms Ohm's law employing mobility and Relaxation time. **[4]**

b) Brief about Polarization in Dielectrics. **[6]**

c) Explain the Dielectric boundary conditions. **[8]**

OR

Q6) a) Write the Free space boundary conditions. **[4]**

b) Brief about Dielectric constants and strength. **[6]**

c) Explain the Boundary conditions for Magnetostatic fields. **[8]**

Q7) a) Explain Transformer and motional EMFs. **[3]**

b) Derive the expression for moving loop in static B field. **[6]**

c) Write in detail about Concept of uniform plane wave. **[8]**

OR

Q8) a) Explain Faraday's law. **[3]**

b) Derive the expression for moving loop in time varying field. **[6]**

c) Derive the Maxwell's equations in point form and integral form for harmonic field. **[8]**

⌘⌘⌘

Total No. of Questions : 8]

SEAT No. :

PB2285

[Total No. of Pages :2

[6263]-123
B.E. (Electrical)
ARTIFICIAL INTELLIGENCE AND MACHINE LEARNING
(2019 Pattern) (Semester-VIII) (Open Elective-VI) (403151D)

Time : 2½ Hours] *[Max. Marks : 70*

Instructions to the candidates:

1) ***Answer Q.1 or Q.2, Q.3 or Q.4, Q.5 or Q.6, Q.7 or Q.8.***
2) ***Neat diagrams must be drawn wherever necessary.***
3) ***Figures to the right indicates full marks.***
4) ***Assume suitable data, if necessary.***

Q1) a) What is reasoning under uncertainty? What are the 3 techniques in uncertainty reasoning? **[4]**

b) What is a theorem of first-order logic? **[6]**

c) What is a partial-order plan? Which planning is also known as partial order planning? What is total order and partial order planning? **[8]**

OR

Q2) a) Why is it important to build a knowledge base? What is knowledge base and examples? **[4]**

b) Discuss the limitations of first-order logic in representing uncertainty and incomplete information. **[6]**

c) Explain the concept of Hidden Markov Models (HMMs) and their application in modeling temporal uncertainty. **[8]**

Q3) a) What is an examples of a multiclass classification? What is locally linear embedding? **[4]**

b) Provide examples of hypothesis classes with low and high VC dimensions. **[6]**

c) What is principal component analysis explain with an example? **[7]**

OR

Q4) a) Provide and example of a real-world application where learning a class from examples is used. **[4]**

b) What is supervised learning vs unsupervised learning? What is an example of supervised learning a class? **[6]**

c) Define the concept of Probably Approximately Correct (PAC) learning and its goals. **[7]**

P.T.O.

Q5) a) What is a partial least square analysis? What is the difference between subset selection and shrinkage methods? **[4]**

b) What is least square multiple regression model? **[6]**

c) What is logistic regression and its example? Which method gives the best fit for logistic regression model? **[8]**

OR

Q6) a) Define shrinkage methods in the context of linear regression. **[4]**

b) Describe the lasso regression method and its ability to perform variable selection. **[6]**

c) How does the concept of decision boundaries apply to logistic regression? **[8]**

Q7) a) What is the k-means algorithm for clustering? **[4]**

b) What is the difference between soft K -means and Gaussian mixture model? **[6]**

c) What is a cluster analysis example? Wha is the use of proximity matrix? **[7]**

OR

Q8) a) Explain the concept of association rules and their significance in market basket analysis. **[4]**

b) Explain the concept of temporal difference (TD) learning in reinforcement learning. **[6]**

c) What are the 5 elements of reinforcement learning? What is Temporal Difference Learning? **[7]**

Total No. of Questions : 8]

SEAT No. : ____

PB2286

[Total No. of Pages : 2

[6263]-124
B.E. (E & TC)
RADIATION AND MICROWAVE THEORY
(2019 Pattern) (Semester - VII) (404181)

Time : 2½ Hours] ***[Max. Marks : 70***

Instructions to the candidates:

1) ***Answer Q. 1 or Q. 2, Q. 3 or Q. 4, Q. 5 or Q.6, Q. 7 or Q. 8.***
2) ***Neat diagrams must be drawn wherever necessary.***
3) ***Figures to the right carries full marks.***
4) ***Assume suitable data, if necessary.***

Q1) a) State the properties of S - matrix and derive S matrix for E plane Tee. **[6]**

b) With neat schematic diagram explain the operation of Gyrator. Also State S - matrix for it. **[6]**

c) A signal of power 40 mW is fed into the collinear ports of lossless H - Plane tee. Determine the powers in the remaining ports when other ports are terminated with matched impedance. **[6]**

OR

Q2) a) Draw and explain two - hole directional coupler with neat diagram. Also state its S - matrix. **[6]**

b) Explain in brief the working principle of an Isolator. **[6]**

c) An Isolator has an insertion loss of 0.5db and an isolation of 30 dB. Determine the Scatting matrix of the isolator if the isolated ports are perfectly matched to the junction. **[6]**

Q3) a) Explain the constrction of single Cavity klystron Tube. **[6]**

b) Explain the Cavity Magnetron with Hull cut off condition in detail. **[6]**

c) What are the limitation of conventional tubes at microwave frequencies? **[6]**

OR

Q4) a) Explain the phase focusing effect in cavity magnetron. **[6]**

b) Explain construction, operation of Two Cavity Klystron. **[6]**

c) Distinguish between TWTA and Klystron Tube. **[6]**

P.T.O.

Q5) a) Explain construction and working of PIN diode. **[6]**

b) Write a short note on IMPATT diode. **[6]**

c) Write the comparison between PN junction diode and Schottky diode. **[5]**

OR

Q6) a) Explain the working principle of Varactor diode. **[6]**

b) Explain construction and working of Schottky barrier diode. **[6]**

c) Explain Gunn effect using two valley theory. **[5]**

Q7) a) Explain the phase shift measurement using double minimum method at microwave frequency. **[6]**

b) Calculate the maximum range of a radar system which 3 cm with a peak pulse power of 600 kW if its antenna is 5 m^2, minimum detectable signal is 10^{-13} W and the radar cross sectional area of the target is $20m^2$ **[6]**

c) Write short note on effect of Microwave radiation on human. **[5]**

OR

Q8) a) Write a note on measurement of quality factor. **[6]**

b) Explain reflectometer method for measurement of impedance. **[6]**

c) Differentiate between Satellite and Terrestrial Communication System. **[5]**

❋ ❋ ❋

Total No. of Questions : 8]

SEAT No. : ____

PB2287

[Total No. of Pages : 2

[6263]-125

B.E. (Electronics and Telecommunication)

VLSI DESIGN AND TECHNOLOGY

(2019 Pattern) (Semester - VII) (404182)

Time : 2½ Hours] ***[Max. Marks : 70***

Instructions to the candidates:

1) ***Solve Q1 or Q2, Q3 or Q4, Q5 or Q6, Q7 or Q8.***
2) ***Assume suitable data, if necessary.***

Q1) a) Draw and explain the architecture of CPCD and compare between CPCD and FPGA. **[10]**

b) Write feature of FPGA in detail and write its applications. **[8]**

OR

Q2) a) Draw and explain CLB in detail. **[8]**

b) Draw and explain PLD design flow. **[10]**

Q3) a) Design cmos logic for $y = \bar{a}b + a\bar{b}$. **[8]**

b) What are the merits of transmission gate and design 2:1 multiplexer using transmission gate. **[9]**

OR

Q4) a) Write short note on Hot electron effect. **[6]**

b) Write short note on Power dissipation. **[6]**

c) Write short note on Body effect. **[5]**

Q5) a) Explain in detail lambda design rules in CMOS VLSI. **[9]**

b) Draw stick diagram for invester, NAND and NOR gate. **[9]**

OR

P.T.O.

Q6) a) Write short note on Electrical Rule Check. **[6]**

b) Write short note on Antenna Effect. **[6]**

c) Write short note on Cross talk and drain punch. **[6]**

Q7) a) What is the need of BIST? Explain typical BIST in detail. **[9]**

b) Write short note on **[8]**

i) JTAG

ii) Boundry scan

OR

Q8) a) Explain the need for design for testability? Explain stuck at 0 and stuck at 1 fault with example. **[9]**

b) Draw the TAP controller state diagram and explain. **[8]**

x x x

Total No. of Questions : 8]

SEAT No. :

PB-2288

[Total No. of Pages : 2

[6263]-126
B.E. (E & TC)
CLOUD COMPUTING
(2019 Pattern) (Semester - VII) (404183)

Time : 2½ Hours] ***[Max. Marks : 70***

Instructions to the candidates :

1) ***Answer Q.1 or Q.2, Q.3 or Q.4, Q.5 or Q.6, Q.7 or Q.8.***
2) ***Neat diagrams must be drawn wherever necessary.***
3) ***Figures to the right side indicate full marks.***
4) ***Assume suitable data, if necessary.***

Q1) a) Describe the concept of storage virtualization and explain its implementation methods. **[6]**

b) Explain Virtual Cluster and Resource Management. **[6]**

c) Discuss the disadvantages of Hardware Level Virtualization along with the solutions to overcome. **[6]**

OR

Q2) a) Explain Full and Para Virtualization with example. **[6]**

b) Describe different types of Virtualization. **[6]**

c) Define virtual cluster and compare it with physical cluster. **[6]**

Q3) a) Explain the design principles of Cloud Computing Architecture (COA). **[6]**

b) Draw and explain Cloud Computing Life Cycle. **[6]**

c) Explain any four types of threats and attacks on cloud specifying which security goal it affects. **[5]**

OR

Q4) a) Describe the top threats identified by Cloud Security Alliance (CSA). **[6]**

b) Enlist the types and explain the functions of firewall. **[6]**

c) Elaborate the implementation of CIA security model. **[5]**

P.T.O.

Q5) a) Explain Google App Engine application life cycle. **[6]**

b) Explain Amazon compute and storage services of AWS. **[6]**

c) Explain the different Cost Models in cloud computing. **[6]**

OR

Q6) a) Enlist the AWS load balancing services. Also Describe Elastic Load Balancer. **[6]**

b) Write short on Microsoft Azure. **[6]**

c) Explain different services provided by Google Cloud Platform. **[6]**

Q7) a) Describe in brief the following enabling technologies of IoT. **[6]**

i) WSN

ii) Big Data Analytics

b) Describe the working of distributed computing and its needs. **[6]**

c) Explain the benefits of Online Networking over Traditional Networking. **[5]**

OR

Q8) a) Define IoT and Explain its any two innovative applications. **[6]**

b) Differentiate between Distributed Computing and Cloud Computing. **[6]**

c) Explain the need for Professional Networking and its benefits. **[5]**

▽▽▽▽

Total No. of Questions : 8]

SEAT No. :

PB2289

[Total No. of Pages : 2

[6263]-127
B.E. (E & T.C/Electronics)
SPEECH PROCESSING
(2019 Pattern) (Semester - VII) (404184 A) (Elective - III)

Time : 2½ Hours] *[Max. Marks : 70*

Instructions to the candidates:

1) ***Attempt Q.1 or Q.2, Q.3 or Q.4, Q.5 or Q.6, Q.7 or Q.8.***
2) ***Neat diagrams must be drawn wherever necessary.***
3) ***Figures to the right indicate full marks.***
4) ***Make suitable assumptions wherever necessary.***
5) ***Use of Calculator is allowed.***

Q1) a) Explain Uniform and non uniform filter banks. **[9]**

b) What is MFCC? Explain the method to calculate MFCC using block diagram? **[9]**

OR

Q2) a) Explain Levinson-Durbin recursive algorithm for calculation of Predictor Coefficients? **[6]**

b) Compare mel scale and bark scale. **[4]**

c) Explain in detail estimation of format and pitch parameters using cepsturm. **[8]**

Q3) a) When will you require the use of a non-uniform quantizer? Can you avoid slope overload noise using a non-uniform quantizer? **[8]**

b) Explain Linear Prediction Based Vocoders. **[9]**

OR

Q4) a) Explain Sub-Band Coding of Speech. **[8]**

b) Explain forward and backward adaptive quantizer in detail. **[9]**

Q5) a) What is prosody in speech production? What is the importance of prosody in speech? **[9]**

b) Draw a block schematic for the training mode of a speech recognition system and explain its operation. **[9]**

OR

P.T.O.

Q6) a) Explain speech synthesis and Compare Speaker identification and Speaker verification. **[9]**

b) What is concatenative synthesis? State and explain sub types of concatenative synthesis. **[9]**

Q7) a) Explain Text to speech synthesis using support vector machine. **[9]**

b) Explain the following performance parameters:- **[8]**

i) True Positives

ii) True negatives

iii) False Positive

iv) False negatives

OR

Q8) a) Explain Recurrent Neural Network, State its advantages and disadvantages. **[9]**

b) Explain the following performance parameters:- **[8]**

i) Sensitivity

ii) Specificity

iii) Area under curve

iv) Receiver Operating Characteristics

Total No. of Questions : 8] **SEAT No. :**

PB2290 **[Total No. of Pages : 2**

[6263]-128
B.E. (Electronics and Telecommunication)
PLC, SCADA AND AUTOMATION
(2019 Pattern) (Semester - VII) (404184 B) (Elective - III)

Time : 2½ Hours] ***[Max. Marks : 70***

Instructions to the candidates:

1) ***Answer Q.1 or Q.2, Q.3 or Q.4, Q.5 or Q.6, Q.7 or Q.8.***
2) ***Neat diagrams must be drawn wherever necessary.***
3) ***Figures to the right side indicate full marks.***
4) ***Assume suitable data if necessary.***

Q1) a)

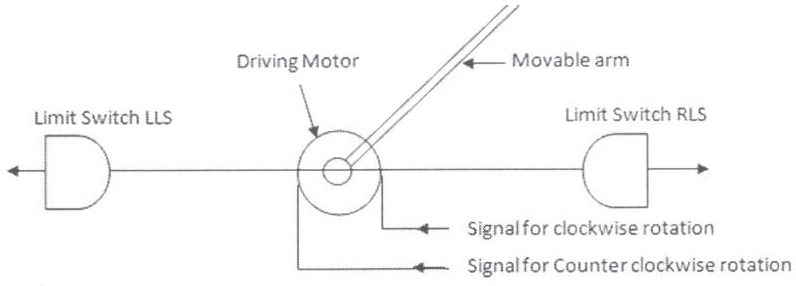

A bi-directional movable arm is shown in Fig. Develop a ladder diagram to control it as per the conditions mentioned.
Both the start and stop switches are push buttons. When the system is turned ON, the motor should rotate continuously, alternating between the counter clockwise and clockwise directions, as the movable arm touches two limit switches, RLS and LLS. **[7]**

The inputs are
Start Push Button I1
Stop Push Butto I2
Limit Switch LLS I3
Limit Switch RLS I4
The outputs are
Clock wise Rotation of Motor Y1
Counter Clock wise Rotation of Motor Y2

b) Draw the ladder diagram 4:1 MUX and 1:4 DEMUX. **[6]**

c) Explain NO/NC concept. **[5]**

OR

Q2) a) With suitable example explain the function of Timer in PLC. **[6]**

b) State the effect of the P, I & D action on system response? **[8]**

c) Draw the ladder diagram for the input AND & three input OR gate. **[4]**

P.T.O.

Q3) a) Draw and Explain Architecture of SCADA system. **[7]**

b) Compare PLC and SCADA. **[6]**

c) Explain functions of RTU. **[5]**

OR

Q4) a) With neat suitable diagram explain the use of SCADA in Industrial Automation of Oil and gas Industry. **[9]**

b) Explain functions of **[9]**

i) MTU

ii) RTU

iii) HMI

Q5) a) Explain architecture of DCS in detail with the functions at each level. **[7]**

b) What factors makes DCS different from other control systems? Justify. **[5]**

c) State the Advantages and Disadvantages of DCS system. **[5]**

OR

Q6) a) Explain with suitable Schematic how DCS can be used for Water Treatment plant. **[9]**

b) Compare SCADA and DCS. **[8]**

Q7) a) What are the basic components of Numerical control system? Explain the function of each component. **[8]**

b) State the advantages of employing CNC Machines over manual machines. **[5]**

c) Explain Control Net Protocol in detail. **[4]**

OR

Q8) a) Explain in brief: **[8]**

i) Foundation Fieldbus

ii) MODBUS

iii) Ethernet,

iv) TCP/IP

b) Explain DNC system. **[4]**

c) What do you understand by Industry 4.0 Standard? **[5]**

Total No. of Questions : 8]

SEAT No. :

PB2291

[Total No. of Pages : 2

[6263]-129
B.E. (E & TC/Electronics)
JAVA SCRIPT
(2019 Pattern) (Semester - VII) (404184 C) (Elective - III)

Time : 2½ Hours] *[Max. Marks : 70*

Instructions to the candidates:

1) ***Answer Q.1 or Q.2, Q.3 or Q.4, Q.5 or Q.6, Q.7 or Q.8.***
2) ***Neat diagrams must be drawn wherever necessary.***
3) ***Figures to the right indicate full marks.***
4) ***Assume suitable data for writing program, if necessary.***

Q1) a) Explain the Mask out with respect to functions in Java Script. **[6]**

b) Explain how function is used as object in Java Script. **[6]**

c) How Arrays can be used as Stacks and Queues in Java Script. **[6]**

OR

Q2) a) What is Anonymous Function? Explain with example. **[6]**

b) Explain different types of Objects. **[6]**

c) List the various methods of Math object. Explain any one with example. **[6]**

Q3) a) What are common character classes in Regular Expressions? **[6]**

b) Write a short note on Advanced Regular Expressions. **[6]**

c) List String Methods for Regular Expressions and explain any one of them. **[5]**

OR

Q4) a) List the 6 Repetition Quantifiers with their meaning. Explain any 2 with example. **[6]**

b) Explain Static Properties of the RegExp Class Object. **[6]**

c) Describe Limitations of Regular Expressions. **[5]**

Q5) a) Describe Netscape 4 Event Model in detail. **[6]**

b) Explain the role of Event Handlers in Java Script. **[6]**

c) Write short note on DOM and HTML Elements. **[6]**

OR

Q6) a) What is Document Tree? Explain DOM Methods to Create Nodes. **[6]**

b) Elaborate how DOM standard is supported by today's browsers is CSS. **[6]**

c) Explain DOM2 Event Model. **[6]**

P.T.O.

Q7) a) Describe with example the methods alert() and confirm() of Window object. **[6]**

b) Explain Common Window Properties Related to Frames. **[6]**

c) Write a short note on Form Usability and Java Script. **[5]**

OR

Q8) a) Explain Label, Fieldset, and Legend as other form elements. **[6]**

b) What is a significance of form validation? **[6]**

c) State and explain Window features. **[5]**

◀▶ ◀▶ ◀▶

Total No. of Questions : 8]

SEAT No. :

PB2292

[Total No. of Pages : 2

[6263]-130

B.E. (Electronics & Telecommunication Engineering)

EMBEDDED SYSTEM & RTOS

(2019 Pattern) (Semester - VII) (404184 D) (Elective - III)

Time : 2½ Hours] *[Max. Marks : 70*

Instructions to the candidates:

1) ***Solve Q.1 or Q.2, Q.3 or Q.4, Q.5 or Q6, Q.7 or Q.8.***
2) ***Neat diagrams must be drawn wherever necessary.***
3) ***Figures to the right indicate full marks.***
4) ***Assume suitable data, if necessary.***

Q1) a) Explain µCOS - II kernel structure. **[8]**

b) Explain following functions: **[8]**

i) OSSemPend()

ii) OSSemPost()

iii) OSMboxdelete()

iv) OSTaskCreate()

OR

Q2) a) Explain following µCOS - II kernel services with suitable diagrams. **[8]**

i) Semaphores

ii) Time Management

b) Explain two functions each related to message Mailbox and Message Queue. **[8]**

Q3) a) Explain BIOS versus bootloader. Also explain the role of Uboot. **[9]**

b) Explain in detail the concept of embedded Linux distributions. **[9]**

OR

P.T.O.

Q4) a) Draw a typical embedded Linux development set up and explain how it works. **[9]**

b) Explain various binary utilities in tool chain. **[9]**

Q5) a) Draw and explain architecture of Linux Kernel. **[9]**

b) What are the features of Linux Kernel. Also explain the types of Linux kernel. **[9]**

OR

Q6) a) Explain tools used to configure and build the Linux kernel. **[9]**

b) Explain in brief device drivers in Linux. What is Loadable Kernel Modules (LKM). **[9]**

Q7) a) Explain the embedded software development tools. **[9]**

b) Explain the development platform of Arduino Uno with reference to IDE. Board details and application. **[9]**

OR

Q8) a) Explain the development platform of Raspberry Pi with reference to IDE, Board details and application. **[9]**

b) List the testing and debugging tools. Explain how testing and debugging is carried out with the help of these tools. **[9]**

* * *

Total No. of Questions : 8] **SEAT No. :**

PB2293 **[Total No. of Pages : 2**

[6263]-131
B.E. (Electronics &Telecommunication)
MODERNIZED IOT
(2019 Pattern) (Semester - VII) (404184 E) (Elective - III)

Time : 2½ Hours] ***[Max. Marks : 70***

Instructions to the candidates:

1) ***Answer Q.1 or Q.2, Q,3 or Q.4 Q.5 or Q.6 Q.7 or Q.8.***
2) ***Neat diagrams must be drawn wherever necessary.***
3) ***Figures to the right indicate full marks.***
4) ***Use of an electronic pocket calculator is allowed.***
5) ***Assume Suitable data, if necessary.***

Q1) a) Compare IPv6, 6LoWPAN and 6Ti SCH Network layer Protocols. List three applications of each. **[9]**

b) Describe in detail the wireless HART Communication Protocol. **[8]**

OR

Q2) a) Describe the session layer-HTTP, CoAP, and MQTT protocols. Also write their advantages and disadvantages. **[9]**

b) Describe in detail the TCP and UDP transport layer protocal. **[8]**

Q3) a) What is an IoT board? List the available IoT boards. Explain interfaces that IoT boards typically have. **[9]**

b) List out and explain any 8 Arduino functions in detail. **[8]**

OR

Q4) a) Interface the LED with Arduino board and write a program for LED Blinking? **[9]**

b) Explain deployment of IoT with Raspberry Pi Board? **[8]**

P.T.O.

Q5) a) Explain the application of IIoT in: **[9]**

i) Oil and Gas Industry,

ii) Healthcare

b) Describe the catalyst and Precursors of IIoT and innovations in IIoT with its challenges. **[9]**

OR

Q6) a) Draw and explain the Architecture of IIoT. **[9]**

b) What is Zigbee? Explain Zigbee architecture. List out applications of Zigbee. **[9]**

Q7) a) Explain in detail the Air Pollution monitoring system. **[9]**

b) Discuss in detail the concept of smart cities. **[9]**

OR

Q8) a) Design an IoT-based forest fire detection system, specifying the sensors, communication methods, and data analysis techniques. **[9]**

b) Briefly explain the application of IoT in: **[9]**

i) Smart Grid and

ii) Smart Parking

❋ ❋ ❋

Total No. of Questions : 8]

SEAT No. :

PB-2294

[Total No. of Pages : 2

[6263]-132

B.E. (E & TC)

DATA MINING

(2019 Pattern) (Semester - VII) (404185A) (Elective - IV)

Time : 2½ Hours] *[Max. Marks : 70*

Instructions to the candidates:

1) ***Answer Q. No. 1 or 2, Q. No. 3 or 4, Q5 or Q6, Q7 or Q8.***
2) ***Neat diagrams to be drawn wherever necessary.***
3) ***Figures to the right indicate full marks.***
4) ***Use of calculator is allowed.***
5) ***Assume suitable data if necessary.***

Q1) a) Explain Decision Tree Induction methods. **[9]**

b) What are the different methods of Frequent Item set Mining Methods? **[9]**

OR

Q2) a) Give in detail the steps and algorithm of FP growth algorithm. **[9]**

b) Describe different data visualization techniques. **[9]**

Q3) a) Write in detail on CART algorithm. **[9]**

b) Explain use of K-Nearest Neighbor Classification algorithm with suitable example. **[9]**

OR

Q4) a) Give the steps involved in CART algorithm. **[9]**

b) Write short notes on Support Vector Machines. **[9]**

Q5) a) Discuss the different types of outliers that occur in a dataset. **[9]**

b) Elaborate different types of data in cluster analysis. **[8]**

OR

P.T.O.

Q6) a) Detail BDSCAN clustering algorithm with an example. **[9]**

b) Give the point of differences between classification and clustering. **[8]**

Q7) a) Explain the Page ranking technique in detail. **[9]**

b) Discuss the- steps involved in HITS algorithm. **[8]**

OR

Q8) a) Explain web structure mining along with list of approaches used to structure the web pages to improve effectiveness of search engines and crawlers. **[9]**

b) Differentiate between Web usage mining and Web Structure mining. **[8]**

⌘⌘⌘

Total No. of Questions : 8]

SEAT No. :

PB-2295

[Total No. of Pages : 2

[6263]-133

B.E. (E & TC)

ELECTRONIC PRODUCT DEVELOPMENT

(2019 Pattern)(Semester - VII) (404185B) (Elective - IV)

Time : 2½ Hours] ***[Max. Marks : 70***

Instructions to the candidates :

1) ***Answer Q.1 or Q.2, Q.3 or Q.4, Q.5 or Q.6, Q.7 or Q.8.***
2) ***Neat diagrams must be drawn wherever necessary.***
3) ***Figures to the right indicates full marks.***
4) ***Use of electronic pocket calculator is allowed.***
5) ***Assume suitable data if necessary.***

Q1) a) List & Explain different commonly identifiable limitations of the software. **[9]**

b) Explain the concept of risk abatement and failure prevention. **[9]**

OR

Q2) a) What are the features of good programming practices? **[5]**

b) Explain the term user interface w.r.t. software. **[5]**

c) What is real time software? Explain its significance in product design with example. **[8]**

Q3) a) Define & Explain following terms associated with PCB Design. **[9]**

i) EMI (Electromagnetic interference)

ii) EMC (Electromagnetic compatibility)

iii) ESD (Electrostatic discharge)

b) State & Explain cooling techniques. **[8]**

OR

P.T.O.

Q4) a) State & Explain types of shielding techniques. **[9]**

b) What are grounding methodologies? Explain with suitable sketches. **[8]**

Q5) a) Explain the different methods of product debugging? **[9]**

b) Explain how integration,validation and verification support engineering development. **[9]**

OR

Q6) a) Define & Explain concept of conducted EMI & radiated EMI. **[9]**

b) Compare different types of ADC's with respect to parameters such as resolution, conversion time, power dissipation error. **[9]**

Q7) a) Explain the visual technique of documentation. **[8]**

b) Explain the following terms with respect to documentation. **[9]**

i) Records

ii) Accountability

iii) Liability

OR

Q8) a) Define documentation, what is need of documentation? Explain different types of documentation. **[9]**

b) What is importance of Bill of material? Explain bill of material with suitable example. **[8]**

⌘⌘⌘

Total No. of Questions : 8]

SEAT No. :

PB-2296

[Total No. of Pages : 2

[6263]-134

B.E. (E & TC) (Endsem)

DEEP LEARNING (Elective - IV)

(2019 Pattern) (Semester - VII) (404185C)

Time : 2½ Hours] *[Max. Marks : 70*

Instructions to the candidates:

1) ***Solve any four Q1 or Q2, Q3 or Q4, Q5 or Q6, Q7 or Q8.***
2) ***Neat diagram must be drawn wherever necessary.***
3) ***Assume suitable data if necessary.***

Q1) a) What is the significance of Batch Normalization? How covariate shift reduced using batch normalization? **[7]**

b) Describe the following activation functions : **[10]**

i) Sigmoid,

ii) Threshold,

iii) ReLU

'Vanishing Gradient' occur in Sigmoid Function and 'Dying ReLU' occur in ReLu - Justify

OR

Q2) a) Write a Note on : **[7]**

i) Dropout Method and

ii) Regularization

b) Explain the concept of Overfitting and Underfitting in deep learning. Support both terms using real time examples? **[10]**

Q3) a) With the help of architectures show that Speed and Accuracy of VGG is greater than AlexNet. **[10]**

b) Show that CNN works same as human brain for image recognition through various steps. **[8]**

OR

P.T.O.

Q4) a) With the help of architecture explain each block of DenseNet in detail. Enlist advantages and disadvantages. **[10]**

b) What is weight initialization? Describe the various weight initialization techniques. **[8]**

Q5) a) Explain the working of RNN with suitable diagram. Illustrate the Vanishing Gradient problem occurs in simple RNN. **[10]**

b) How Name Entity Recognition Problem is fixed using Bidirectional RNN? Explain with the help of suitable diagram. **[7]**

OR

Q6) a) How short term memory problem avoided in LSTM? Explain with the help of suitable diagram. **[10]**

b) What is the difference between LSTM and GRU? Explain the working of GRU with suitable diagram. **[7]**

Q7) a) What is NLP? Enlist the advantages and disadvantages of NLP. **[6]**

b) What is sentiment analysis? Describe the various use cases of sentiment analysis. **[6]**

c) How NLP works in text pre-processing. **[6]**

OR

Q8) a) Differentiate between classical image processing and image deep learning image processing. **[6]**

b) How deep learning works for image classification? **[6]**

c) How deep learning works for Audio Wavenet? **[6]**

⌘⌘⌘

Total No. of Questions : 8]

SEAT No. :

PB-2297

[Total No. of Pages : 2

[6263]-136

B.E. (Electronics/Electronics and Telecommunication Engineering)

SMART ANTENNAS

(2019 Pattern) (Semester - VII) (404185E) (Elective - IV)

Time : 2½ Hours] *[Max. Marks : 70*

Instructions to the candidates:

1) ***Answer Q1 or Q2, Q3 or Q4, Q5 or Q6, Q7 or Q8.***
2) ***Figures to the right indicate full marks.***
3) ***Assume suitable data, if necessary.***

Q1) a) Explain in detail about mutual coupling effect of smart antenna. **[6]**

b) Draw and explain the transmitter and receiver architecture of smart antenna. **[6]**

c) Explain the following smart antenna systems in detail : **[6]**

i) Switch Beam System

ii) Adaptive Array System

OR

Q2) a) Explain following terms related to smart antenna : **[6]**

i) Beam Forming

ii) Beam Steering

iii) Degree of Freedom

b) With the help of block diagram explain components present in smart antenna system. **[6]**

c) What are the features of a smart antenna system? Write benefits of smart antennas. Also mention few applications of smart antennas in wireless systems. **[6]**

Q3) a) Explain in detail linear prediction method for direction of arrival Estimation (DOA). **[6]**

b) Explain Maximum Likelihood method used for DOA estimation. **[5]**

c) Explain Eigen Structure method used for DOA estimation. **[6]**

OR

P.T.O.

Q4) a) Explain in detail maximum entropy method for DOA. **[6]**

b) Write short note on ESPRIT algorithm. **[5]**

c) Explain the following Multiple Signal Classification.(MUSIC) algorithms in detail : **[6]**

i) Root Music

ii) Cyclic Music

Q5) a) With the help of block diagram explain concept of Beam Forming in Smart Antenna Systems. **[6]**

b) List out & explain any one adaptive algorithm for Beam Forming. **[6]**

c) Write short note on Minimum Mean Square Error (MMSE) method for Beam Forming. **[6]**

OR

Q6) a) Explain in detail Direct Matrix Inversion (DMI). **[6]**

b) With the help of block diagram explain Multiple Sidelobe Canceler. **[6]**

c) Write short note on Classical Beam former used in smart antenna system. **[6]**

Q7) a) Explain with block diagram Multiple Input Multiple Output Communication System. **[6]**

b) Explain the concept of massive MIMO. Also list out applications of massive MIMO. **[5]**

c) Explain different MIMO diversity methods and formats. **[6]**

OR

Q8) a) Explain following MIMO configurations in detail : **[6]**

i) SISO

ii) MISO

b) Explain with block diagram Hybrid antenna array architecture for mm wave. **[6]**

c) Compare between MIMO and massive MIMO system. **[5]**

⌘⌘⌘

Total No. of Questions: 8]

SEAT No. : ____

PB2298

[Total No. of Pages :2

[6263]-137
B.E. (E & TC)
FIBER OPTIC COMMUNICATION
(2019 Pattern) (Semester-VIII) (404190)

Time : 2½ Hours] ***[Max. Marks : 70***

Instructions to the candidates:

1) ***Answer Q.1 or Q.2, Q.3 or Q.4, Q.5 or Q.6, Q.7 or Q.8.***
2) ***Figures to the right indicate full marks.***
3) ***Assume the suitable data, if necessary.***
4) ***Neat diagrams must be drawn wherever necessary.***

Q1) a) Explain the following parameters associated with the photo detectors: quantum efficiency, responsivity, long cutoff wavelength.

For a Si photodetector calculate the long cutoff wavelength. **[8]**

b) State and explain the requirements from photo detectors.Draw and explain the working of a photo transistor. **[10]**

OR

Q2) a) Explain the following parameters associated with the photo detectors: thermal noise, dark current noise, quantum noise and receiver sensitivity. **[8]**

b) Describe with the aid of suitable diagrams the avalanche photo diode (APD). Compare between the photodiodes: p-n and p-i-n photo detectors. Comment on their usefulness from link design perspective. **[10]**

Q3) a) Explain the concept of wavelength division multiplexing (WDM) technique. Draw the block diagram of a WDM system and explain the function of each block. **[8]**

b) Write the optical power budget equation for a point-to-point link. A 40 km Fast Ethernet single mode link with 0.4 dB/km loss, at 1310 nm is used with two connector pairs and 5 splices between a transmitter of - 8 dBm power and receiver with a sensitivity of - 38 dBm.

Given: one Connector pair loss =0.75

dB& Per splice loss = 0.1dB. calculate:

i) Total connector loss and total splice loss

ii) Total link loss considering a safety margin of 6 dB.

iii) Estimate the maximum total fiber distance for the fiber optic link. **[9]**

OR

P.T.O.

Q4) a) Explain with neat block diagram. **[8]**

i) Link power budget

ii) Rise time budget

b) State the various types of amplifiers used in lightwave systems amplifiers. Compare between SOA and EDFA type of amplifiers. **[9]**

Q5) a) Define Optical Network. Explain the term optical node & light path with a suitable diagram relative to optical network.

Define network topology. State and explain types of network topologies with suitable diagram. **[9]**

b) With suitable diagrams, explain the concept of FTTH and FTTP. State advantages of FTTH and FTTP. **[9]**

OR

Q6) a) What is FTTX. What are the different categories of FTTX? Explain FTTX with respect to architecture, advantages. Compare the categories. **[9]**

b) With suitable diagrams explain terrestrial and Submarine optical networks. **[9]**

Q7) a) Explain the various methods used to measure the fiber attenuation. Compare and comment on the accuracy of each of the methods. **[8]**

b) Draw and explain with a block diagram the working of an OTDR. Draw the trace of an OTDR and explain the various events observed on the display of an OTDR. **[9]**

OR

Q8) a) State and explain the need of a BER tester. Explain the concept of eye diagram and the various parameters that can be measured from the eye diagram. **[8]**

b) Explain the following instruments used for the testing and measurement purpose in optical fiber networks: **[9]**

- visual fault indicator
- optical power meter
- OSA



Total No. of Questions: 8]

SEAT No. :

PB2299

[Total No. of Pages :3

[6263]-138
B.E. (E&TC)
BIOMEDICAL SIGNAL PROCESSING
(2019 Pattern) (Semester-VIII) (Elective-V) (404191A)

Time : 2½ Hours] ***[Max. Marks : 70***

Instructions to the candidates:

1) ***Answer Q.1 or Q.2, Q.3 or Q.4, Q5 or Q6, Q7 or Q8.***
2) ***Neat diagrams must be drawn wherever necessary.***
3) ***Figures to the right indicate full marks.***
4) ***Assume Suitable data if necessary.***

Q1) a) Illustrate A frontal cross section of the brain and brain stem. Articulate the brain functions of the brain **[7]**

b) Draw the positioning of EEG electrodes according to the international 10/20 system. **[4]**

c) State significance of EEG in clinical diagnostics of neurological disordrs. **[7]**

OR

Q2) a) Explain EEG frequency spectrum in short also draw representative frequency patterns from the four spectral groups in the EEG **[7]**

b) Which are the Sources of noise in EEG signal? Explain Frequency-Domain Analysis of EEG signal. **[4]**

c) Which are the diseases of central nervous system and EEG? Explain epilepsy and its related brain ware forms. **[7]**

Q3) a) Illustrate the process of contraction and relaxation with respect to the muscle, also state the type of muscles. **[6]**

b) Paraphrase the significance of EMG signal. **[4]**

c) Which are the neuro muscular diseases? Which neuro muscular diseases are diagnosed by processing of EMG signal? **[7]**

OR

P.T.O.

Q4) a) Which are the general methods for acquiring EMG signal? Illustrate the different phases for electrode placements in EMG. **[6]**

b) Write a short note on processing and feature extraction of EMG and it's (Any Two) **[5]**

i) Time Domain Analysis

ii) Frequency Domain Analysis

iii) Wavelet Domain Analysis

c) Draw and explain motor unit of nerves **[6]**

Q5) a) Define the term, 'Blood Pressure'; State its types also illustrate the instrument used to measure Blood Pressure? **[8]**

b) Enlist the sources of the biomedical signal? **[3]**

c) What do you mean by MEG? Compare MEG over EEG? What are the advantages and limitations of MEG over EEG? **[6]**

OR

Q6) a) What do you mean by the respiratory signals? State the significance of respiratory signal measurement. Which instruments are used to measure respiratory signal? Draw Airflow signal **[9]**

b) What is the significance of Electro-oculogram? Comment on the measurment of EOG. Draw Detecting vertical and horizontal motion of the eyes using EOG. **[8]**

Q7) a) Which are the biomedical sensors? State its significance by considering type of signal, frequency band, and amplitude. **[7]**

b) Write the selection criteria for the filter to remove the Artifacts from the Biomedical signal. **[5]**

c) Explain in detail how adaptive filters are used for noise cancellation in the biomedical signal. **[6]**

OR

Q8) a) Enlist the digital filters used to remove the noise from biomedical signals. Paraphrase the type of noise in biomedical signals in detail. **[6]**

b) Write short note on (any one) **[6]**

i) Optimal and adaptive filters

ii) Weiner filters

c) Draw and explain Adaptive noise canceller for Cancellation of 50 Hz signal in ECG **[6]**



Total No. of Questions: 8]

SEAT No. : ____

PB2300

[Total No. of Pages :2

[6263]-139
B.E. (E&TC Engineering)
INDUSTRIAL DRIVES & AUTOMATION
(2019 Pattern) (Semester-VIII) (Elective-V) (404191B)

Time : 2½ Hours] ***[Max. Marks : 70***

Instructions to the candidates:

1) ***Answer Q1 or Q2, Q3 or Q4, Q5 or Q6 and Q7 or Q8.***
2) ***Neat diagrams and waveforms must be drawn wherever necessary.***
3) ***Figures to the right indicate full marks.***
4) ***Use of nonprogrammable calculator is allowed.***
5) ***Assume Suitable data if necessary.***

Q1) a) Explain with neat block schematic the control circuit of battery fed chopper controlled DC series motor drive system. **[9]**

b) Compare the response of P, PI and PID controllers **[8]**

OR

Q2) a) Draw and explain the block schematic of closed loop speed controlled separately excited DC motor drive. **[9]**

b) Discuss the impact of the choice of current controller on dynamic performance of DC motor drive system. **[8]**

Q3) a) Derive the torque equation and obtain the condition for maximum torque of three phase induction motor. **[9]**

b) A three phase 4 pole, 440V, 50 Hz induction motor has rotor resistance of 0.2Ω per phase and stand still reactance of 1.8Ω per phase. The full load slip is 5% Determine. **[9]**

i) the synchronous speed

ii) motor speed when it delivers full load

iii) speed at which maximum torque is developed

OR

Q4) a) Enlist different methods of speed control of three phase induction motor. Explain any one method in details. **[9]**

b) Explain with neat diagram the speed control of induction motor using external resistance. **[9]**

P.T.O.

Q5) a) Explain with neat diagram variable frequency control mode of synchronous motor. **[9]**

b) A 6 MW, 3 phase, 11KV star connected, 6 pole 50 Hz, 0.9 leading power factor synchronous mator has X=9Ω and R=0. Rated field current is 50 A. Machine is controlled by variable frequency control at the constant v/f ratio upto the base speed and at the constant V above the base speed determine: **[8]**

i) torque and field current for the rated armature current, 750 rpm and 0.8 leading power factor.

ii) armature current and power factor for half the motor torque, 1500 rpm and rated field current.

iii) armature current and power factor for regenerative braking power output of 4.2 MW at 750 rpm and rated field current.

OR

Q6) a) Explain with neat diagram the working of Synchronous motor drives. **[9]**

b) Draw and explain voltage source inverter drive with open loop control. **[8]**

Q7) a) What is stepper motor? Give the classification of stepper motors. Explain the operation of variable reluctance motor with neat diagram. **[9]**

b) Explain with neat diagram microprocessor based closed loop control of stepper motor. **[9]**

OR

Q8) a) Explain with neat diagram bipolar drive circuit for stepper motor. **[9]**

b) What is limitation of stepper motor in open loop mode? Explain with neat diagram closed loop control of stepping motor. **[9]**



Total No. of Questions: 8]

SEAT No. : ____

PB2301

[Total No. of Pages :2

[6263]-140

B.E. (Electronics & Telecommunication) (Electronics)

ANDROID DEVELOPMENT

(2019 Pattern) (Semester-VIII) (Elective-V) (404191C)

Time : 2½ Hours] ***[Max. Marks : 70***

Instructions to the candidates:

1) ***Answer Q1 or Q2, Q3 or Q4, Q5 or Q6, Q7 or Q8.***
2) ***Neat diagrams must be drawn wherever necessary.***
3) ***Assume Suitable data if necessary.***
4) ***Figures to the right indicate full marks.***

Q1) a) Explain basic building blocks of Android. **[8]**

b) Briefly explain Android API levels. **[6]**

c) What is Dalvik Virtual Machine. **[4]**

OR

Q2) a) Explain components of communication in Android. **[8]**

b) List out UI Components. **[4]**

c) Explain following terms: **[6]**

i) Assets

ii) Layouts

iii) Drawable Resource

Q3) a) What are activities and Explain what is Lifecycle. **[7]**

b) Explain following **[10]**

i) Components of a screen

ii) Adapting to Display Orientation

OR

Q4) a) What is Intents? Explain Linking activities. **[7]**

b) Explain following. **[10]**

i) Fragment Lifecycle

ii) Split/Multi screen Activities

P.T.O.

Q5) a) Explain following user interfaces **[10]**

i) Text view

ii) Progress bar View

b) Explain Animation in Android **[8]**

OR

Q6) a) Briefly explain Android Menus. **[10]**

b) Explain Graphics in Android. **[8]**

Q7) a) Explain Internal and external storage. **[7]**

b) Write a short note on SQLite. **[10]**

OR

Q8) a) Explain database in Android. **[7]**

b) Short note on **[10]**

i) Google Maps

ii) Monitoring a Location



Total No. of Questions: 8]

SEAT No. : ____

PB2302

[Total No. of Pages :2

[6263]-141
B.E. (E&TC)
EMBEDDED SYSTEM DESIGN
(2019 Pattern) (Semester-VIII) (Elective-V) (404191-D)

Time : 2½ Hours] ***[Max. Marks : 70***

Instructions to the candidates:

1) ***Answer Q.1 or Q.2, Q.3 or Q.4, Q5 or Q6, Q7 or Q8.***
2) ***Neat diagrams must be drawn wherever necessary.***
3) ***Figures to the right indicate full marks.***
4) ***Assume suitable data if necessary.***
5) ***Use of scientific calculator is allowed.***

Q1) a) Elaborate Hardware Abstraction Layer (HAL) drivers. **[9]**

b) Discuss the use of HAL library for SPI, I2C and CAN module. **[8]**

OR

Q2) a) Illustrate the classification of API. **[9]**

b) Explain USB Modules in the STM32F4 Microcontroller. **[8]**

Q3) a) How thread Management is done in FreeRTOS? **[9]**

b) Interpret in detail the role of GNU debugger. **[9]**

OR

Q4) a) What is FreeRTOS? How FreeRTOS is configured using STM32 CubeMX? **[9]**

b) Illustrate the role of Debugging with STM32CubeIDE in detail. **[9]**

Q5) a) Discuss procedure of GUI Formation with TouchGFX for any two applications. **[9]**

b) Design an embedded system for PID speed control of DC motor with STM32F4 Microcontroller. **[8]**

OR

P.T.O.

Q6) a) Describe how to Interface of SPI based graphical LCD with STM32F4. **[9]**

b) Design an embedded system for Transferring the Digital Signal Between the PC and STM32F4 Microcontroller. **[8]**

Q7) a) What are the different Android App development tools? **[9]**

b) Illustrate device hardware methods and their interfaces. **[9]**

OR

Q8) a) Write different android platforms used in embedded system. **[9]**

b) Summarize the File system layout and libraries within AOSP and imported into the AOSP (Android Open Source Project). **[9]**



Total No. of Questions: 10]

SEAT No. : ____

PB2303

[Total No. of Pages :2

[6263]-142
B.E. (E & TC)
MOBILE COMPUTING
(2019 Pattern) (Semester-VIII) (Elective-V) (404191E)

Time : 2½ Hours] ***[Max. Marks : 70***

Instructions to the candidates:

1) ***Answer Q.1 or Q.2, Q.3 or Q.4, Q5 or Q6, Q7 or Q8. and Q.9 or Q.10.***
2) ***Neat diagrams must be drawn wherever necessary.***
3) ***Figures to the right indicate full marks.***
4) ***Assume suitable data if necessary.***

Q1) a) Explain basic terminologies of mobile IP. **[8]**

b) How does dynamic source routing (DSR) route the data? What are its advantages and disadvantages? **[8]**

OR

Q2) a) Explain MANETs using mobile IP with suitable diagram. **[8]**

b) What is the basic purpose of DHCP? Explain the protocol with suitable diagram. **[8]**

Q3) a) Write short note on selective retransmission, an extension of TCP. List its advantages and disadvantages. **[8]**

b) Explain with diagram the registration process of a mobile node via foreign agent (FA) and directly with home agent (HA). **[8]**

OR

Q4) a) Explain the modifications of Indirect TCP. What are its advantages and disadvantages? **[8]**

b) Compare indirect TCP, snooping TCP and mobile-TCP. **[8]**

P.T.O.

Q5) a) Explain reflection, Scattering and ISI in multipath fading channel with suitable diagram. **[7]**

b) What is non-coherent detection? Explain with neat diagram, non-coherent detection of FSK. **[7]**

OR

Q6) a) Explain fading in detail? Classify types of fading. **[7]**

b) Describe multipath propagation with neat diagram. What is ISI in multipath fading channels? **[7]**

Q7) a) What is a mobile payment system? Explain payment process using credit card. **[7]**

b) List and explain in brief the design issues of a mobile OS. **[7]**

OR

Q8) a) Explain mobile operating system. What are needs of a mobile OS? List different types of OS. **[7]**

b) Draw B2B model and explain any one B2B application. **[7]**

Q9) Explain any five characteristics of mobile computing. **[10]**

OR

Q10) Explain Rayleigh distribution. How mean and variance of Rayleigh distribution is calculated? **[10]**



Total No. of Questions : 8]

SEAT No. :

PB2304

[Total No. of Pages :2

[6263]-143
B.E. (Electronics & Telecommunications)
SYSTEM ON CHIP
(2019 Pattern) (Semester-VIII) (Elective - VI) (404192 A)

Time : 2½ Hours] *[Max. Marks : 70*

Instructions to the candidates:

1) ***Answer Q.1 or Q.2, Q.3 or Q.4, Q.5 or Q.6, Q.7 or Q.8.***
2) ***Figures to the right indicate full marks.***
3) ***Draw neat diagram wherever necessary.***
4) ***Assume suitable data, if necessary.***

Q1) a) Explain with one example how to write and instantiate Verilog gate level primitive model. **[8]**

b) What do you understand by tasks and functions in Verilog code? Give one simple example of each. **[10]**

OR

Q2) a) Explain with one example each: blocking and non-blocking statements in verilog. **[8]**

b) Explain with one example of Verilog code for each: **[10]**

i) Dataflow Modeling and;

ii) Behavioral Modeling

Q3) a) What is the difference between floor planning and placement? What are the different types of floor planning? Explain abutted and non abutted floor plan techniques. **[9]**

b) Explain variable-die and fixed-die routing in Standard-cell row-based placement. **[8]**

OR

Q4) a) Explain the Partitioning in floor planning covering the following aspects:**[9]**

i) Need of partitioning,

ii) Rules of partitioning and

iii) Methods of partitioning

b) Write Short Notes on Routing for SoC. **[8]**

P.T.O.

Q5) a) Write short note on SoC processor architecture. **[10]**

b) Explain Super Scalar SoC Processors. **[8]**

OR

Q6) a) Write short note on Processor selection for SOC. **[10]**

b) Explain Vector processors and vector instructions extensions. **[8]**

Q7) a) Explain SoC bus architecture AMBA with suitable diagram. **[10]**

b) What do you understand by On die and Off die memory chip technology? **[7]**

OR

Q8) a) Explain SOC memory with Cache memory performance and partitioning, multi-level cache. **[10]**

b) Write short note on Core Connect bus in SoC. **[7]**

Total No. of Questions : 8]

SEAT No. :

PB2305

[Total No. of Pages :2

[6263]-144
B.E. (E & TC)
NANO ELECTRONICS
(2019 Pattern) (Semester-VIII) (Elective - VI) (404192B)

Time : 2½ Hours] *[Max. Marks : 70*

Instructions to the candidates:

1) ***Answer Q.1 or Q.2, Q.3 or Q.4, Q.5 or Q.6, Q.7 or Q.8.***
2) ***Neat diagram must be drawn wherever necessary.***
3) ***Figures to the right indicates full marks.***
4) ***Assume suitable data, if necessary.***

Q1) a) What is cluster? Explain Carbon nano tubes. **[8]**

b) Explain Nano material and its types. **[8]**

OR

Q2) a) Explain properties of CNT. **[8]**

b) Explain Semiconductor Nano particles. **[8]**

Q3) a) Explain Photolithography process in detail. **[9]**

b) Explain Electron Beam Lithography with neat Diagram. **[9]**

OR

Q4) a) Explain Nano electronics for communication. **[9]**

b) Explain Atomic Lithography with neat Diagram. **[9]**

Q5) a) What are molecular switch? Explain Redox switch. **[9]**

b) Explain MEMS. **[9]**

OR

Q6) a) Define Nano Machine? Explain Nano Tubes Actuators. **[9]**

b) Explain types of Super Molecular Switches. **[9]**

P.T.O.

Q7) a) What are Nano Sensor? Explain Optical Sensor. **[9]**

b) Which are types of Nano Sensor? Explain Nano Biosensor. **[9]**

OR

Q8) a) What is use of Nano Technology in Electronics? **[9]**

b) Explain Transformation. **[9]**

Total No. of Questions : 8]

SEAT No. :

PB2306

[Total No. of Pages :2

[6263]-145
B.E. (Electronics/ E & TC)
REMOTE SENSING
(2019 Pattern) (Semester-VIII) (Elective - VI) (404192 C)

Time : 2½ Hours] *[Max. Marks : 70*

Instructions to the candidates:

1) ***Answer Q.1 or Q.2, Q.3 or Q.4, Q.5 or Q.6, Q.7 or Q.8.***
2) ***Neat diagram must be drawn wherever necessary.***
3) ***Figures to the right indicates full marks.***
4) ***Assume suitable data, if necessary.***

Q1) a) With suitable diagram and example, explain various types of satellite data products. **[8]**

b) Elaborate satellite data processing products offered by space agencies. **[8]**

OR

Q2) a) Explain Geometric corrections and atmospheric corrections and how they are removed during preprocessing. **[8]**

b) With suitable illustrations, explain elements of visual intrepretation used in remote sensing. **[8]**

Q3) a) With reference to any one real life application, elaborate suitability of microwave remote sensing. **[8]**

b) Elaborate details of SAR and SLAR. Explain characteristic and interpretation of SAR data. **[10]**

OR

Q4) a) Explain principles of LIDAR operation. Give list of applications along with suitability of types. **[10]**

b) Explain concept of microwave polarization in synthetic Aperture RADAR. **[8]**

P.T.O.

Q5) a) Give name of India's own navigation system and its key features, application areas with suitable diagram of satellite positioning. **[10]**

b) Explain vulnerabilities of GNSS and its signal structure. **[8]**

OR

Q6) a) Explain Ground based augmentation system and space based augmentation system. **[10]**

b) Explain navigation message of GNSS signal with suitable diagram. **[8]**

Q7) Elaborate application of Remote sensing with suitable use case and methodology. **[18]**

a) Environmental Management

b) Forestry

OR

Q8) Elaborate application of Remote sensing with suitable use case and methodology. **[18]**

a) Urban Sprawl

b) Flooding disaster

Total No. of Questions : 8]

SEAT No. :

PB2307

[Total No. of Pages :2

[6263]-146
B.E. (Electronics / E&TC)
DIGITAL MARKETING
(2019 Pattern) (Semester - VIII) (Elective - VI) (404192 D)

Time : 2½ Hours] *[Max. Marks : 70*

Instructions to the candidates:

1) ***Answer Q.1 or Q.2, Q.3 or Q.4, Q.5 or Q.6, Q.7 or Q.8.***
2) ***Neat diagrams must to be drawn wherever necessary.***
3) ***Figures to the right indicate full marks.***
4) ***Use of calculator is allowed.***
5) ***Assume suitable data, if necessary.***

Q1) a) Explain the preventive measures for Ad Hi-Jack. **[9]**

b) Explain the concept of shared budget in search engine marketing and how it can be applied to mobile advertising campaigns. **[8]**

OR

Q2) a) Explain the bidding strategy for CPC. **[9]**

b) Explain the steps involved in designing Image Ads and Video Ads. **[8]**

Q3) a) Enlist the advantages and disadvantages of social media in business. **[8]**

b) What do you mean by campaign optimization in Facebook? **[9]**

OR

Q4) a) Explain in detail Facebook marketing and the type of Facebook advertising. **[9]**

b) Explain in brief about YouTube monetization. **[8]**

Q5) a) Explain the importance of billing and reporting in social media marketing and how they contribute to measuring the effectiveness of campaigns. **[9]**

b) How to improve the traffic and lead generation quality with LinkedIn ads? **[9]**

OR

P.T.O.

Q6) a) What do you mean by email marketing? Discuss on its types. **[9]**

b) Discuss the benefits of implementing a segmentation strategy in email marketing for social media marketing campaigns. **[9]**

Q7) a) Explain the concept of Mob-Ad in digital marketing and its significance in reaching and engaging with mobile users. **[9]**

b) Discuss the importance of online reviews in digital marketing and their impact on consumer decision-making and brand reputation. **[9]**

OR

Q8) a) Explain the concept of"NoClick Searches" in digital marketing and its impact on search engine result pages. **[9]**

b) What is visual search in digital marketing? Explain the different ways of doing visual search with example. **[9]**

Total No. of Questions : 8]

SEAT No. :

PB2308

[Total No. of Pages :2

[6263]-147
B.E. (Electronics Engineering)
VLSI DESIGN
(2019 Pattern) (Semester-VII) (404201)

Time : 2½ Hours] *[Max. Marks : 70*

Instructions to the candidates:

1) ***Answer Q.1 or Q.2, Q.3 or Q.4, Q.5 or Q.6, Q.7 or Q.8.***
2) ***Neat diagrams must be drawn wherever necessary.***
3) ***Figures to the right indicate full marks.***
4) ***Use of electronic pocket calculator is allowed.***
5) ***Assume suitable data, if necessary.***

Q1) a) Sketch the diagram and explain in detail Random Access Memory Organization. Describe the SRAM and its peripherals. **[9]**

b) Explain the classification of memory. Enlist the performance parameters and timing parameters of semiconductor memory. **[8]**

OR

Q2) a) Draw the schematic of DRAM cell with necessary peripherals and explain read - write cycles with the help of timing diagram. **[9]**

b) Write short notes on

i) One Transistor DRAM cell

ii) Sense amplifier **[8]**

Q3) a) Explain in detail about the Block Placement and channel definition. **[8]**

b) Discuss the two complementary ways to improve clock distribution. Explain in detail about H-tree and balanced tree clock network. **[9]**

OR

Q4) a) Explain in details about interconnect properties and wiring plans of transistor in chip design. Describe Switchbox Routing in detail. **[9]**

b) Discuss any two properties of ideal power distribution network. Explain in detail about different types of Packages in VLSI chip design. **[8]**

P.T.O.

Q5) a) Use Shannon's expansion theorem around a and b for the function.

$$z = abcd'\,ef' + a'\,b'\,c'\,def' + b'\,cde'\,f$$

So that it can be implemeted using a minimum number of 4 - variable functions. Rewrite Z to indicate how it will be implemented using 4 - variable function generators and draw a block diagarm. Indicate the function generated by each function generator. **[9]**

b) Sketch the block diagram of TAP controller and explain it in detail. **[9]**

OR

Q6) a) Explain carry chains and cascade carry chains in FPGA with neat sketch. **[9]**

b) Explain in detail about Dedicated Memory in FPGAs. List out the benefits of boundary scan. **[9]**

Q7) a) Sketch the Schematic and Stick Diagram of the following circuits:

i) CMOS NOR Gate

ii) CMOS EX-OR Gate **[10]**

b) Explain the concept of constant-field scaling and constant voltage scaling in detail. **[8]**

OR

Q8) a) Describe the following:

i) Layout Design rule

ii) Device Modeling **[10]**

b) Explain the circuit extractors and hierarchical circuit extractors in detail. **[8]**

Total No. of Questions : 8]

SEAT No. : ____

PB2309

[Total No. of Pages : 2

[6263]-148

B.E. (Electronics Engineering)

ADVANCED POWER ELECTRONICS

(2019 Pattern) (Semester - VII) (404202)

Time : 2½ Hours] ***[Max. Marks : 70***

Instructions to the candidates:

1) ***Attempt Q1 or Q2, Q3 or Q4, Q5 or Q6, Q7 or Q8.***
2) ***Figures to the right indicate full marks.***

Q1) a) Explain Basic characteristics of DC motors, Operating modes and Motor performance parameters. **[8]**

b) Explain Dynamic and regenerative braking of DC motors. **[9]**

OR

Q2) a) Compare converter fed drive & chopper fed drive. **[8]**

b) Explain Microprocessor based control of dc drives. **[9]**

Q3) a) Explain Induction motor Characteristics in details. **[9]**

b) Elaborate Variable frequency CSI Drives with suitable waveforms. **[9]**

OR

Q4) a) Elaborate Variable frequency Square wave VSI Drives with suitable waveforms. **[9]**

b) Explain Variable frequency SPWM VSI Drives with suitable waveforms. **[9]**

Q5) a) Explain different types of Stepper motor drives in details. Give its advantages and disadvantages. **[8]**

b) Explain Switched reluctance motor drive with suitable diagrams. Give its advantages and disadvantages. **[9]**

OR

P.T.O.

Q6) a) Explain Brushless DC drives. Give its advantages and disadvantages. **[8]**

b) Write a short note on Servo motor drive. **[9]**

Q7) a) Explain Working of wind power system. Elaborate Standalone wind energy systems and Grid connected wind energy systems. **[9]**

b) Explain different types of wind generator Control of wind turbines. **[9]**

OR

Q8) a) Elaborate working of solar power system. Explain different types of photovoltaic system. **[9]**

b) Explain a Case study to implement solar power system: Selection of Solar panel, inverter, battery, charge controller, Metering of solar based system. **[9]**

x x x

Total No. of Questions : 8]

SEAT No. :

PB-2310

[Total No. of Pages : 2

[6263]-149
B.E. (Electronics Engineering)
Electronics System Design
(Semester - VII) (2019 Pattern) (404203)

Time : 2½ Hours] *[Max. Marks : 70*

Instructions to the candidates:

1) ***Answer Q.No. 1 or 2, 3 or 4, 5 or 6 and 7 or 8***
2) ***Figures to right indicate full marks.***
3) ***Assume suitable data, if necessary.***

Q1) a) Draw and explain interfacing of LCD with microcontroller. **[6]**

b) Compare different microcontroller architectures. **[6]**

c) Write short note on: **[8]**

i) I2C Bus

ii) SPI Bus

OR

Q2) a) Draw and explain interfacing of Keyboard with microcontroller. **[6]**

b) What are different factors to be considered in selection of microcontroller? Explain it in details. **[6]**

c) Write a short note on LIN & CAN bus. **[8]**

Q3) a) With neat diagram explain step by step stages of software development in electronic product. **[8]**

b) Write a note on : **[8]**

i) Compiler

ii) Simulator

P.T.O.

OR

Q4) a) Explain factors affecting the choice of assembly language & high level language. **[8]**

b) What are the features of simulators, what is the role of documentation in product design & development? **[8]**

Q5) a) Explain PCB design rules for analog circuits. **[8]**

b) What is EMI & EMC? Explain the different standards for same. **[8]**

OR

Q6) a) Explain rules of PCB Design for mixed signal circuits. **[8]**

b) Explain the following terms with neat diagram : **[8]**

i) Shielding

ii) Grounding

Q7) a) What is need of environmental testing? Explain any one type of environmental testing in detail. **[9]**

b) Explain Sensitivity and Monte Carlo analysis used in finding fault in circuit. **[9]**

OR

Q8) a) What are the features of Logic Analyzer? Explain Logic Analyzer with the help of neat block diagram. **[9]**

b) What are the features of DSO? Explain the significance of the following specifications of DSO: **[9]**

i) Memory depth

ii) Sampling rate

iii) Band width

Total No. of Questions : 8]

SEAT No. :

PB2311

[Total No. of Pages : 2

[6263]-152
B.E. (Electronics)
INTERNET OF THINGS
(2019 Pattern) (Semester - VII) (404204 A) (Elective - III)

Time : 2½ Hours] ***[Max. Marks : 70***

Instructions to the candidates:

1) ***Answer Q.1 or Q.2, Q,3 or Q.4, Q.5 or Q.6 and Q.7 or Q.8.***
2) ***Figures to the right side indicate full marks.***
3) ***Assume Suitable data, if necessary.***

Q1) a) List and elaborate the benefits of cloud computing. **[6]**

b) Draw and explain the basic architecture of cloud computing. **[6]**

c) Explain characteristics features of WSN. What are the applications WSN? Explain any one application in detail with appropriate diagram. **[8]**

OR

Q2) a) Draw and explain in detail architecture of Wireless Sensor Network. **[6]**

b) Explain infrastructure as a service (IaaS) with neat diagram. State its advantages. **[6]**

c) What is cloud? What are different types of cloud? With help of neat diagram explain each type in detail. **[8]**

Q3) a) Write the features of Arduino UNO board. Explain functions of following keyword with suitable example. **[8]**

i) Serial. begin()

ii) Analog Read()

iii) Digital Write()

b) Explain working of ultrasonic sensor. Draw the interfacing diagram of ultrasonic sensor with Raspberry Pi. Also write the program for same.**[8]**

OR

P.T.O.

Q4) a) What is Raspberry Pi? Elaborate the features of Raspberry Pi. Why Raspberry Pi is more successful than other? **[8]**

b) Explain the sensor DHT 11. Draw the interfacing diagram of DHT11 with Arduino Board. Also write the program for same. **[8]**

Q5) a) What is big data? Elaborate the characteristics of big data? Explain structured and unstructured data with suitable example. **[8]**

b) Explain the following terms: **[8]**

i) Statistical Models

ii) Regression Analysis

OR

Q6) a) Draw and explain the basic architecture of Big data solution. **[8]**

b) What is Hadoop? Draw architecture of Hadoop. Explain function of each block in detail. **[8]**

Q7) a) Explain the following with help of neat diagram **[9]**

i) IoT based Smart car parking

ii) Smart Agriculture System using IoT.

b) Explain modern trends and challenges in IoT in detail. Also list the wearable technology. **[9]**

OR

Q8) a) What do you think citizens want from smart cities? Elaborate IoT use cases for smart cities in brief. **[9]**

b) Explain the following with help of neat diagram **[9]**

i) Greenhouse Monitoring System using IoT.

ii) Smart Health Care Monitoring System using IoT.

❋ ❋ ❋

Total No. of Questions : 8]

SEAT No. :

PB4477

[Total No. of Pages : 2

[6263]-153R
B.E. (Electronics)
SOFTWARE DEFINED RADIO
(2019 Pattern) (Semester - VII) (404204 B) (Elective - III)

Time : 2½ Hours] *[Max. Marks : 70*

Instructions to the candidates:

1) ***Solve Q.1 or Q.2, Q.3 or Q.4, Q.5 or Q6, Q.7 or Q.8.***
2) ***Figures to the right indicate full marks.***
3) ***Assume the suitable data, if necessary.***

Q1) a) Explain the importance of frequency offset estimation in wireless comunication? What are the common methods, for frequency offset correction in software-defined radio? **[8]**

b) What are the challenges of multirate DSP in SDR? Explain. **[8]**

OR

Q2) a) Explain how OFDM is implemented in software-defined radio systems, state its advantages. **[8]**

b) Explain the concept of sample timing recovery and its importance in SDR. **[8]**

Q3) a) Identify the emerging trends and technologies that shape the future of wireles networks. **[9]**

b) Breifly explain the significance of IEEE 1900.x standards in Cognitive Radio standardization. How do these standards contribute to in the field of cognitive Radio? **[9]**

OR

Q4) a) Explain elastic spectrum management and compare it with traditional spectrum management. **[9]**

b) Describe the historical development of Cognitive Radio and explain two applications where Cognitive Radio technology is beneficial. **[9]**

Q5) a) What is Spectrum Brokering? Explain Spectrum Brokering Services information Modelling. **[9]**

b) Explain how is the statistical characterization of node locations utilized in topology-aware CRN architectures? **[9]**

OR

P.T.O.

Q6) a) Draw and explain the architecture of cognitive radio. **[9]**

b) Explain the term "Value of Perfect Information" in Cognitive Radio. How does perfect information enhance decision-making in a CRN? **[9]**

Q7) a) Explain in brief the benefits and applications of cognitive radio. **[9]**

b) Write short notes on **[9]**

i) System Spectral Efficiency

ii) Anti-Jamming

OR

Q8) a) Briefly describe the characteristics of commercial wireless communication networks. How Cognitive Radio improves the performance of commercial wireless networks? **[9]**

b) Explain Public Safety Communication, TETRA and C2000. **[9]**

❋ ❋ ❋

Total No. of Questions : 8]

SEAT No. :

PB-2313

[Total No. of Pages : 2

[6263]-157
B.E.(Electronic Engineering)
MOBILE COMMUNICATION
(2019 Pattern) (Semester - VII) (404205 A) (Elective - IV)

Time : 2½ Hours] *[Max. Marks : 70*

Instructions to the candidates:

1) ***Answer Q1 or Q2, Q3 or Q4, Q5 or Q6, Q7 or Q8.***
2) ***Neat diagrams must be drawn wherever necessary.***
3) ***Figures to the right side indicate full marks.***
4) ***Use of calculator is allowed.***
5) ***Assume suitable data if necessary.***

Q1) a) Differentiate between equalizer and diversity techniques. **[6]**

b) With neat diagram explain the operation of RAKE receiver. **[8]**

c) Explain with neat diagram BPSK receiver. **[6]**

OR

Q2) a) What is mean by diversity Technique? Explain Space Diversity methods. **[6]**

b) With neat diagram explain the working of Linear Transversal equalizer structure. **[6]**

c) Explain with neat diagram the working of QPSK Transmitter and Receiver. **[8]**

Q3) a) Explain in details AMPS radio interface with diagram. **[8]**

b) Draw and explain GSM Architecture in details. **[8]**

OR

Q4) a) Draw and explain GSM burst structure. **[8]**

b) Explain in details Call processing of Mobile terminated call in AMPS. **[8]**

P.T.O

Q5) a) Write short note on EVDO. **[8]**

b) Explain the concept packet data transport process flow. Explain with diagram simple IP. **[8]**

OR

Q6) a) Explain different radio network components use in CDMA 2000. **[8]**

b) Explain generic architecture of TD-SCDMA. **[8]**

Q7) a) Explain in details with diagram Packet Switching method. **[6]**

b) Write note on distributed database for mobility management. **[6]**

c) Draw the layer architecture of protocol SS7 and explain it. **[6]**

OR

Q8) a) With neat diagram explain network architecture for UMTS. **[6]**

b) Explain with diagram Circuit Switching method. **[6]**

c) Draw and explain X.25 protocol in details. **[6]**



Total No. of Questions : 8]

SEAT No. :

[Total No. of Pages : 2

PB-2314

[6263]-158
B.E.(Electronics Engineering)
EMBEDDED SYSTEMS
(2019 Pattern) (Semester - VII) (404205 B) (Elective - IV)

Time : 2½ Hours] ***[Max. Marks : 70***

Instructions to the candidates:

1) ***Answer Q1 or Q2, Q3 or Q4, Q5 or Q6, Q7 or Q8.***
2) ***Neat diagrams must be drawn wherever necessary.***
3) ***Assume necessary data when required.***
4) ***Figure to the right side indicate full marks.***

Q1) a) Explain foreground & background RTOS. **[6]**

b) Explain: **[6]**

i) Semaplore

ii) Mutex

iii) Mutual exclusion

c) Describe memory management in RTOS. **[6]**

OR

Q2) a) Describe priority inversion problem in RTOS with example. **[6]**

b) Describe different scheduling algorithms in RTOS. **[8]**

c) Explain interrupt, interrupt service Routine in RTOS. **[4]**

Q3) a) Describe the selection criteria for RTOS in the development of any embedded system. **[6]**

b) Write advantages & disadvantages of embedded Linux RTOS. **[6]**

c) Compare embedded system with real time operating system. **[5]**

OR

P.T.O

Q4) a) Write types of RTOS. Explain any one. **[6]**

b) Compare Vx works with micro/OS RTOS. **[6]**

c) Write the features of QNX Neutrino. **[5]**

Q5) a) Describe the important factors in embedded system project management. **[6]**

b) Draw & explain block diagram of emulator. **[6]**

c) Compare CRO with logic analyzer. **[5]**

OR

Q6) a) List & explain two software tools used in embedded system. **[6]**

b) Describe factors/issues in the design of embedded system. **[6]**

c) Draw & explain block diagram of In circuit emulator. **[5]**

Q7) a) Explain coding steps of embedded system in Automatic chocolate vending machine. **[6]**

b) Compare embedded system design factors in Automatic chocolate vending machine & Bank ATM system. **[6]**

c) Explain the coding steps of Adaptive Cruise Control embedded system. **[6]**

OR

Q8) a) Describe embedded system requirements for smart card. **[6]**

b) Explain features of embedded system in TCP/IP network for stream transmission as compare to other embedded system. **[6]**

c) Describe embedded system block schematic of Adaptive Cruise Control system. **[6]**

☺☺☺

Total No. of Questions : 8]

SEAT No. :

PB2315

[Total No. of Pages : 2

[6263]-160
B.E. (Electronics)
PROCESS INSTRUMENTATION
(2019 Pattern) (Semester - VIII) (404210)

Time : 2½ Hours] *[Max. Marks : 70*

Instructions to the candidates:

1) ***Answer Q.1 or Q.2, Q.3 or Q.4, Q.5 or Q.6, Q.7 or Q.8.***
2) ***Neat diagrams must be drawn wherever necessary.***
3) ***Figures to the right indicate full marks.***
4) ***Assume suitable data, if necessary.***
5) ***Use of non-programmable scientific calculator is allowed.***

Q1) a) Explain OP-AMP realization of three mode (PID) controller with the help of neat circuit diagram and output voltage expression. **[6]**

b) Explain open loop transient response method of process control loop tuning. Draw process reaction graph and state the formulae for P, P+I and PID controller settings. **[6]**

c) In an application of the Ziegler-Nichols method, a process begins oscillation with a 30% proportional band in an 11.5-min period. Find the nominal three-mode controller settings. **[6]**

OR

Q2) a) Describe an op amp circuit that will implement the proportional-derivative control mode. **[6]**

b) Explain the concept of relay based tuning. State the advantages of relay based tuning. **[6]**

c) Design a proportional-integral controller with a proportional band of 30% and an integration gain of 0.1%(%–s). The 4 to 20-mA input converts to a 0.4 to 2-V signal, and the output is to be 0-10V. Calculate values of G_p, G_I, R_2, R_1, and C, respectively. **[6]**

Q3) a) Explain with the help of neat block diagrams the concept of feedback control and feed-forward control. **[6]**

b) Explain cascade control system with the help of suitable example. **[6]**

c) Explain auctioneering control scheme of tubular catalytic reactor. **[6]**

OR

P.T.O.

Q4) a) Explain ratio control for a chemical reactor when the ratio of two reactants must be controlled. **[6]**

b) Explain selective control scheme to protect process equipment. **[6]**

c) Explain split range control scheme with suitable example. **[6]**

Q5) a) What is Adaptive Control? Why do we need adaptive control? Explain programmed or Scheduled Adaptive Control System. **[9]**

b) Explain with the help of neat block diagram Model Reference Adaptive Control (MRAC). **[8]**

OR

Q6) a) Explain the concept Model Predictive Control (MPC) with the help of neat block diagram. **[9]**

b) Explain Internal Model Control (IMC) for a First Order with Dead Time process. **[8]**

Q7) a) Explain safety layers employed to ensure safety in chemical process plants. **[9]**

b) Explain how plant performance is monitored in a typical process industry. **[8]**

OR

Q8) a) Explain the hierarchy of control structure. **[9]**

b) Explain the steps involved in defining the problem in process control design. **[8]**

◀▶ ◀▶ ◀▶

Total No. of Questions: 8]

SEAT No. : ____

PB2316

[Total No. of Pages :2

[6263]-162
B.E. (Electronics Engineering)
BIOMEDICAL ELECTRONICS
(2019 Pattern) (Semester-VIII) (Elective-V) (404211A)

Time : 2½ Hours] ***[Max. Marks : 70***

Instructions to the candidates:

1) ***Answer Q.1 or Q.2, Q.3 or Q.4, Q5 or Q6, Q7 or Q8.***
2) ***Figures to the right side indicate full marks.***
3) ***Assume suitable data, if necessary.***

Q1) a) Draw and explain 10-20 electrode system for EEG recording. **[6]**

b) Draw and explain block diagram of EEG. **[6]**

c) Draw and explain block diagram of EMG Machine. **[6]**

OR

Q2) a) Draw and explain 10-20 electrode system for EEG recording. **[6]**

b) List various EEG waves with their frequency. **[6]**

c) What are the different components of central nervous system? Explain in detail. **[6]**

Q3) a) Describe operation of DC defibrillator with circuit diagram and wave form. **[9]**

b) Write difference between external and internal Pacemaker? **[8]**

OR

Q4) a) Draw the block diagram central monitoring system. Explain it in detail. **[9]**

b) Explain Systolic & Diastolic Blood pressure? **[8]**

Q5) a) Name different methods for blood cell counting. Explain coulter counters in detail. **[9]**

b) Describe the working of Flame Photometer. **[8]**

OR

P.T.O.

Q6) a) Write short note on colorimeter. **[9]**

b) Discuss various issue of noise pollution around Hospital. **[8]**

Q7) a) Write a working principle of MRI. How does an MRI scanner work? **[6]**

b) Explain CT scanner working principle and scanning system. **[6]**

c) Explain Telemetry System for biomedical application in detail? **[6]**

OR

Q8) a) Explain operation of X-ray machine with help of neat block diagram **[6]**

b) Explain merits & demerits of MRI system. **[6]**

c) What is the need of Telemetry System Explain with Example? **[6]**



Total No. of Questions: 8]

SEAT No. : ____

PB2317

[Total No. of Pages :2

[6263]-163

B.E. (Electronics Engineering)

ARTIFICIAL INTELLIGENCE AND NEURAL NETWORK

(2019 Pattern) (Semester-VIII) (Elective-V) (404211 (B))

Time : 2½ Hours] ***[Max. Marks : 70***

Instructions to the candidates:

1) ***Answer Q.1 or Q.2, Q.3 or Q.4, Q5 or Q6, Q7 or Q8.***
2) ***Neat diagrams must be drawn wherever necessary.***
3) ***Assume suitable data if necessary.***
4) ***Use of non-programmable scientific calculator is allowed.***

Q1) a) What is Normalization? Explain its type. **[6]**

b) Write short note on Risk minimization and optimization in Neural network. **[6]**

c) Write short note on Loss function and hyper parameter? **[6]**

OR

Q2) a) Explain Vanishing Gradient Problem. **[6]**

b) Draw and explain Architecture of Back Propagation Networks. **[6]**

c) Explain Methods to avoid Overfitting and under fitting. **[6]**

Q3) a) Write short note on Threshold Function and Hyperbolic Tangent Function. **[6]**

b) Explain Components of Convolutional Neural Network. **[6]**

c) Describe Fully connected layer and softmax classification. **[6]**

OR

Q4) a) Draw and explain Architecture of Convolutional Neural Network. **[6]**

b) Explain application of Convolutional Neural Network in detail. **[6]**

c) Explain Convolution layer and pooling layer of CNN. **[6]**

P.T.O.

Q5) a) Describe Different Recurrent neural network Architecture. **[9]**

b) Explain Two issues of Standard Recurrent Neural Network. **[8]**

OR

Q6) a) Explain Application, Advantages and disadvantages of Recurrent Neural Network. **[9]**

b) Explain Recurrent Neural Network. Also Describe Need of Recurrent Neural Network. **[8]**

Q7) a) Explain application of Deep learning in detail. **[9]**

b) Describe Handwritten Digit Recognition using CNN. **[8]**

OR

Q8) a) Explain Speech recognition using deep learning. **[9]**

b) Explain How to Build and Train of Convolutional Neural Network in Python. **[8]**



Total No. of Questions: 8]

SEAT No. : ____

PB2318

[Total No. of Pages :2

[6263]-164
B.E. (Electronics Engineering)
AUDIO VIDEO ENGINEERING
(2019 Pattern) (Semester-VIII) (Elective-V) (404211 (C))

Time : 2½ Hours] ***[Max. Marks : 70***

Instructions to the candidates:

1) ***Answer Q.1 or Q.2, Q.3 or Q.4, Q5 or Q6, Q7 or Q8.***
2) ***Neat diagrams must be drawn wherever necessary.***
3) ***Figurs to the right indicate full marks.***
4) ***Use of logarithmic tables slide rule, Electronic pocket Calculator is allowed.***
5) ***Assume suitable data if necessary.***

Q1) a) Compare 4K and 8K standers of UHDTV. **[8]**

b) Write a short note on Camcorder and Webcam. **[9]**

OR

Q2) a) Explain 3D TV in detail. **[8]**

b) Draw and explain block diagram of smart TV. **[9]**

Q3) a) Explain MPEG-2 Video compression standards in detail. **[6]**

b) Write a short note on video streaming. **[6]**

Draw and explain block diagram of DTH. **[6]**

OR

Q4) a) Explain with block diagram of digital TV Transmitter **[6]**

b) Compare EDTV, SDTV, HDTV. **[6]**

c) Explain MAC receiver of digital TV with suitable diagram. **[6]**

Q5) a) Explain working principle of cone type loudspeaker with neat diagram. **[8]**

b) Draw and explain the block diagram of PA system **[9]**

OR

P.T.O.

Q6) a) Explain PA system installation plan for an auditorium having large capacity. **[8]**

b) Explain with neat diagram working of condenser microphone? State its applications. **[9]**

Q7) a) Draw and explain the block diagram of a CD player. **[6]**

b) Compare CD, DVD and Blue Ray DVD. **[6]**

c) Write a short note on MP3 Player. **[6]**

OR

Q8) a) Explain with neat block diagram and working of DVD Player. What are the various output connecters available for DVD.? Enlist the capacities of DVD available in market. **[9]**

b) With the help of neat diagram explain the variable density method of recording of sound films. **[9]**



Total No. of Questions: 8]

SEAT No. :

PB2319

[Total No. of Pages :2

[6263]-165
B.E. (Electronics)
AUTOMOTIVE ELECTRONICS
(2019 Pattern) (Semester-VIII) (Elective-V) (404211D)

Time : 2½ Hours] ***[Max. Marks : 70***

Instructions to the candidates:

1) ***Answer Q.1 or Q.2, Q.3 or Q.4, Q5 or Q6, Q7 or Q8.***
2) ***Neat diagrams must be drawn wherever necessary.***
3) ***Assume suitable data id necessary.***

Q1) a) Explain construction and working of electronic power steering system. **[10]**

b) Explain how look-up tables and maps are generated in engine control System? **[8]**

OR

Q2) a) Outline the tool-chain process generally required to program a microcontroller and explain each process in detail. **[10]**

b) What is the purpose of magnetic reluctance position sensor? Classify actuators based on motion. **[8]**

Q3) a) Discuss in detail about D2B and DSI communication protocol. **[10]**

b) What is General Packet Radio Service (GPRS) and its use in automotive. **[8]**

OR

Q4) a) What is need of MOST? List devices that can be connected and BW requirement of each. **[10]**

b) Compare various types of automotive buses. **[8]**

Q5) a) How the tyre pressure and brake pressure are measured in automobiles control systems? **[10]**

b) Explain damper control and automatic rain operated wiper control. **[8]**

OR

P.T.O.

Q6) a) What are the challenges of model based development in automotive industry? **[10]**

b) Explain procedure to analyze the costs and benefits of model-based software development in automotive industry. **[8]**

Q7) a) Explain various types of diagnostics techniques. **[8]**

b) Describe with neat sketch traction control integrated with ABS. **[8]**

OR

Q8) a) Explain necessity of functional safety. Compare active safety & passive safety. **[8]**

b) Comment on knowledge needed for accurate fault diagnostics. **[8]**



Total No. of Questions : 8]

SEAT No. :

PB2320

[Total No. of Pages :2

[6263]-168

B.E. (Electronics Engineering)

RENEWABLE ENERGY SYSTEM AND DSM

(2019 Pattern) (Semester-VIII) (Elective - VI) (404212 A)

Time : 2½ Hours] *[Max. Marks : 70*

Instructions to the candidates:

1) ***Answer Q.1 or Q.2, Q.3 or Q.4, Q.5 or Q.6, Q.7 or Q.8.***
2) ***Figures to the right indicate full marks.***
3) ***Assume suitable data, if necessary.***

Q1) a) Draw and explain characteristics of Power vs Speed and TSR. Explain Maximum power operation of wind power system. **[6]**

b) List the various types of Wind Energy Conversion System (WECS): Explain Hybrid WECS System in detail. **[6]**

c) Compare fixed speed and variable speed wind power system. **[6]**

OR

Q2) a) Explain the principle of wind energy conversion system. State the basic Components of WECS and their role in WECS. **[6]**

b) Explain following mechanical controls used in Wind Energy Conversion System (WECS) **[6]**

i) Pitch Control

ii) Yaw Control

c) Enlist the different types of wind generators. Explain working of any one in detail. **[6]**

Q3) a) Explain Municipal Solid Waste Management in Detail. **[8]**

b) With suitable sketch explain an anaerobic digestion method of producing biogas from resources. **[9]**

OR

P.T.O.

Q4) a) Explain the operation of Biofuel Production with the help of suitable schematic diagram.fermentation process. **[9]**

b) What are the biomass conversion technologies? Explain any one in detail. **[8]**

Q5) a) Write three important components of a tidal power plant. Briefly explain the Kaplan type turbine with working range of water head. **[9]**

b) Discuss the various ways of geothermal power generation. **[8]**

OR

Q6) a) Describe the closed cycle Ocean Thermal Energy Conversion system(OTEC) and mention its advantages and limitations. **[9]**

b) Write short notes on: **[8]**

i) Tidal energy

ii) Wave energy

Q7) a) What is DSM? Explain various components of DSM and their role. **[6]**

b) Explain Technology options for DSM in **[6]**

i) Lightning

ii) Space cooling(Ceiling Fan, AC system)

iii) Refrigeration and Water cooling)

c) Explain architecture for DR implementation, Energy management system **[6]**

OR

Q8) a) Explain various load shape curves with suitable graphical representation **[6]**

b) What id Demand Response? Classify various DR options. **[6]**

c) What is the role of communication infrastructure? Explain MDMS, DRAS (Server & client). **[6]**

Total No. of Questions : 8]

SEAT No. :

PB2321

[Total No. of Pages : 2

[6263]-169

B.E. (Electronics Engineering)

WIRELESS SENSOR NETWORK

(2019Pattern) (Semester - VIII) (Elective - VI) (404212 B)

Time : 2½ Hours] *[Max. Marks : 70*

Instructions to the candidates:

1) ***Answer Q.1 or Q.2, Q.3 or Q.4, Q.5 or Q.6, Q.7 or Q.8.***
2) ***Figures to the right side indicate full marks.***
3) ***Assume suitable data, if necessary.***

Q1) a) State key features of Bluetooth Low Energy (BLE) protocol. State advantages, disadvantages of Bluetooth Low Energy (BLE) protocol. **[6]**

b) Write short note on 6LoWPAN protocol. **[6]**

c) Explain Zigbee protocol in detail with architecture. **[8]**

OR

Q2) a) List key features of Wibree protocol/standard. State advantages, disadvantages of Wibree protocol/standard. **[6]**

b) Explain architecture of Wireless HART protocol/standard. **[6]**

c) Explain the structure of Z-wave Protocol stack. **[8]**

Q3) a) Explain range-based localization and range free localization in wireless sensor networks. **[8]**

b) Explain single hop and multi hop wireless sensor networks with the help of diagram. **[8]**

OR

Q4) a) Define localization in wireless sensor network. Explain types of location information in WSN. Explain proximity Schemes for localization in WSN. **[8]**

b) What is routing in wireless sensor networks? Explain full-network broadcast routing protocol with flow diagram. **[8]**

Q5) a) Explain goal oriented attacks and layer oriented attacks in wireless sensor network. **[8]**

b) Explain defensive measures for attacks in physical layer and data link layer in WSN. **[8]**

OR

P.T.O.

Q6) a) Explain Statistical analysis in wireless sensor network. Explain compressive sampling in statistical analysis in wireless sensor network. **[8]**

b) Explain the following types of clustering in WSN **[8]**

i) Random Clustering in WSN

ii) Nearest Sink Clustering in WSN

Q7) a) Explain early WSN deployments in brief. Explain the requirement analysis in WSN. **[6]**

b) Explain the top-down design process of deployment of WSN. **[6]**

c) Explain semantic problems and global problems in deployments of wireless sensor network. **[6]**

OR

Q8) a) Explain link/path problems and topology problems in deployments of wireless sensor network. **[6]**

b) What is deployment in wireless sensor network? Explain early WSN deployment with example. **[6]**

c) What is meant by deployment of wireless senor networks? Explain typical life cycle of wireless sensor network application. **[6]**



Total No. of Questions : 8]

SEAT No. :

PB2322

[Total No. of Pages :2

[6263]-170
B.E. (Information Technology)
INFORMATION AND STORAGE RETRIEVAL
(2019 Pattern) (Semester-VII) (414441)

Time : 2½ Hours] *[Max. Marks : 70*

Instructions to the candidates:

1) ***Answer Q.1 or Q.2, Q.3 or Q.4, Q.5 or Q.6, Q.7 or Q.8.***
2) ***Neat diagrams must be drawn wherever necessary.***
3) ***Figures to the right indicate full marks.***
4) ***Assume suitable data, if necessary.***

Q1) a) Define Query. What are various techniques used to specify query in information visualization? **[9]**

b) Define and explain following terms **[9]**

i) Precision

ii) Recall

iii) F-Score

OR

Q2) a) What are User oriented measures used in performance evaluation of IR systems. **[9]**

b) Define and explain following terms- **[9]**

i) MRR

ii) NDCG

iii) E-measure

Q3) a) What is Distributed IR? Explain in detail automatic feature extraction in Distributed IR. **[9]**

b) Describe Multimedia data support in Commercial DBMS. **[8]**

OR

Q4) a) What is multimedia IR? Explain GEMINI Approach for Multimedia IR? **[9]**

b) Explain in detail Multimedia Office Server (MULTOS). **[8]**

P.T.O.

Q5) a) Explanation of search engine mechanism- [4 M] Diagram- [2 M]. **[6]**

b) Explain Crawler-Index Architecture with a diagram. **[6]**

c) Write a note on request module and beautiful soup library. **[6]**

OR

Q6) a) Write a short note on Web Scraping. **[6]**

b) What is page ranking? Explain importance of page ranking in detail. **[6]**

c) What are the different components of Web crawler. **[6]**

Q7) a) Compare Text- Centric and Data-Centric XML retrieval. **[9]**

b) Explain Vector space Model for XML Retrieval. **[8]**

OR

Q8) a) Define Recommender system. Explain in brief Content based recommendation. **[9]**

b) Differentiate between collaborative system and content based filtering system. **[8]**

Total No. of Questions : 8]

SEAT No. :

PB2323

[Total No. of Pages : 2

[6263]-171

B.E. (Information Technology)

SOFTWARE PROJECT MANAGEMENT

(2019 Pattern) (Semester - VII) (414442)

Time : 2½ Hours] ***[Max. Marks : 70***

Instructions to the candidates:

1) ***Answer Q1 or Q2, Q3 or Q4, Q5 or Q6, Q7 or Q8.***
2) ***Neat diagrams must be drawn wherever necessary.***
3) ***Figures to the right side indicate marks.***
4) ***Assume suitable data, if necessary.***

Q1) a) Describe IT Project Risk Identification Framework. Explain the types of risk with examples. **[9]**

b) How do Network Diagrams help in Project Planning? Define Predecessor, Successor, and Parallel Activities. Give a real-world example of each.**[9]**

OR

Q2) a) Explain objectives of activity planning in detail with suitable example.**[9]**

b) List different project scheduling Techniques? Explain the Difference between CPM and PERT. **[9]**

Q3) a) What are the different tools and methods used for monitoring and regulating project operations? **[8]**

b) What are the different methods used in visualizing progress. Explain in detail **[9]**

OR

Q4) a) Explain version control and change control process in SCM with neat diagram. **[8]**

b) Explain plan monitor control cycle used in the project in detail with example. **[9]**

P.T.O.

Q5) a) How to select a right person for the job? Explain the recruitment process in detail. **[9]**

b) What is Leadership? Explain Different approaches of leadership. **[9]**

OR

Q6) a) Explain Oldham-Hackman job characteristic model. **[9]**

b) With relevant examples, differentiate between management and leadership. **[9]**

Q7) a) Explain any four metrics used for developer practices? **[6]**

b) Define Application Lifecycle Management (ALM) tools? What feature should be considered while choosing an ALM Tools? List some examples of ALM tools? **[6]**

c) List any four examples of reports for metrics in agile projects? **[5]**

OR

Q8) a) Explain application life cycle with its phases? **[6]**

b) What is visibility in DevOps? What are the different ways to enable the visibility in Azure DevOps? **[6]**

c) What is Azure Borad? Explain with suitable example? **[5]**



Total No. of Questions : 8]

SEAT No. :

PB-2324

[Total No. of Pages : 2

[6263]-172

B.E. (Information Technology)

DEEP LEARNING

(2019 Pattern) (Semester - VII) (414443)

Time : 2½ Hours] *[Max. Marks : 70*

Instructions to the candidates :

1) ***Answer Q.1 or Q.2, Q.3 or Q.4, Q.5 or Q.6, Q.7 or Q.8.***
2) ***Neat diagrams must be drawn wherever necessary.***
3) ***Figures to the right side indicate full marks.***
4) ***Assume suitable data, if necessary.***

Q1) a) Write a short note on Long Short-Term Memory Networks (LSTM). **[9]**

b) Explain how sequence to sequence model works. **[9]**

OR

Q2) a) Differentiate between Feed-Forward Neural Networks Vs Recurrent Neural Networks. Explain the types of Recurrent Neural Network (RNN). **[9]**

b) Explain the components of a Long Short-Term Memory Networks (LSTM) and Advantages of LSTM. **[9]**

Q3) a) Explain the architecture of undercomplete autoencoder. What is the difference between undercomplete autoencoder and sparse autoencoder? **[9]**

b) What are Denoising Autoencoders. Why it is used? **[8]**

OR

Q4) a) How do Autoencoders work? What are the applications of autoencoder? **[9]**

b) What is a Bottleneck in autoencoder and why is it used? **[8]**

P.T.O.

Q5) a) What is greedy layerwise pretraining? Explain the approaches. **[9]**

b) Why should one use transfer learning and when? **[9]**

OR

Q6) a) When Vanishing Gradient Problem Occurs? Explain in detail **[9]**

b) Explain distributed representation with example. **[9]**

Q7) a) Explain the traditional approach and deep learning approach for Automatic Speech Recognition. **[8]**

b) Explain content based, collaborative and hybrid recommender system with pros and cons. **[9]**

OR

Q8) a) Explain the following social network analysis terminologies **[8]**

i) Nodes & Ages ii) Weight

iii) Centrality Measures iv) Network Level Measures

b) How does image classification works? Describe various image classification techniques and enlist the four advantages of using deep learning in image classification. **[9]**

▽▽▽▽

Total No. of Questions : 8]

SEAT No. :

PB2325

[Total No. of Pages : 2

[6263]-173
B.E. (Information Technology)
MOBILE COMPUTING
(2019 Pattern) (Semester - VII) (414444 A) (Elective - III)

Time : 2½ Hours] *[Max. Marks : 70*

Instructions to the candidates:

1) ***Answer Q.1 or Q.2, Q.3 or Q.4, Q.5 or Q.6, and Q.7 or Q.8.***
2) ***Neat diagrams must be drawn wherever necessary.***
3) ***Figures to the right indicate full marks.***
4) ***Assume suitable data, if necessary.***

Q1) a) What is 4G and how it works? List down specification of 4G. **[8]**

b) Discuss the evolutions of Mobile Communication Technologies in detail. **[9]**

OR

Q2) a) Write short note on : Fifth generation telecommunication standard or 5G. **[8]**

b) Explain Massive MIMO technology in details. **[9]**

Q3) a) Illustrate the need of Mobile IP and its working with a diagram? **[9]**

b) Explain VANET Architecture in details. **[9]**

OR

Q4) a) Write a short note on Hybrid Routing ZRP Protocol, Explain with architecture. **[9]**

b) Why is Mobile IP packet required to be forwarded through a tunnel? Explain minimal techniques of encapsulation of Mobile packet. **[9]**

Q5) a) Explain the working of Mobile TCP and its advantages and disadvantages. **[8]**

b) Describe briefly WAP protocol stack in details. **[9]**

OR

P.T.O.

Q6) a) What is Mobile Agent? Describe different features of Mobile Agent. **[8]**

b) Compare I-TCP, Snooping TCP and Mobile TCP. **[9]**

Q7) a) Describe Application Framework of Android Operating system. **[9]**

b) Discuss any three Mobile Operating systems that are widely used in mobile phones. **[9]**

OR

Q8) a) Describe iOS Software Development Kit (SDK) in details. **[9]**

b) What is Mobile Payment? Explain types of Mobile payment in detail. **[9]**

* * *

Total No. of Questions : 8]

SEAT No. :

PB-4479

[Total No. of Pages : 2

[6263]-174R

B.E. (Information Technology)

HIGH PERFORMANCE COMPUTING

(2019 Pattern) (Semester - VII) (414444B) (Elective - III)

Time : 2½ Hours] *[Max. Marks : 70*

Instructions to the candidates:

1) ***Answer Q1 or Q2, Q3 or Q4, Q5 or Q6 or Q7 or Q8.***
2) ***Neat diagrams must be drawn wherever necessary.***
3) ***Figures to the right side indicate full marks.***
4) ***Assume suitable data, if necessary.***

Q1) a) Explain Circular shift operation on mesh and hypercube networks. **[9]**

b) Describe the Blocking vs Nonblocking communication operations with example. **[9]**

OR

Q2) a) Explain All-to-all broadcast operation on mesh and hypercube topologies. **[6]**

b) Description of Message Passing Interface (MPI) using a basic program example that demonstrates message passing. **[6]**

c) Explain One-to-all broadcast and All-to-one reduction with example. **[6]**

Q3) a) List and explain the performance metrics for parallel systems (Any 3). **[6]**

b) Consider the problem of adding n numbers on p processing elements such that $p < n$ and both n and p are powers of 2. Considering above example, explain the effect of granularity on performance. **[6]**

c) What is the minimum execution time for adding n numbers on p processing elements. **[6]**

OR

Q4) a) What do you mean by Asymptotic Analysis of Parallel Programs? Explain with an example. **[6]**

P.T.O.

b) Explain with example, how evaluation of execution time of parallel algorithm is different from sequential algorithm. **[6]**

c) What is the minimum cost-optimal execution time for adding n numbers on p processing elements. **[6]**

Q5) a) What is OpenMP and what is it used for? Explain any 4 OpenMP directives. **[8]**

b) Design and explain a simple CUDA kernel function to multiple two integers. **[9]**

OR

Q6) a) Explain with example, how does OpenMP handle task parallelism **[8]**

b) Write advantages and limitations of CUDA. Also write four applications of CUDA. **[9]**

Q7) a) Discuss any variants of Bubble Sort algorithm suitable for parallel execution. **[8]**

b) What is Monto Carlo simulation? How is it used to estimate value of PI. **[9]**

OR

Q8) a) How can Quick sort be parallelized to take advantage of multiple CPU cores or GPUs? **[8]**

b) Discuss the benefits and limitations of parallel Depth-First Search (DFS) compared to sequential DFS. **[9]**

Total No. of Questions : 8]

SEAT No. :

PB2327

[Total No. of Pages : 2

[6263]-175

B.E. (Information Technology)

MULTIMEDIA TECHNOLOGY

(2019 Pattern) (Semester - VII) (414444 C) (Elective - III)

Time : 2½ Hours] *[Max. Marks : 70*

Instructions to the candidates:

1) ***Answer Q.1 or Q.2, Q.3 or Q.4, Q.5 or Q6, Q.7 or Q.8.***
2) ***Neat diagrams must be drawn wherever necessary.***
3) ***Figures to the right indicate full marks.***
4) ***Assume Suitable data, if necessary.***

Q1) a) Explain Hearing Threshold and Masking properties of sound which governs human hearing capacity. **[8]**

b) Compare among NTSC, PAL and SECAM Television transmission standards with suitable diagrams. **[9]**

OR

Q2) a) Explain different types of MIDI messages with suitable sample messages. **[8]**

b) Why digital video is necessary? Compare various Chroma subsampling with neat diagrams. **[9]**

Q3) a) Explain keyframes and Tweening. What are types of tweening, explain with suitable diagrams. **[8]**

b) Explain different types of animation. **[9]**

OR

Q4) a) Explain various techniques for animation. **[8]**

b) Explain any Nine Principles of animation with suitable examples. **[9]**

P.T.O.

Q5) a) Differentiate between Virtual Reality and Augmented Reality. What are various forms of Virtual Reality? **[9]**

b) Discuss in detail, "Virtual Reality in HealthCare" **[9]**

OR

Q6) a) Explain any Three Virtual Reality devices in detail. **[9]**

b) Discuss in detail, "Virtual Reality in Education". **[9]**

Q7) a) Explain various multimedia communication networks in detail. **[9]**

b) Explain Realtime Transport Protocol (RTP) for communication. **[9]**

OR

Q8) a) Explain any Eight Gaming Principles. **[9]**

b) Explain architecture and characteristics of Multimedia Databases. **[9]**

❋ ❋ ❋

Total No. of Questions : 8]

SEAT No. :

PB2328

[Total No. of Pages : 2

[6263]-176
B.E. (Information Technology)
SMART COMPUTING
(2019 Pattern) (Semester - VII) (Elective - III) (414444 D)

Time : 2½ Hours] *[Max. Marks : 70*

Instructions to the candidates:

1) ***Answer Q.1 or Q.2, Q.3 or Q.4, Q.5 or Q6, Q.7 or Q.8.***
2) ***Neat diagrams must be drawn wherever necessary.***
3) ***Figures to the right side indicate full marks.***
4) ***Assume Suitable data, if necessary.***

Q1) a) How many main properties for ubiquitous computing systems were proposed by Weiser? **[9]**

b) Explain three basic types of environment for ubicom systems? **[9]**

OR

Q2) a) What does smart DEl model propose? Explain with neat diagram. **[9]**

b) Explain three advantages of ubiquitous computing? **[9]**

Q3) a) Explain three important features of smart devices in ubiquitous computing? **[9]**

b) Draw a neat diagram of service provision life cycle and explain in details **[8]**

OR

Q4) a) Explain the importance of virtualization? **[7]**

b) Write short note on (i) Service Oriented Architecture ii) Mobile Code.**[10]**

P.T.O.

Q5) a) What are the main component of a sensor? Explain with neat diagram? **[9]**

b) Discuss Micro- Electro-Mechanical Systems (MEMS) in detail? **[9]**

OR

Q6) a) Explain the significance of real time system? Explain how it is different than non-real time systems **[9]**

b) Discuss the advantages and disadvantages of Embedded system **[9]**

Q7) a) What are the different components of loT? Explain with neat diagram? **[8]**

b) Describe any one application of related with Smart Home with neat diagram? **[9]**

OR

Q8) a) Write short note on Smart Agricultural System. **[9]**

b) Enlist different characteristics of Internet of Things (loT)? **[8]**

❋ ❋ ❋

Total No. of Questions : 8]

SEAT No. :

PB-2329

[Total No. of Pages : 2

[6263]-177
B.E.I.T.
BIOINFORMATICS
(Elective - IV) (2019 Pattern) (Semester - VII) (414445A)

Time : 2½ Hours] *[Max. Marks : 70*

Instructions to the candidates:

1) ***Answer Q1 or Q2, Q3 or Q4, Q5 or Q6, Q7 or Q8.***
2) ***Neat labelled diagrams must be drawn wherever necessary.***
3) ***Figures to the right indicate full marks.***
4) ***Assume suitable data if necessary.***

Q1) a) Explain the PAM (Point Accepted Mutation) matrix and its significance in sequence alignments. Discuss how PAM matrices are constructed and their application in measuring sequence similarities. **[8]**

b) Compare and contrast local alignment and global alignment techniques in sequence alignments. Discuss their respective uses and advantages in different biological scenarios. **[9]**

OR

Q2) a) Discuss and state the difference between global and local alignments methods? **[8]**

b) Explain the statistical concepts used in analyzing microarray data. Discuss the principles of normalization, statistical significance testing and gene expression analysis in the context of microarray experiments? **[9]**

Q3) a) Explain the concept of classification algorithms and their role in predicting and classifying biological data. Provide examples of classification algorithms commonly used in bioinformatics. **[9]**

b) Discuss the BLAST algorithm and its significance in bioinformatics. **[9]**

OR

Q4) a) Describe the FASTA algorithm and its application in sequence alignment. Provide an example to illustrate how the algorithm works. **[9]**

b) Explain the concept of Hidden Markov Models (HMMs) in bioinformatics. Discuss their applications in sequence analysis and prediction. **[9]**

P.T.O

Q5) a) What are the applications of bioinformatics in the drug discovery process? Provide examples of how bioinformatics tools and techniques are utilized to analyze biological data and facilitate drug discovery. **[8]**

b) Describe the process of modeling and simulation in drug discovery. Discuss how computational methods and simulations contribute to the understanding of drug behavior and efficacy. **[9]**

OR

Q6) a) Describe the hierarchical organization of protein structure and provide an example illustrating each level of organization. **[8]**

b) Explain the concept of drugs and the drug discovery process. Discuss the key steps involved in discovering and developing new drugs. **[9]**

Q7) a) Describe the process of genetic engineering and its applications in agriculture. Discuss the potential benefits and concerns associated with genetically modified organisms (GMOs). **[9]**

b) What is the role of biotechnology in environment? **[9]**

OR

Q8) a) Discuss the emerging trends and advancements in medical technology that are shaping the future of medicine. Include topics such as precision medicine, personalized therapies and the integration of artificial intelligence in healthcare. **[9]**

b) What are some everyday applications of nanotechnology in various aspects of our lives? **[9]**



Total No. of Questions : 8]

SEAT No. : [ ]

PB2330

[Total No. of Pages : 2

[6263]-178

B.E. (Information Technology)

INTRODUCTION TO DEVOPS

(2019 Pattern) (Semester-VII) (Elective-IV) (414445B)

Time : 2½ Hours] ***[Max. Marks : 70***

Instructions to the candidates:

1) ***Answer Q1 or Q2, Q3 or Q4, Q5 or Q6, Q7 or Q8.***
2) ***Neat diagrams must be drawn wherever necessary.***
3) ***Figures to the right side indicate marks.***
4) ***Assume suitable data, if necessary.***

Q1) a) Explain role of continuous integration server. What operations a CI server can executes? **[6]**

b) What are benefits of Continuous Integration (CI) and Continuous Delivery (CD)? **[6]**

c) What is build stage? Write step wise process to generate builds? **[6]**

OR

Q2) a) Why do we need continuous database integration in DevOps? List the tools used for Continuous Integration in DevOps. **[6]**

b) Explain various Strategies for Continuous Delivery. **[6]**

c) How does continuous integration affect product quality and marketing timing? **[6]**

Q3) a) Explain the role of Integration testing in DevOps? How it is different from conventional testing. **[5]**

b) What are the four main stages of a deployment pipeline? **[4]**

c) Explain the Trade-offs in the deployment pipeline with details. **[8]**

OR

P.T.O.

Q4) a) Explain the different types of tests. **[5]**

b) List and explain the strategies which are useful to manage defects list? **[4]**

c) Explain the Deployment pipeline practices along with Commit stage. **[8]**

Q5) a) Justify the use of Continuous Monitoring System in DevOps? List the factors involved in Monitoring System. **[6]**

b) Differentiate white-box and black-box monitoring. **[6]**

c) What is Site Reliability Engineering? List common Tools used for SRE. **[6]**

OR

Q6) a) What is Monitoring System? How to create dashboard in Monitoring? **[6]**

b) Discuss monitoring infrastructure and applications. **[6]**

c) What is Behaviour-Driven Monitoring? How it works? **[6]**

Q7) a) What is version control? How Git Hub is used in version control? **[6]**

b) Write short note on Kubernetes. **[6]**

c) Explain the role of Jenkins in Continuous Integration and Continuous Delivery. **[5]**

OR

Q8) a) Describe the use of Prometheus for monitoring in DevOps. **[6]**

b) What is advantage of container based application in product development? How Docker is used to build applications? **[6]**

c) What is bug tracking? Comment on tools used for bug tracking. **[5]**

● ● ●

Total No. of Questions : 8]

SEAT No. :

PB2331

[Total No. of Pages : 2

[6263]-179

B.E. (Information Technology)

COMPUTER VISION

(2019 Pattern) (Semester-VII) (Elective-IV) (414445C)

Time : 2½ Hours] *[Max. Marks : 70*

Instructions to the candidates:

1) ***Answer Q.1 or Q.2, Q.3 or Q.4, Q.5 or Q.6, Q.7 or Q.8.***
2) ***Neat diagrams must be drawn wherever necessary.***
3) ***Figures to the right indicate full marks.***
4) ***Assume Suitable data if necessary.***

Q1) a) List the different algorithms or methods used for rectangle detection. **[9]**

b) Compare between Feature Tracking and Feature Detection? **[9]**

OR

Q2) a) Explain how Sobel edge detection operator is derived in detail. What type of edges are detected using it? **[9]**

b) Identify Key Challenges in Edge Detection for Computer Vision? **[9]**

Q3) a) Assess the effectiveness and accuracy of the foot-of-normal method in different scenarios and propose enhancements or modifications for specific use cases. **[9]**

b) Evaluate the impact of image noise, resolution, and lighting variations on the accuracy of ellipse detection methods. **[8]**

OR

Q4) a) Compare and contrast the Hough Transform with other line detection methods in computer vision, discussing their advantages and disadvantages. **[9]**

b) What is meant by feature collation? How GHT is used for feature collation? **[8]**

P.T.O.

Q5) a) What is mean by Dimensionality Reduction? Which method is used for dimensionality reduction in unsupervised learning? Explain. **[9]**

b) Critically analyze the limitations and challenges associated with 3D reconstruction in computer vision. **[9]**

OR

Q6) a) Assess the effectiveness and accuracy of a chosen 3D vision method in different scenarios and propose recommendations for its optimal use.**[9]**

b) Explain Structure from Motion (SFM) and triangulation in computer vision, and their significance in generating 3D reconstructions from images. **[9]**

Q7) a) Can you outline how varying factors, such as lighting or facial expressions, might influence the effectiveness of Eigen faces in face recognition? **[9]**

b) List the essential geometric concepts crucial in surveillance applications within computer vision. **[8]**

OR

Q8) a) Explain how the views of multiple cameras are combined. **[9]**

b) Apply Chamfer Matching to recognize a specific object in an image, detailing the step- by-step process involved in the recognition. **[8]**

Total No. of Questions : 8]

SEAT No. :

PB2332

[Total No. of Pages : 2

[6263]-180

B.E. (Information Technology)

WIRELESS COMMUNICATIONS

(2019 Pattern) (Semester-VII) (Elective-IV) (414445 D)

Time : 2½ Hours] *[Max. Marks : 70*

Instructions to the candidates:

1) ***Answer Q.1 or Q.2, Q.3 or Q.4, Q.5 or Q.6, Q.7 or Q.8.***
2) ***Neat diagrams must be drawn wherever necessary.***
3) ***Figures to the right indicate full marks.***
4) ***Assume suitable data if necessary.***

Q1) a) What are advantages of OFDM technique? Explain in detail OFDM technique. **[9]**

b) What is TDMA? Explain how Time Division Multiple Access is useful in Wireless communication with suitable example. **[9]**

OR

Q2) a) What is MIMO? Explain two formats of MIMO. **[9]**

b) What do you understand by IDMA (Interleave Division Multiple Access)? Discuss in detail. **[9]**

Q3) a) What is NFC? What are the different characteristics of NFC? **[9]**

b) Explain in details SigFox protocol. **[8]**

OR

Q4) a) Explain in details WAP architecture with neat diagram. **[9]**

b) What is LoRaWAN? Elaborate LoRaWAN network elements. **[8]**

P.T.O.

Q5) a) Explain security issues and challenges in GSM. **[9]**

b) What are Wireless Security tools? Explain URH and Kismet in details. **[9]**

OR

Q6) a) Explain in detail UMTS Security. **[9]**

b) Explain in details Multimedia security in 5G and 6G. **[9]**

Q7) a) What is 5G NR (New Radio)? Explain working 5G NR in detail. **[9]**

b) Explain Simultaneous Transmission and Reflection (STAR) for 360º coverage in details. **[8]**

OR

Q8) a) What is quantum Technology? Explain quantum Technology for a 5G/6G wireless network? **[9]**

b) Enlist and explain application of Holographic MIMO surface. **[8]**

● ● ●

Total No. of Questions : 8]

SEAT No. :

PB-2333

[Total No. of Pages : 2

[6263]-181
B.E. (Information Technology)
DISTRIBUTED SYSTEMS
(2019 Pattern) (Semester - VIII) (414450)

Time : 2½ Hours] *[Max. Marks : 70*

Instructions to the candidates :

1) ***Answer Q.1 or Q.2, Q.3 or Q.4, Q.5 or Q.6, Q.7 or Q.8.***
2) ***Figures to the right side indicate full marks.***
3) ***Neat diagrams must be drawn wherever necessary.***
4) ***Assume suitable data, if necessary.***

Q1) a) Explain external data representation (XDR), marshalling and unmarshalling. Why is XDR required? Discuss in brief the three alternative approaches to external data representation. **[8]**

b) Describe the overlay network and its benefits? Explain it with the help of Skype overlay architecture. **[9]**

OR

Q2) a) What are the advantages of logical clock over physical clock? Consider Figure 1 that shows four processes (P1, P2, P3, P4) with events a, b, c, ... and messages communicating between them. Assume that initial logical clock values are all initialized to 0. List the Lamport timestamps for each event shown in Figure 1. Assume that each process maintains a logical clock as a single integer value as a Lamport clock. Provide timestamps for each labeled event. **[8]**

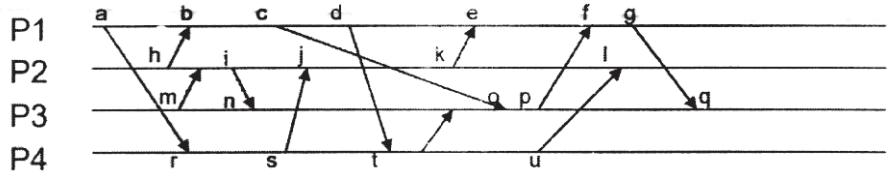

Figure 1 : Four Processes P1, P2, P3, P4 run events a, b, c, d ..... to send and receive messages

b) What is the need of mutual exclusion? Explain the permission-based centralized distributed mutual exclusion algorithm. **[9]**

P.T.O.

Q3) a) Why replication is important and how it relates with Scalability? How are replicas kept consistent? Explain the mechanism of Server-Initiated Replicas with suitable example. **[9]**

b) What is fault tolerance? Explain the transient, intermittent and permanent fault classes. Explain in brief, various types of failures. **[9]**

OR

Q4) a) What is check pointing in a distributed system? Explain the working of Coordinated checkpointing recovery mechanism. **[9]**

b) What are two primary reasons for replication? Explain the causal consistency model with suitable example using distributed shared database. **[9]**

Q5) a) Discuss the master-slave architecture of Hadoop Distributed File System along with functions of its key components. **[8]**

b) What Is a Directory Service? What is the difference between DNS and x.500? Describe in detail the components of X.500 service architecture.**[9]**

OR

Q6) a) Explain the Bandwidth, Latency and Loss rate parameters with respect to multimedia stream. Explain the QoS negotiation procedure and admission control scheme for distributed multimedia application. **[8]**

b) What are web services? Describe with a suitable diagram the general organization of the Apache web server. **[9]**

Q7) a) How wearable devices work in distributed systems? Discuss the problems involved with wearable computing. **[9]**

b) Explain with an application (e.g., Travel Booking Service) various key components of Service Oriented Architecture. **[9]**

OR

Q8) a) Compare the following tools for Distributed System Monitoring : **[9]**

Prometheus, Zabbix, Nagios.

b) Explain in brief following Microkernels **[9]**

i) Mach

ii) CHORUS

▽▽▽▽

Total No. of Questions: 8]

SEAT No. :

PB2334

[Total No. of Pages :2

[6263]-182
B.E. (I.T.)
SOFTWARE DEFINED NETWORK
(2019 Pattern) (Semester-VIII) (Elective-V) (414451 A)

Time : 2½ Hours] ***[Max. Marks : 70***

Instructions to the candidates:

1) ***Answer Q.1 or Q.2, Q.3 or Q.4, Q5 or Q6, Q7 or Q8.***
2) ***Neat diagrams must be drawn wherever necessary.***
3) ***Figures to the right indicate full marks.***

Q1) a) Enlist Benefits & Challenges for Network Function virtualization? **[9]**

b) Describe Various Services of Cloud using SDN? **[9]**

OR

Q2) a) Describe NFV architecture and explain Requirements of NFV Frame work? **[9]**

b) Enlist and explain various Virtual Network Applications in Cloud Compouting? **[9]**

Q3) a) Explain SDN use Cases in the Data Center in Detail? **[9]**

b) Write Short note on Failure recovery and Multi Tenancy issues in Data Centers? **[9]**

OR

Q4) a) Differentiate between SDN and network Virtualization? **[9]**

b) Define Data center Network & explain goals of Data center Design? **[9]**

Q5) a) Enlist and Describe Various Security Principles of SDN? **[9]**

b) Discuss different Issues and Challenges in Network Security enhancement using the SDN Framework? **[9]**

OR

P.T.O.

Q6) a) What are the Solutions to the security issues in SDN? **[9]**

b) Enlist Security Characteristics of SDN in detail? **[9]**

Q7) a) Describe Traffic Engineering in Mobile Networks with neat diagram? **[8]**

b) Enlist and Explain Floodlight Controller classes of APIs? **[8]**

OR

Q8) a) Draw & Explain application of open Daylight Controller? **[8]**

b) Describe and explain Design of Reactive Application? **[8]**



Total No. of Questions: 8]

SEAT No. : ____

PB2335

[Total No. of Pages :2

[6263]-183
B.E. (Information Technology)
SOCIAL COMPUTING
(2019 Pattern) (Semester-VIII) (Elective-V) (41445B)

Time : 2½ Hours] ***[Max. Marks : 70***

Instructions to the candidates:

1) ***Answer Q.1 or Q.2, Q.3 or Q.4, Q5 or Q6, Q7 or Q8.***
2) ***Neat diagrams must be drawn wherever necessary.***
3) ***Figures to the right indicate full marks.***
4) ***Assume Suitable data if necessary.***

Q1) a) What is clustering? Explain any clustering algorithm with example **[8]**

b) What is keyword Search? Explain Query Semantics and Answer Ranking. **[9]**

OR

Q2) a) Explain Motivations for Data Mining in Social Media. **[9]**

b) What is data mining? Explain Data Mining Methods for Social Media. **[8]**

Q3) a) What is Influence and how to Measure Influence? **[9]**

b) Explain Randomization Test with example. **[9]**

OR

Q4) a) Explain Shuffle Test and Edge-reversal test. **[9]**

b) What is Homophily? How to measure Homophily. **[9]**

Q5) a) What is Individual Behavior? Explain individual online behaviour three categories. **[8]**

b) What is Collective Behavior Analysis? Explain User Migration in social media. **[9]**

OR

P.T.O.

Q6) a) Which are the major components of Behaviour Analysis Methodology? **[8]**

b) What is Individual Behavior Modelling? Explain Social Community Structure. **[9]**

Q7) a) Write a Note on Exploring Google+API. **[9]**

b) What is TF-IDF? Explain Query human Language Data with TF-IDF. **[9]**

OR

Q8) a) Write a short note on Note on **[9]**

i) Scraping

ii) Parsing

iii) Crawling the web

b) Explain Quality of Analysis for Processing Human Language Data. **[9]**



Total No. of Questions: 8]

SEAT No. : ____

PB2336

[Total No. of Pages :2

[6263]-184

B.E. (Information Technology Engineering)

NATURAL LANGUAGE PROCESSING

(2019Pattern) (Semester-VIII) (Elective-V) (414451 C)

Time : 2½ Hours] ***[Max. Marks : 70***

Instructions to the candidates:

1) ***Answer Q.1 or Q.2, Q.3 or Q.4, Q5 or Q6, Q7 or Q8.***
2) ***Neat diagrams must be drawn wherever necessary.***
3) ***Figures to the right indicate full marks.***
4) ***Assume Suitable data if necessary.***

Q1) a) Explain steps used in discourse processing. **[9]**

b) What are the different types of ambiguity? Provide an example of each. **[9]**

OR

Q2) a) What is the role of lexical resources? Explain WordNet in lexical semantics? **[9]**

b) What is Word Sense Disambiguation? How it is handled in NLP. **[9]**

Q3) a) What is role of annotate knowledge in generation of text reports. **[8]**

b) What is role of NLP in web search? Give suitable example. **[9]**

OR

Q4) a) Explain significance of Text Pre-Processing in NLP. Elaborate any method for Text Pre Processing. **[8]**

b) Write a note on “Learning to Annotate Cases with Knowledge Roles”. **[9]**

Q5) a) What is semantic text mining? Explain with a neat diagram. **[6]**

b) Write note on Combination of Probabilistic Classification and Finite-State Sequence. **[6]**

c) Write in detail the high level representation approaches in text mining. **[6]**

OR

P.T.O.

Q6) a) What is probabilistic model? Give examples of probabilistic models and explain any one in detail. **[9]**

b) Explain the document separation as sequence mapping problem. **[9]**

Q7) a) What is Corpora? What is the role of Corpora? Explain the 3 types of Corpora. **[5]**

b) Explain design feature of IR with a neat diagram. **[7]**

c) Explain POS Tagger. **[5]**

OR

Q8) a) What is iSTART? List the reading strategies used by ISTART **[7]**

b) Write short note on. **[10]**

i) Word Net

ii) Frame Net



Total No. of Questions : 8]

SEAT No. :

PB-2337

[Total No. of Pages : 2

[6263]-185
B.E. (Information Technology)
SOFT COMPUTING
(2019 Pattern) (Semester - VIII) (414451D) (Elective - V)

Time : 2½ Hours] *[Max. Marks : 70*

Instructions to the candidates:

1) ***Answers: Q.1 or Q.2, Q.3 or Q.4, Q.5 or Q.6, Q.7 or Q.8.***
2) ***Neat diagrams must be drawn wherever necessary.***
3) ***Figures to the right side indicate full marks.***
4) ***Assume Suitable data if necessary***

Q1) a) List AND explain the characteristic features of fuzzy logic **[9]**

b) Draw and explain the block diagram of a Fuzzy logic system. **[8]**

OR

Q2) a) List and explain following fuzzy set operations with example **[8]**

i) Normal Fuzzy Set ii) Product of Fuzzy Set

b) Explain the concept of fuzzy propositions with example **[9]**

Q3) a) What is Genetic Algorithm? Explain working principle of GA. **[9]**

b) Compare and contrast traditional algorithm and genetic algorithm **[8]**

OR

Q4) a) Explore the use of mutation operator in GA with eg. **[8]**

b) Explain how genetic algorithms are different than evolutionary programming. **[9]**

P.T.O.

Q5) a) Describe the Neuro Fuzzy systems and its applications. **[9]**

b) What are Fuzzy Genetics Algorithm systems? Explain its applications. **[9]**

OR

Q6) a) What is hybrid soft computing? Explain Fuzzy -Backpropagation system. **[9]**

b) Explain in what ways is a genetic algorithm utilized to obtain weight values for a neural network? **[9]**

Q7) a) Explain use of Soft Computing in Software Engineering using suitable application **[9]**

b) Explain apphcations of fuzzy in pattern recognition system. **[9]**

OR

Q8) Write short notes on (Any 3) **[18]**

a) Particle Swarm Optimization (PSO)

b) Fuzzy ARTMAP

c) GA based clustering

d) Neuro-fuzzy modeling

.



Total No. of Questions : 8] **SEAT No. :**

PB2338 **[Total No. of Pages : 2**

[6263]-186
B.E. (Information Technology)
GAME ENGINEERING
(2019Pattern) (Semester - VIII) (Elective - V) (414451 E)

Time : 2½ Hours] ***[Max. Marks : 70***

Instructions to the candidates:

1) ***Answer Q.1 or Q.2, Q.3 or Q.4, Q.5 or Q.6, Q.7 or Q.8.***
2) ***Neat diagrams must be drawn wherever necessary.***
3) ***Figures to the right indicate full marks.***
4) ***Assume suitable data if necessary.***
5) ***Use of calculator is allowed***

Q1) a) What are some common examples of gamification in digital products and services, and how can it be used effectively? **[6]**

b) What is MBA framework of game designing? **[6]**

c) Explain feedback and reinforcement in game design. **[6]**

OR

Q2) a) Explain how on boarding can be used in game mechanics. **[6]**

b) What is "affective modulation," and how does it relate to the design of digital products and services? **[6]**

c) Explain point system in game engineering. **[6]**

Q3) a) What are the "Three Levels" of rules in game design and how do they relate to gameplay? **[6]**

b) What are the implications of "Competition" in network games and how does it impact network performance? **[5]**

c) What are "Positive and Negative Externalities" in network effects and how do they affect games played over networks? **[6]**

OR

Q4) a) How do the "Rules of Digital Games" differ from those of traditional board or card games? **[6]**

b) What is the "Price of Anarchy" and how does it relate to network games and their outcomes? **[5]**

c) What is "Selfish Routing" and how does it relate to network games? **[6]**

P.T.O.

Q5) a) What are some key features of Construct 2, and how have they contributed to its popularity among game developers? **[6]**

b) What are some of the advantages and disadvantages of using Flowlab for game development, and how does it compare to other game engines? **[6]**

c) List and explain the features of any gamification server. **[6]**

OR

Q6) a) What are some key features of GameMaker: Studio, and how do they help developers create engaging games? **[6]**

b) Discuss BigDoor platform? Explain any one usage of it? **[6]**

c) What are some popular game engines/frameworks. and what are their strengths and weaknesses? **[6]**

Q7) a) What are some ways in which game engineering can be used to create effective advertising campaigns? Explain with example. **[9]**

b) Explain implementation of The Psychology Of Gamification: Why It Works (& How To Do It!) for Nike's running app. **[8]**

OR

Q8) a) How is game engineering being used in the healthcare industry, and what are some examples of successful healthcare games? **[9]**

b) What are some potential challenges faced by game developers when designing and engineering mobile games like PUBG New State? **[8]**

Total No. of Questions : 8]

SEAT No. :

PB2339

[Total No. of Pages :2

[6263]-187
B.E. (I.T.)
ETHICAL HACKING & SECURITY
(2019 Pattern) (Semester-VIII) (Elective - VI) (414452 (A))

Time : 2½ Hours] *[Max. Marks : 70*

Instructions to the candidates:

1) ***Answer Q.1 or Q.2, Q.3 or Q.4, Q.5 or Q.6 and Q.7 or Q.8.***
2) ***Neat diagrams must be drawn wherever necessary.***
3) ***Figures to the right indicate full marks.***
4) ***Assume suitable data, if necessary.***

Q1) a) Explain the term social engineering toolkit uses in details with suitable example. **[9]**

b) What is Metasploit? Can you explain what an exploit is and how it works in the context of Metasploit? **[9]**

OR

Q2) a) What are the 5 types of password cracking methods? **[9]**

b) List out the main components of Metasploit and explain in details. **[9]**

Q3) a) What is the most common Windows privilege escalation? **[9]**

b) Explain different technique has the ability to exploit OS vulnerabilities to escalate privileges. **[8]**

OR

Q4) a) What is the different between horizontal and vetical privilege escalation? **[9]**

b) Explain the term most common Linux privilege escalation. **[8]**

Q5) a) What is the main risk of a cross - site scripting attack? **[9]**

b) What are the most common security issues on web applications? **[9]**

OR

P.T.O.

Q6) a) What are the most common results of a Cross-Site Request Forgery? **[9]**

b) What are the risk factors involved in XML external entity XXE vulnerability? **[9]**

Q7) a) Write a short note on challenges of wireless security. **[9]**

b) What type of attack is the evil twin attack? **[8]**

OR

Q8) a) Explain in detail problem with the evil twin attack. **[9]**

b) What are the main threats to Wi-Fi security? **[8]**

Total No. of Questions : 8]

SEAT No. :

PB2340

[Total No. of Pages : 1

[6263]-188

B.E. (Information Technology)

AUGMENTED AND VIRTUAL REALITY

(2019Pattern) (Semester - VIII) (Elective - VI) (414452 B)

Time : 2½ Hours] *[Max. Marks : 70*

Instructions to the candidates:

1) ***Answer Q.1 or Q.2, Q.3 or Q.4, Q.5 or Q.6, Q.7 or Q.8.***
2) ***Neat diagrams must be drawn wherever necessary.***
3) ***Figures to the right indicate full marks.***
4) ***Assume suitable data if necessary.***

Q1) a) Describe in detail how colors are perceived. **[9]**

b) Describe a detailed description of various motion detecting mechanism. **[9]**

OR

Q2) a) Describe in detail the Ray Tracing and Shading Models. **[9]**

b) Demonstrate the three categories of tracking that VR systems are using. **[9]**

Q3) a) How do you use Augmented Reality? Describe with an appropriate example. **[9]**

b) Describe the various applications for augmented reality. **[8]**

OR

Q4) a) What Does Augmented Reality Mean? Describe the augmented reality's history. **[8]**

b) Describe different hardware components used in augmented reality. **[9]**

Q5) a) What is hybrid tracking? Explain with suitable examples. **[9]**

b) How does a sensor work towards tracking? Describe in detail. **[9]**

OR

Q6) a) Identify and illustrate the characteristics of tracking technology. **[9]**

b) Describe Spatial Display Model in detail. **[9]**

Q7) a) What is natural-feature tracking? Explain using any one application. **[9]**

b) What does simultaneous AR mapping and localization indicate? Explain in detail. **[8]**

OR

Q8) a) What software is used for augmented reality? Explain in detail. **[9]**

b) What is marker tracking in AR? Explain in detail. **[8]**

◀▶ ◀▶ ◀▶

Total No. of Questions : 8]

SEAT No. :

PB2341

[Total No. of Pages : 3

[6263]-189

B.E. (Information Technology)

BUSINESS ANALYTICS AND INTELLIGENCE

(2019 Pattern) (Semester - VIII) (414452C) (Elective - VI)

Time : 2½ Hours] *[Max. Marks : 70*

Instructions to the candidates:

1) ***Answer Q.1 or Q.2, Q.3 or Q.4, Q.5 or Q.6, Q.7 or Q.8.***
2) ***Neat diagrams must be drawn wherever necessary.***
3) ***Figures to the right indicate full marks.***
4) ***Assume suitable data, if necessary.***

Q1) a) List and explain the four processes that define a closed-loop BPM cycle. **[8]**

b) How is a balanced scorecard used in Business? **[5]**

c) What is data visualization? Explain the need for data visualization in Business intelligence. **[5]**

OR

Q2) a) List and briefly explain different types of charts used for visualization. **[8]**

b) List and briefly explain different types of Business Report. **[5]**

c) What is the role of the Performance dashboards? **[5]**

Q3) a) Write a short note on: **[9]**

i) Descriptive analytics

ii) Predictive analytics

iii) Prescriptive analytics

b) Consider a scenario that a bread seller charges Rs. 30 per loaf of bread, and he sells 50 loafs a day. What would happen to his revenue if he charged more for each loaf of bread? **[8]**

Evaluate the above mentioned scenario using what if analysis with respect to:

Case 1: The volume of bread sold doesn't depend on the price of the bread

Case 2: The amount of bread he sell does depend on the price he charge (Sale increases if price reduced, sale decreases if price increased)

Assume suitable data wherever required.

OR

P.T.O.

Q4) a) Discuss structure of mathematical model for decision support. **[8]**

b) Imagine you're managing the finances of a small business, and you want to plan your budget for the upcoming year. You have a basic income and expense sheet. You'd like to know how different changes will affect your end-of-year balance. **[9]**

Given the following information:

- Initial balance: $10,000
- Monthly income: $5,000
- Monthly expenses: $3,000

You want to perform What-If Analysis for different scenarios:

i) What would your end-of-year balance be if you increase your monthly income by 10%?

ii) What if you cut your monthly expenses by 20%?

iii) What if you do both, increase income by 10% and decrease expenses by 20%?

Q5) a) Discuss the role of predictive analytics in demand forecasting for production planning in a manufacturing unit. **[6]**

b) In logistics and production, what are the key performance indicators (KPIs) that organizations commonly track using BI? Explain the significance of these KPIs. **[6]**

c) Enlist the advantages of using Business Intelligence in Customer Relationship Management. **[6]**

OR

Q6) a) Compare Business Analytics (BA) with Business Intelligence (BI). **[6]**

b) Explain application of Business Intelligence in Fraud Detection with a suitable example. **[6]**

c) List various forms of Business Analytics and explain any one form in view of its support in practice. **[6]**

Q7) a) Write a short note on: Cloud Computing and Business Intelligence. **[6]**

b) Enlist the factors that can be considered for implementing a Business Intelligence strategy? **[5]**

c) In today's data-driven world, data analysis plays a crucial role in predicting future trends and outcomes. Discuss the key steps and considerations involved in using data analysis to make predictions about the future. Provide an example of a real-world application where predictive analysis has been successfully employed to make informed decisions. **[6]**

OR

Q8) a) Write a short note on: Issues of Legality, Privacy and Ethics. **[6]**

b) You are the IT manager of a medium-sized company, and you are considering moving your business intelligence (BI) system to the cloud. Your BI system is critical for making data-driven decisions. You need to make a decision on which cloud service model (IaaS, PaaS, SaaS) to choose for hosting your BI system.

Explain the key factors you should consider when making this decision and the potential advantages and disadvantages of each service model in the context of BI. **[6]**

c) Write a short note on Analytics Applications for Consumers. **[5]**



Total No. of Questions : 8]

SEAT No. : [ ]

PB2342

[Total No. of Pages : 2

[6263]-190

B.E. (Information Technology)

BLOCKCHAIN TECHNOLOGY

(2019 Pattern) (Semester - VIII) (414452D) (Elective - VI)

Time : 2½ Hours] ***[Max. Marks : 70***

Instructions to the candidates:

1) ***Answer Q1 or Q2, Q3 or Q4, Q5 or Q6, Q7 or Q8.***
2) ***Neat diagrams must be drawn wherever necessary.***
3) ***Figures to the right indicate full marks.***
4) ***Assume suitable data, if necessary.***

Q1) a) What is bytecode in Ethereum, give its importance. List the different languages supported by Ethereum. **[9]**

b) What is Ethereum? Compare ethereum with Bitcoin. **[9]**

OR

Q2) a) Describe the working of smart contracts. **[9]**

b) State and explain the various components of Ethereum. **[9]**

Q3) a) Explain comparison between hyperledger with Ethereum. **[9]**

b) Explain the features of hyperledger. **[8]**

OR

Q4) a) Explain Hyperledger fabric architecture with its components. **[9]**

b) State and explain the benefits of Hyperledger fabric. **[8]**

P.T.O.

Q5) a) Explain Consensus mechanism in detail. **[9]**

b) Explain the role of blockchain in enterprise system. **[9]**

OR

Q6) a) What is the function of tokenization in detail. **[9]**

b) Explain limitation of tokens with suitable example. **[9]**

Q7) a) Explain Security Risks of Blockchain in detail. **[9]**

b) Explain role of blockchain in Health Insurance. **[8]**

OR

Q8) a) Explain role of blockchain in Supply Chain Financing. **[9]**

b) Explain Legal Regulations for Blockchain. **[8]**



Total No. of Questions : 8]

SEAT No. :

PB2343

[Total No. of Pages : 2

[6263]-191
B.E.(Instrumentation &Control)
PROCESS CONTROL TECHNIQUES
(2019 Pattern)(Semester - VII)(406261)

Time : 2½Hours] *[Max. Marks :70*

Instructions to the candidates:

1) ***Answer Q1or Q2, Q3 or Q4, Q5 or Q6, Q7 or Q8.***
2) ***Neat diagrams must be drawn wherever necessary.***
3) ***Figures to the right indicate full marks.***
4) ***Assume Suitable data if necessary.***
5) ***Use of calculator is allowed.***

Q1) a) Derive closed loop transfer function of feedback control loop and state its closed loop stability condition. **[8]**

b) Explain detail procedure for determination of closed loop stability conditions of Proportional controller for first order plant model set point change. **[9]**

OR

Q2) a) Explain tuning and fine tuning of controller in detail. **[8]**

b) Discuss procedure for tuning of PID Controller using Zeigler-Nichols closed loop method for any suitable plant transfer function. **[9]**

Q3) a) Discuss selective control with suitable example. **[9]**

b) Explain cascade control in detail. **[9]**

OR

Q4) a) With neat sketch explain feedback-feedforward control and its application. **[9]**

b) Illustrate ratio control with suitable example. **[9]**

P.T.O.

Q5) a) Explain relative gain array (RGA) and its important properties. Also discuss procedure for determination of RGA. **[10]**

b) Explain 2×2 multivariable control system in detail with block diagram. **[7]**

OR

Q6) a) Discuss procedure for calculation of λ. Calculate λ for below process model and comment on loop interaction and pairing. **[10]**

$$G_p(s) = \begin{bmatrix} \frac{-2e^{-s}}{10s+1} & \frac{1.5e^{-s}}{s+1} \\ \frac{1.5e^{-s}}{s+1} & \frac{2e^{-s}}{10s+1} \end{bmatrix}$$

b) Discuss direct and indirect effect of interaction with help of 2×2 systems. **[7]**

Q7) a) By using direct synthesis method determine PID structure and its settings for FOPDT model. **[10]**

b) Design PID controller for the FOPDT model using IMC method. **[8]**

OR

Q8) a) With neat block diagram discuss model predictive controller and IMC based PID controllers. **[10]**

b) Explain Smith Predictor technique for compensation of delay time. **[8]**

Total No. of Questions : 8]

SEAT No. :

PB2244

[Total No. of Pages : 2

[6263]-192

B.E. (Instrumentation & Control)

PROJECT ENGINEERING AND MANAGEMENT

(2019 Pattern) (Semester - VII) (406262)

Time : 2½ Hours] *[Max. Marks : 70*

Instructions to the candidates:

1) ***Answer Q1 or Q2, Q3 or Q4, Q5 or Q6, Q7 or Q8.***
2) ***Neat diagrams must be drawn wherever necessary.***
3) ***Figures to the right side indicate full marks.***
4) ***Assume suitable data, if necessary.***

Q1) a) Elaborate Project Resource Management & Plan Resource Management. **[9]**

b) Discuss the role of team manager to develop Team, manage Team, control Resources. **[9]**

OR

Q2) a) Analyze project Procurement Management & Project Procurement Plan. **[9]**

b) Develop a Risk Management Plan for any instrumentation project. **[9]**

Q3) a) Draw & elaborate various types of ISA standards (Valves, lines, equipments). **[9]**

b) Draw & explain Plant and piping layouts. **[9]**

OR

Q4) a) Discuss P & ID with any instrumentation project examples. **[9]**

b) Draw & elaborate Junction box layout, system Architecture and network layout diagrams. **[9]**

P.T.O.

Q5) a) Differentiate between BOM and MBOM. **[8]**

b) Sketch Control room layout. **[9]**

OR

Q6) a) Elaborate Cable identification schemes & explain Cable trays. **[8]**

b) Draw & classify conductors with Specification & Selection criteria. **[9]**

Q7) a) Elaborate Panel testing Procedure and its documentation. **[8]**

b) Explain Factory Acceptance Test (FAT). **[9]**

OR

Q8) a) Differentiate between Cold Commissioning and hot commissioning. **[8]**

b) Explain Site inspection and testing (SAT). **[9]**

x x x

Total No. of Questions : 8]

SEAT No. : ____

PB2345

[Total No. of Pages : 2

[6263]-193

B.E. (Instrumentation & Control)

DIGITAL IMAGE PROCESSING

(2019 Pattern) (Semester - VII) (406263 A) (Elective - III)

Time : 2½ Hours] ***[Max. Marks : 70***

Instructions to the candidates:

1) ***Solve Q.1 or Q.2, Q.3 or Q.4, Q.5 or Q6, Q.7 or Q.8.***
2) ***Neat diagrams must be drawn wherever necessary.***
3) ***Use of Non-programmable Calculator is allowed.***
4) ***Assume Suitable data if necessary.***

Q1) a) Write a short note on linear stretching. **[8]**

b) Explain the role of high pass filtering in image sharpening. **[9]**

OR

Q2) a) Explain the image averaging technique. **[8]**

b) Explain low contrast stretching. **[9]**

Q3) a) Explain image pattern and pattern classes, **[9]**

b) Explain the need of classifiers in image processing. Draw the flow using any application. **[9]**

OR

Q4) a) How the image is represented. Explain the methods in detail. **[9]**

b) Explain the role of image descriptors in image processing. **[9]**

P.T.O.

Q5) a) Write a short note on Vector Quantization. **[8]**

b) Explain the arithmetic coding for image processing. **[9]**

OR

Q6) a) Explain the RLE compression technique. **[9]**

b) Explain the properties in image compression schemes. **[8]**

Q7) a) Explain the role of image processing in biometrics. **[9]**

b) How image processing is used in military application. **[9]**

OR

Q8) a) Explain the application in image processing in agriculture field **[9]**

b) Write a short note on application of image processing in bio-medical engineering. **[9]**

❋ ❋ ❋

Total No. of Questions : 8]

SEAT No. :

PB2346

[Total No. of Pages : 2

[6263]-194
B.E. (Instrumentation & Control)
DATA ANALYTICS
(2019 Pattern) (Semester - VII) (406263 B) (Elective - III)

Time : 2½ Hours] *[Max. Marks : 70*

Instructions to the candidates:

1) ***All questions are compulsory.***
2) ***Neat diagrams must be drawn wherever necessary.***
3) ***Figures to the right side indicate full marks.***
4) ***Use of Logarithmic tables, electronic Pocket calculator and steam table is allowed.***
5) ***Assume Suitable data if necessary.***

Q1) a) Explain the associate rule with example. **[7]**

b) Discuss the linear regression model and logistic regression model. **[10]**

OR

Q2) a) Explain the following (Any two)

i) Candidature rule

ii) Apriori Algorithm

iii) Validation, testing and diagnostics **[10]**

b) Explain the terms support, leverage, confidence, lift. **[7]**

Q3) a) Elaborate the decision tree algorithm with suitable example **[9]**

b) Discuss the naïve bayes probability model for classification with suitable example. **[9]**

OR

Q4) a) Discuss the following terms (Any two). **[10]**

i) Evaluating of candidate rule

ii) Diagnostic of classifier

iii) Shooting

b) Enlist the models used in time series analysis and it's applications. **[8]**

P.T.O.

Q5) a) Enlist the conventional data visualization tools. **[8]**

b) Sketch and explain data visualization graphs **[9]**

OR

Q6) a) Elaborate the challenges and need of data visualization in industry applications. **[8]**

b) What are the different Analytical techniques used in Big data visualization. **[9]**

Q7) a) Explain with advantages and disadvantages of Map Reduce. **[9]**

b) Explain the Hadoop ecosystem and Apache hadoop. **[9]**

OR

Q8) a) Differentiate between structured and unstructured data. **[6]**

b) Write short note on SQL and No SQL **[6]**

c) Explain the need of Tableau and Power bi tools in industrial applications **[6]**

❋ ❋ ❋

Total No. of Questions : 8]

SEAT No. :

PB2347

[Total No. of Pages : 2

[6263]-195

B.E. (Instrumentation & Control)

WIRELESS SENSOR NETWORKS

(2019 Pattern) (Semester - VII) (Elective - III) (406263 C)

Time : 2½ Hours] *[Max. Marks : 70*

Instructions to the candidates:

1) ***Solve Q.1 or Q.2, Q.3 or Q.4, Q.5 or Q6, Q.7 or Q.8.***
2) ***Figures to the right side indicate full marks.***
3) ***Neat diagrams must be drawn wherever necessary.***
4) ***Use of calculator is allowed.***
5) ***Assume suitable data if necessary.***

Q1) a) In context to MAC protocol, discuss any five (5) points in one-to-two lines: Network Overload (Low/High), Bandwidth Allocation, Power Control Mechanisms, Quality of Service Support (QoS) Support (Say For Military Operation), Hidden and Exposed Problems (Packet Collision), Node Synchronization. **[10]**

b) Write on Low Energy Adaptive Clustering Hierarchy (LEACH) protocol with respect to: data transmission-from whom to whom, what cluster head does, how are cluster heads chosen in rounds, random number of sensor node and relation to threshold value T(n). **[8]**

OR

Q2) a) Define MAC protocol. Explain with neat sketch Random Access-Based Protocol. **[10]**

b) List the various routing strategies in Wireless Sensor Networks. Explain in detail Flooding and its variants. **[8]**

Q3) a) Explain with neat sketch Event-to-Sink Reliable Transport (ESRT) protocol-any one of these two options. **[10]**

b) Compare Traditional Transport Control Protocols for wireless sensor network TCP Vs UDP. **[8]**

OR

P.T.O.

Q4) a) Write on TCP protocol with points **[10]**

i) Connection establishment through SYN, ACK and window size,

ii) Data transfer,

iii) Connection termination

iv) Does it offer duplex communication? Students may draw diagram of TCP/IP model or they may mention about model without diagram.

b) Draw a neat sketch and explain Congestion Detection and Avoidance (CODA). **[8]**

Q5) a) Draw and explain Middleware Architecture for wireless sensor network.**[7]**

b) Define the role of middleware in wireless sensor network. Elaborate in detail existing Middleware-MiLAN (Middleware Linking Applications and Networks). **[10]**

OR

Q6) a) Draw architecture of Middleware in WSN. Randomly given points are: Sensors, RFID, ERP, Company Portal, Hardware abstraction, Hardware Coordinator, Filtration, Complex event processing, data persistence.**[10]**

b) Discuss IrisNet with diagram in context to parking problem solving in your city. **[7]**

Q7) a) List the Network Security requirements issues and Challenges in security provisioning Network. **[10]**

b) Elaborate in detail sensor network Platforms and Tool for network security. **[7]**

OR

Q8) a) In context to Network Security and Denial of Services (DoS): what can happen in Ad-hoc WSN, Write various possibilities in details with an example (any 5 five points). **[10]**

b) Elaborate Black hole and flooding attacks in network security. **[7]**

❋ ❋ ❋

Total No. of Questions : 8]

SEAT No. :

PB2348

[Total No. of Pages : 2

[6263]-196

B.E. (Instrumentation & Control)

PROCESS MODELLING AND OPTIMISATION

(2019 Pattern) (Semester - VII) (Elective - III) (406263 D)

Time : 2½ Hours] *[Max. Marks : 70*

Instructions to the candidates:

1) ***All questions are compulsory.***
2) ***Neat diagrams must be drawn wherever necessary.***
3) ***Figures to the right indicate full marks.***
4) ***Use of logarithmic tables, electronic pocket calculator etc is allowed.***
5) ***Assume suitable data if necessary.***

Q1) a) Explain offline and online identification of process. **[9]**

b) Explain predication error methods for identification. **[8]**

OR

Q2) a) Explain eyeball fitting method for identification. **[9]**

b) Explain relationship between time, Laplace and frequency domain. **[8]**

Q3) a) Determine the stability of a 2 × 2 process with a diagonal feedback controller given as: **[9]**

$$G_m = \begin{bmatrix} 5 & 3 \\ 2 & 4 \end{bmatrix} \text{ and } B_s = \begin{bmatrix} 4 & 1 \\ -1 & 5 \end{bmatrix}$$

b) Explain relative gain array. **[9]**

OR

Q4) a) Explain Inverse Nyquist Array and it's application in analysis of multivariable system. **[9]**

b) For the system given Find NI for this comment on stability also find proper pairing of control and manipulated variables. **[9]**

$$\begin{bmatrix} x \\ y \end{bmatrix} = \begin{bmatrix} 10\dfrac{e^{-2s}}{(2s+1)} & 15\dfrac{e^{-s}}{(5s+1)} \\ 6\dfrac{e^{-5s}}{5s+1} & \dfrac{e^{-2s}}{(2s+1} \end{bmatrix} \begin{bmatrix} P \\ Q \end{bmatrix}$$

P.T.O.

Q5) a) Explain extremum of objective function. **[9]**

b) Explain optimization component of optimization statement with suitable example. **[8]**

OR

Q6) a) Explain Convex and Concave functions with proper example and it's roll in optimization. **[8]**

b) For the functions given below, analyze the concavity and convexity in each case. **[9]**

i) $f(x_1, x_2) = (x_1 - x_2)^2 + x_2$

ii) $f(x) = x_1^2 + 4x_1x_2 + x_1 + x_2 + 3$

iii) $f(x) = 5x + 3x^2 + 4x^3$

Q7) a) Determine the optimum values of x_1 & x_2 for the function

$y = \frac{x_1^2}{3} + \frac{6}{x_1x_2} + 2x_2$ and state whether point is minimum or maximum. **[9]**

b) Explain Quasi Newton method for optimization. **[9]**

OR

Q8) a) Explain region elimination method. **[9]**

b) Explain simplex method of optimization. **[9]**

❋ ❋ ❋

Total No. of Questions : 8]

SEAT No. : ____

PB2349

[Total No. of Pages : 2

[6263]-197

B.E. (Instrumentation & Control)

CLOUD COMPUTING

(2019 Pattern) (Semester-VII) (Elective-IV) (406264 A)

Time : 2½ Hours] ***[Max. Marks : 70***

Instructions to the candidates:

1) ***Answers Q1 or Q2, Q3 or Q4, Q5 or Q6, Q7 or Q8.***
2) ***Neat diagrams must be drawn wherever necessary.***
3) ***Figures to the right indicate full marks.***
4) ***Assume suitable data if necessary.***

Q1) a) Analyze the architecture of Virtual Machine with its brief operations. **[9]**

b) How hypervisor are works in cloud computing. **[9]**

OR

Q2) a) Justify "Virtualization is the wave of the future". Explicate the process of CPU, memory and I/O device virtualization in data center. **[9]**

b) How virtualization can be implemented in the multi-core processors. **[9]**

Q3) a) Summarize the commonly used services provided by AWS? **[9]**

b) Analyze the amazon elastic block store. List its various benefits? **[8]**

OR

Q4) a) Summarize the steps to create EBS volume snapshot? **[9]**

b) Comment on the performance expections by customer on Elastic Block Storage. **[8]**

Q5) a) Comment on: **[9]**

i) WSN: a driving force of IoT and cloud computing

ii) IAM: Identity and Access Management in cloud computing

iii) Significance of GPS in IoT

b) Smart building is one of the major application of IoT and cloud computing Elaborate with suitable diagram and examples. **[9]**

OR

P.T.O.

Q6) a) Comment on Ubiquitous system challenges and outlook. **[9]**

b) Elaborate the cyber physical system (CPS) and their components. **[9]**

Q7) a) Elaborate the docker deployment workflow with diagram. **[9]**

b) Comment on **[8]**

i) Mobile Cloud Computing.

ii) Jungle Computing.

OR

Q8) a) Sketch the architecture of mobile cloud computing. **[9]**

b) Comment on

i) Mobile Cloud Computing

ii) Jungle Computing. **[8]**

● ● ●

Total No. of Questions : 8]

SEAT No. :

PB4536

[Total No. of Pages : 2

[6263]-198
B.E.(Instrumentation & Control)
SOFT COMPUTING
(2019 Pattern) (Semester-VII) (Elective -IV) (406264 B)

Time : 2½ Hours] *[Max. Marks : 70*

Instructions to the candidates:

1) ***Answer Q.1 or Q.2, Q.3 or Q.4, Q.5 or Q.6, Q.7 or Q.8.***
2) ***Neat diagrams must be drawn wherever necessary.***
3) ***Figures to the right indicate full marks.***
4) ***Assume Suitable data, if necessary.***

Q1) a) Enlist all defuzzification methods. Explain any two defuzzification methods? **[9]**

b) Explain the Basic concepts of fuzzy logic with some example. **[8]**

OR

Q2) a) What are Fuzzy propositions? List the operations on Fuzzy propositions? **[9]**

b) What is Fuzzy Inference System (FIS)? Illustrate Mamdani FIS and Sugeno FIS with examples? **[8]**

Q3) a) Write a short note on crisp set. Give some example on it. **[8]**

b) Consider a local area network (LAN) of interconnected workstations that communicate using Ethernet protocols at a maximum rate of 20 Mbit/s. The two fuzzy sets given below represent the loading of the LAN:

$$\underset{\sim}{\mu_s}(x) = \left\{\frac{1.0}{0} + \frac{1.0}{1} + \frac{0.9}{2} + \frac{0.4}{5} + \frac{0.1}{7} + \frac{0.3}{9} + \frac{0.0}{10}\right\}$$

$$\underset{\sim}{\mu_s}(x) = \left\{\frac{0.0}{0} + \frac{0.1}{1} + \frac{0.3}{2} + \frac{0.5}{5} + \frac{0.3}{7} + \frac{0.8}{9} + \frac{1.0}{10}\right\}$$ **[9]**

Where S~ represents silent and C~represents congestion. Perform algebraic product, bounded sum and bounded difference over the two fuzzy sets.

OR

P.T.O.

Q4) a) What is Cooperative Neural Fuzzy system? Illustrate its classification types? **[8]**

b) Explain the Fuzzy implications, and Fuzzy algorithms. **[9]**

Q5) a) Explain in detail the fuzzy controller with example. **[9]**

b) Give the Analysis of static properties of fuzzy controller with example. **[9]**

OR

Q6) a) Explain the fuzzy controllers for smart cars in detail. **[9]**

b) Give the Analysis of dynamic porperties of fuzzy controller with example. **[9]**

Q7) a) Explain the neuro-fuzzy controllers for temperature application. **[9]**

b) Write a short note on RBF network based self-learning controllers. **[9]**

OR

Q8) a) Explain the Fuzzified CMAC based self learning controllers. **[9]**

b) Explain the method of construction of rule bases by self-learning in detail. **[9]**



Total No. of Questions : 8]

SEAT No. :

PB2350

[Total No. of Pages : 2

[6263]-199

B.E. (Instrumentation & Control Engineering)

AUTOMOTIVE INSTRUMENTATION

(2019 Pattern) (Semester-VII) (Elective-IV)(406264C)

Time : 2½ Hours] *[Max. Marks : 70*

Instructions to the candidates:

1) ***Answer Q.1 or Q.2, Q.3 or Q.4, Q.5 or Q.6, Q.7 or Q.8.***
2) ***Neat diagrams must be drawn wherever necessary.***
3) ***Figures to the right side indicate full marks.***
4) ***Use of Calculator is allowed.***
5) ***Assume Suitable data if necessary.***

Q1) a) Define active safety system in vehicles. Explain lane departure electronics active safety system in vehicle. **[9]**

b) Explain passive safety systems in vehicle. **[9]**

OR

Q2) a) Explain the instrumentation in dynamic radar cruise control system in vehicle. **[9]**

b) Describe the working of automatic high beams electronics in vehicles with diagram. **[9]**

Q3) a) Explain in detail the application of CAN network in vehicle. **[9]**

b) Describe the application of Media Oriented Systems Transport (MOST) Protocol. **[8]**

OR

Q4) a) List different protocol used in automotive. Explain EV charging industry standards and protocols. **[9]**

b) Explain FlexRay communication protocol network in vehicle. **[8]**

P.T.O.

Q5) a) Explain driving cycle and range with reference to electric vehicle. **[8]**

b) What is electromobility. Explain electrical motor topologies. **[10]**

OR

Q6) a) Explain in detail the components of power trains in electric vehicle. **[9]**

b) Explain in detail the role of inverter in electric vehicle with neat diagram. **[9]**

Q7) a) State the advantages of IOT in automotive. Explain vehicle to vehicle (V2V) communication technology in detail. **[9]**

b) With the help of neat block diagram, Explain the working of Vehicle to pedestrians (V2P) system. **[8]**

OR

Q8) a) State the advantages of IOT in automotive. Explain vehicle to infrastructure (V21) communication network in vehicles. **[9]**

b) Explain Vehicle to network (V2N) communication network in vehicles. **[8]**

● ● ●

Total No. of Questions : 8]

SEAT No. : ____

PB2351

[Total No. of Pages : 3

[6263]-200

B.E. (Instrumentation & Control)

ADVANCED CONTROL SYSTEM

(2019 Pattern) (Semester-VII) (Elective-IV) (406264D)

Time : 2½ Hours] ***[Max. Marks : 70***

Instructions to the candidates:

1) ***All questions are compulsory.***
2) ***Neat diagrams must be drawn wherever necessary.***
3) ***Figures to the right side indicate full marks.***
4) ***Use of logarithmic tables, electronic pocket calculator and steam table is allowed.***
5) ***Assume suitable data if necessary.***

Q1) a) Find the diagonal canonical form of following system. **[9]**

$$X(k+1)=\begin{bmatrix}0 & 1 & 0\\ 0 & 0 & 1\\ -1 & -4 & -6\end{bmatrix}X(k)+\begin{bmatrix}0\\ 0\\ 1\end{bmatrix}u(k)$$

$Y(k)=[2\ 5\ 1\ ]X(k)$

b) Convert the pulse transfer function to controllable canonical form and Jordan Canonical form $\frac{Y(z)}{X(z)}=\frac{(z+2)(z+1)}{(z+3)^2(z+1.5)}$ **[8]**

OR

Q2) a) Derive solution of state equation in digital control system. **[9]**

b) State and derive properties of state transition matrix. **[8]**

Q3) a) Investigate controllability and observability of following system. **[6]**

$$G=\begin{bmatrix}0 & 0 & -2\\ 0 & 1 & 0\\ 1 & 0 & 3\end{bmatrix}, H=\begin{bmatrix}0\\ 1\\ 0\end{bmatrix} \text{and} C=\begin{bmatrix}1\ 0\ 1\end{bmatrix}$$

P.T.O.

b) Find the feedback gain matrix for following system. **[12]**

$$X(k=1)=\begin{bmatrix}0 & 1 & 0\\ 0 & 0 & 1\\ -6 & -11 & -6\end{bmatrix}X(k)+\begin{bmatrix}0\\0\\1\end{bmatrix}u(k)$$

If poles are required to be placed at –1, –3, –4

OR

Q4) a) Investigate controllability and observability of following system. **[6]**

$$x(k+1)=\begin{bmatrix}0 & 1 & 0\\ 0 & 0 & 1\\ -5 & -3 & -4\end{bmatrix}x(k)+\begin{bmatrix}0\\0\\2\end{bmatrix}u(k)$$

$y(k)=[2\ 0\ 1]x(k)$

b) Design a full order observer for following system. **[12]**

$$x(k+1)=\begin{bmatrix}0 & 1 & 0\\ 0 & 0 & 1\\ -60 & -52 & -13\end{bmatrix}x(k)+\begin{bmatrix}0\\0\\1\end{bmatrix}u(k)$$

$y(k)=[1\ 2\ 1]\ x(k)$

So that poles of close loop system will placed at –1, –2, –4

Q5) a) Determine whether following system is positive definite, positive semidefinite, negative definite, negative semi definite system. **[8]**

$$P=\begin{bmatrix}2 & 4 & 1\\ 6 & 1 & 4\\ 1 & 4 & 7\end{bmatrix}$$

$$P=\begin{bmatrix}1 & 3 & 2\\ 3 & 2 & 4\\ 5 & 6 & 8\end{bmatrix}$$

b) Find stability of equilibrium point using Lyapunov stability **[9]**

$$x(k+1)=\begin{bmatrix}0 & 1 & 0\\ 0 & 0 & 1\\ -24 & -26 & -9\end{bmatrix}x(k)$$

OR

Q6) a) Determine whether following system is stable in sense of Lyapunov or not **[8]**

$$x_1(k+1) = 2x_1(k)$$
$$x_2(k+1) = -3x_1(k) - 2x_2(k)$$

If energy function is given by $v(x_1, x_2) = 0.5x_1^2 + 2x_2^2$

b) Determine whether following system is stable or not **[9]**

$$x_1(k+1) = 3x_1(k)$$
$$x_2(k+1) = x_1(k) + 2x_2(k) + 2u(k)$$

Q7) a) Explain saturation , dead time and backlash. **[9]**

b) Find the describing function of ideally relay. **[9]**

OR

Q8) a) Explain singular point, Nodal point, Saddle point in phase plane. **[9]**

b) Find the describing function of saturation. **[9]**

● ● ●

Total No. of Questions : 8]

SEAT No. :

PB-2352

[Total No. of Pages : 2

[6263]-201

B.E. (Instrumentation & Control)

PROCESS INSTRUMENTATION

(2019 Pattern) (Semester - VIII) (406268)

Time : 2½ Hours] *[Max. Marks : 70*

Instructions to the candidates :

1) ***Answer Q.1 or Q.2, Q.3 or Q.4, Q.5 or Q.6, Q.7 or Q.8.***
2) ***Neat diagrams must be drawn wherever necessary.***
3) ***Figures to the right side indicate full marks.***
4) ***Assume suitable data, if necessary.***
5) ***Use of calculator is allowed.***

Q1) a) Develop suitable cascade control strategy for level control of a column. **[7]**

b) State importance of reflux ratio in distillation. Develop feedback control for composition of bottoms product. **[10]**

OR

Q2) a) Develop feedback control strategy for pressure control of a column. **[7]**

b) Develop inferential control for top product composition control in distillation. **[10]**

Q3) a) Identify process variables, control variables and manipulated variables in Dryers and Evaporators. **[7]**

b) Develop feedback control for multi-effect evaporator control with suitable diagram. **[10]**

OR

Q4) a) Develop feedback control for spray dryer control with neat suitable diagram. **[7]**

b) Develop cascade control strategy for multi-effect evaporator control. **[10]**

P.T.O.

Q5) a) Develop cascade control strategy for control of product quality. **[8]**

b) Develop ratio control strategy for exothermic reactor. **[10]**

OR

Q6) a) Develop temperature on flow cascade control strategy for endothermic reactors with neat diagram. **[8]**

b) With suitable example, elaborate sequential & logic control in batch process. **[10]**

Q7) a) Enlist different types of compressors. Comment on surge phenomenon. **[8]**

b) Comment on surge effect and develop anti-surge control system in compressors. **[10]**

OR

Q8) a) Develop control system used for positive displacement pumps. **[8]**

b) Develop control strategy for multi pump station with suitable diagram. **[10]**

▽▽▽▽

Total No. of Questions : 8]

SEAT No. :

PB4419

[Total No. of Pages : 2

[6263]-202R
B.E. (Instrumentation and Control)
ADVANCED EMBEDDED SYSTEMS
(2019 Pattern) (Semester - VIII) (406269)

Time : 2½ Hours] *[Max. Marks : 70*

Instructions to the candidates:

1) ***Answer Q.1 or Q.2, Q.3 or Q.4, Q.5 or Q.6, Q.7 or Q.8.***
2) ***Neat diagrams must be drawn wherever necessary.***
3) ***Figures to the right side indicate full marks.***
4) ***Assume suitable data if necessary.***

Q1) a) Elaborate Barrel Shifter in ARM-7 with neat sketch. **[9]**

b) Describe on chip ADC configuration process for ARM-7 processor. **[8]**

OR

Q2) a) Comment on memory map of LPC2148 with neat sketch. **[9]**

b) Discuss different conditional flags of ARM-7 processor. **[8]**

Q3) a) Draw a neat block diagram and Describe ARM memory architecture. **[9]**

b) Draw the neat interfacing diagram elaborate the operation of four digit multiplex 7- segment LED interfacing with LPC2148. **[9]**

OR

Q4) a) Comment on AMBA bus protocol. **[9]**

b) Draw the neat interfacing diagram elaborate the operation of relay interfacing with LPC2148. **[9]**

Q5) a) Draw the neat interfacing diagram elaborate the operation of GPS module interfacing with LPC2148. **[9]**

b) Describe the function of EQU, AREA, SPACE, ALIGN assembler directives. **[8]**

OR

Q6) a) Draw the neat interfacing diagram elaborate the operation of EEPROM AT24CXX interfacing with LPC2148. **[9]**

b) Differentiate between ARM and THUMB states. **[8]**

P.T.O.

Q7) It is decided to design greenhouse monitoring and controlling system. Develop the system using LPC2148 ARM-7 microcontroller to display the parameters like temperature, humidity, light and soil moisture on LCD display. Provide the facility to change the set points and communicate the information to the farmer through SMS. For this system,

a) Enlist selected sensors. **[3]**

b) Develop block diagram. **[5]**

c) Elaborate the operation of the system with respect to block diagram. **[5]**

d) Develop the algorithm for the system. **[5]**

OR

Q8) It is decided to design home automation system. Identify different parameters for home automation system. Develop the system using LPC2148 ARM-7 microcontroller to display the parameters on LCD display, Provide the facility to communicate the information through SMS. For this system,

a) Identify different parameters for home automation system. **[3]**

b) Enlist selected sensors. **[3]**

c) Develop block diagram. **[4]**

d) Elaborate the operation of the system with respect to block diagram. **[4]**

e) Develop the algorithm for the system. **[4]**

Total No. of Questions : 8]

SEAT No. :

PB-2354

[Total No. of Pages : 2

[6263]-203

B.E. (Instrumentation & Control)

ELECTRIC VEHICLES

(2019 Pattern) (Semester - VIII) (406270 A) (Elective - V)

Time : 2½ Hours] ***[Max. Marks : 70***

Instructions to the candidates:

1) ***Answer Q1 or Q2, Q3 or Q4, Q5 or Q6 or Q7 or Q8.***
2) ***Neat diagrams must be drawn wherever necessary.***
3) ***Figures to the right side indicate full marks.***
4) ***Assume suitable data, if necessary.***

Q1) a) Draw the configuration and control of Induction Motor drives and brief. **[9]**

b) Describe the configuration and control of Permanent Magnet Motor drives. **[9]**

OR

Q2) a) List electric components used in hybrid and electric vehicles. **[9]**

b) Draw & explain Configuration and control of DC Motor drives. **[9]**

Q3) a) Hybridization of different energy storage devices. - Elaborate **[9]**

b) Explain following components with respect to Sizing : Propulsion motor. **[9]**

OR

Q4) a) Explain following components with respect to Sizing: Power electronics. **[9]**

b) Explain following components with respect to Sizing: Selecting the energy storage technology. **[9]**

Q5) a) Write a short note on: Case study of 4 wheeler vehicles in EVs. **[9]**

b) Write a short note on: Hybrid (ICE & others). **[9]**

P.T.O.

OR

Q6) a) Write a short note on: Case study of 3 wheeler in EV. **[9]**

b) Write a short note on : Solar Powered Vehicles. **[9]**

Q7) a) Examine the energy management strategies used in hybrid and electric vehicles. **[8]**

b) Classify different energy management strategies. **[8]**

OR

Q8) a) List & explain the various charging techniques. **[8]**

b) Analyze implementation issues of energy management strategies. **[8]**

Total No. of Questions : 8]

SEAT No. :

PB-2355

[Total No. of Pages : 2

[6263]-204

B.E. (Instrumentation and Control)

SAFETY INSTRUMENTATION SYSTEMS

(2019 Pattern) (Semester - VIII) (406270 B) (Elective - V)

Time : 2½ Hours] ***[Max. Marks : 70***

Instructions to the candidates:

1) ***Answer Q1 or Q2, Q3 or Q4, Q5 or Q6 or Q7 or Q8.***
2) ***Neat diagrams must be drawn wherever necessary.***
3) ***Figures to the right side indicate full marks.***
4) ***Assume suitable data, if necessary.***

Q1) a) Define the Scrubbers and Flares? Describe with neat block diagram the Wet Scrubber process. **[9]**

b) Describe the Safety requirements specifications (SRS) in detail. **[9]**

OR

Q2) a) Discuss the SIS related to Fire and Gas (F&G) Systems. **[9]**

b) Describe with neat block diagram of ideal & reality protection layer. **[9]**

Q3) a) Discuss the issues of LOPA in detail. **[9]**

b) Elaborate the process steps of As Low As Reasonably Practical (ALARP). **[9]**

OR

Q4) a) Examine the Layer of Protection Analysis (LOPA) assessment with neat block diagram. **[9]**

b) Describe the Risk Graph of SIL determination method with neat diagrams. **[9]**

Q5) a) Describe some common techniques and tools used for analyzing failure modes and assessing their impact on safety and reliability? **[8]**

b) Elaborate the Fault Tree analysis with the help of block diagram. **[9]**

OR

P.T.O.

Q6) a) Discuss the Consequence Analysis of hazardous incidents. **[8]**

b) What are the different methods of Modelling? Elaborate any one in detail. **[9]**

Q7) a) Discuss the Operation and Maintenance Procedures for safe operation. **[8]**

b) Elaborate the Scope of Analysis of safety life cycle. **[9]**

OR

Q8) a) Discuss the Case Description of Furnace/Fired Heater Safety Shutdown System. **[8]**

b) Describe the Installation, Commissioning and Pre-startup Tests. **[9]**

Total No. of Questions : 8]

SEAT No. :

PB-2356

[Total No. of Pages : 2

[6263]-205

B.E. (Instrumentation and Control)

RENEWABLE ENERGY SYSTEM

(2019 Pattern) (Semester - VIII) (Elective - V) (406270C)

Time : 2½ Hours] *[Max. Marks : 70*

Instructions to the candidates:

1) ***Solve Q1 or Q2, Q3 or Q4, Q5 or Q6, Q7 or Q8.***
2) ***Figures to the right side indicate full marks.***
3) ***Neat diagrams must be drawn wherever necessary.***
4) ***Use of Calculator is allowed.***
5) ***Assume suitable data, if necessary.***

Q1) a) State the significance of batteries in Renewable System. Elaborate on the charging technique for batteries with neat diagram. **[10]**

b) Elaborate the working of Fuel Cells with neat diagram. **[7]**

OR

Q2) a) State the significance of energy storage system in renewable system. Elaborate the working of Pb-Acid Rechargeable battery with neat diagram. **[10]**

b) Elaborate the working of Fly Wheels with neat diagram. **[7]**

Q3) a) What is solar panel? How solar panel is manufactured from solar cell? Elaborate on the Solar Panel selection and array design. **[10]**

b) With a neat diagram, explain the concept of MPPT Algorithm. **[8]**

OR

Q4) a) What is Solar Photovoltaic System? State the need of Solar Photovoltaic System? Explain the working of Solar Photovoltaic System with neat diagram. **[10]**

b) With a neat diagram, explain the working of power Converter. **[8]**

P.T.O.

Q5) a) State the applications of Renewable Energy. Explain the working of Rooftop solar photovoltaic system with neat diagram. **[10]**

b) Elaborate on the working of solar electric vehicles with neat diagram.**[7]**

OR

Q6) a) Justify how renewable energy is efficient from application point of view. Elaborate on the working of solar powered UPS system with neat diagram. **[10]**

b) Elaborate on the working of Grid tied Inverter with neat diagram. **[7]**

Q7) a) State the significance of hybrid wind energy system. Draw and explain the working of wind + photovoltaic system with neat system. **[10]**

b) State the significance of models in wind pattern prediction Elaborate on various models to predict wind pattern and their analysis. **[8]**

OR

Q8) a) State the significance of wind energy. Describe the wind energy conversion technology with neat diagram. **[10]**

b) Elaborate the concept of Wind farm with neat diagram. **[8]**

Total No. of Questions : 8]

SEAT No. : [ ]

PB2357

[Total No. of Pages : 2

[6263]-207

B.E. (Instrumentation & Control)

CYBER SECURITY

(2019 Pattern) (Semester - VIII) (406271A) (Elective - VI)

Time : 2½ Hours] ***[Max. Marks : 70***

Instructions to the candidates:

1) ***Answer Q.1 or Q.2, Q.3 or Q.4, Q.5 or Q.6, Q.7 or Q.8.***
2) ***Neat diagrams must be drawn wherever necessary.***
3) ***Figures to the right indicate full marks.***
4) ***Use of Calculator is allowed.***
5) ***Assume suitable data if necessary.***

Q1) a) Explain cryptographic hash functions. **[10]**

b) Explain Diffie-Hellman key exchange algorithm. **[8]**

OR

Q2) a) Explain in detail RSA algorithm along with its advantages and disadvantages. **[10]**

b) Describe in brief elliptic curve cryptography. **[8]**

Q3) a) Explain Needham Schroeder algorithm and Kerberos. **[9]**

b) Explain Firewall: Different types and functionalities. **[8]**

OR

Q4) a) Explain IP Security: IPv6 and IPSec. **[9]**

b) Explain Web Security: SSL, HTTPS. **[8]**

P.T.O.

Q5) a) Explain quantitative vs. qualitative risk control practices. **[10]**

b) Explain Laws and Ethics in Information Security. **[8]**

OR

Q6) a) Explain cloud computing and cybercrime. **[10]**

b) Describe risk identification, risk assessment, risk control strategies in detail. **[8]**

Q7) a) Explain windows forensic analysis. **[9]**

b) Explain network forensics. **[8]**

OR

Q8) a) Explain cyber crime investigation. **[9]**

b) Explain mobile forensics. **[8]**



Total No. of Questions : 8]

SEAT No. : [ ]

PB2358

[Total No. of Pages : 2

[6263]-208

B.E. (Instrumentation & Control)

AUTOMATION IN AGRICULTURE

(2019 Pattern) (Semester - VIII) (Elective - VI) (406271B)

Time : 2½ Hours] ***[Max. Marks : 70***

Instructions to the candidates:

1) ***Answer Q.1 or Q.2, Q.3 or Q.4, Q.5 or Q.6, Q.7 or Q.8.***
2) ***Neat diagram must be drawn whenever necessary.***
3) ***Figure to the right candidates indicate full marks.***
4) ***Use of logarithmic tables slide rule, mollier charts, electronic pocket calculator and steam table is allowed.***
5) ***Assume suitable data, if necessary.***

Q1) a) Enlist various sensors used in a Green house. Explain any two of them in detail. **[8]**

b) What are the various heating and cooling methodologies used in green house? **[9]**

OR

Q2) a) Write a short note on:

i) Gypsum Block **[5]**

ii) Resistance based method for Soil Moisture Measurement **[5]**

b) Explain the need of irrigation in India. Explain Micro-irrigation methods in detail. **[7]**

Q3) a) Draw the detailed process flow diagram for the Sugar Industry. **[8]**

b) What are the various uses of Ethanol? With a neat diagram explain the process for manufacturing Ethanol from Molasses. **[10]**

OR

Q4) a) Draw and explain Process Flow Diagram of Milk Processing in Dairy Plant. **[10]**

b) Explain the automation used in Juice Extraction in a Sugar Factory. **[8]**

P.T.O.

Q5) a) Define food Quality. What are the various benefits of implementing Quality Assurance policies in Food Industry? **[8]**

b) What is the significance of standardization in food industry? Write a short note on Food Safety and Standards Bill 2005. **[9]**

OR

Q6) a) Write a short note on: Agmark Standards. **[5]**

b) Write a short note on: BIS Standards. **[5]**

c) Explain various design considerations for Cold Storage? **[7]**

Q7) a) Explain various trends in modern food industry. **[8]**

b) Enlist various equipments used for creating and maintaining the controlled atmosphere. Explain any two equipments in detail. **[10]**

OR

Q8) a) Explain how PLC and SCADA are used in the Food Industry. **[10]**

b) Write a short note on Controlled Atmosphere Storage. **[8]**



Total No. of Questions : 8]

SEAT No. :

PB2359

[Total No. of Pages : 2

[6263]-209

B.E. (Instrumentation and Control)

ENVIRONMENTAL INSTRUMENTATION

(2019 Pattern) (Semester - VIII) (Elective - VI) (406271C)

Time : 2½ Hours] *[Max. Marks : 70*

Instructions to the candidates:

1) ***Solve Q.1 or Q.2, Q.3 or Q.4, Q.5 or Q.6, Q.7 or Q.8.***
2) ***Figures to the right side indicate full marks.***
3) ***Neat diagrams must be drawn wherever necessary.***
4) ***Use of Calculator is allowed.***
5) ***Assume Suitable data if necessary.***

Q1) a) Discuss sedimentation and flocculation process and coagulation in details in context to instrumentation. **[10]**

b) What are advances in above in instrumentation perspectives? **[7]**

OR

Q2) a) How ground water monitoring has relation of instrumentation and associated software-elaborate. **[10]**

b) How instrumentation will monitor the soil contamination? Discuss. **[7]**

Q3) a) Discuss waste water treatment in context to a Textile OR a cosmetic industry in details. **[10]**

b) How waste water mixing in river has dangerous effects from house-hold waste - discuss. **[8]**

OR

Q4) a) Discuss in detail waste water treatment instrumentation with detailed diagram. **[10]**

b) Discuss role of NGOs in rain water harvesting in your city or state. **[8]**

P.T.O.

Q5) a) Which different parameters hamper energy-environment relation-discuss in details. **[10]**

b) Discuss different air pollutants-list - what is their impact on health? **[7]**

OR

Q6) a) Discuss design of a sensor working principle for any air pollutant. How will you modify its sensing for advanced instrumentation for monitoring? **[10]**

b) Control of air or noise pollution - write a detailed note on. **[7]**

Q7) a) How will you design a weather station for your institution - elaborate - which instruments you will choose, website display- which parameters will you show, how many updates? **[10]**

b) Comment on global environmental analysis and its adverse effects on health and nature. **[8]**

OR

Q8) a) How virtual instrumentation in environmental engineering is useful - discuss with an example. **[10]**

b) Discuss REMS Rover Environmental Monitoring Station or equivalent instruments used by India. **[8]**



Total No. of Questions : 8]

SEAT No. :

PB-2360

[Total No. of Pages : 6

[6263]-210

B.E. (Mechanical)

HEATING, VENTILATION, AIR CONDITIONING AND REFRIGERATION

(2019 Pattern) (Semester - VII) (402041)

Time : 2½ Hours] *[Max. Marks : 70*

Instructions to the candidates :

1) ***Solve Q.1 or Q.2, Q.3 or Q.4, Q.5 or Q.6 and Q.7 or Q.8.***
2) ***Neat diagrams must be drawn wherever necessary.***
3) ***Figures to the right side indicate full marks.***
4) ***Use of scientific calculator is allowed.***
5) ***Assume suitable data, if necessary.***

Q1) a) Explain with a neat sketch Thermostatic Expansion Valve. **[6]**

b) Explain with neat schematic Simple Ejector Refrigeration System. **[5]**

c) Discuss the following terms used in thermodynamics analysis of Simple Ejector Refrigeration Cycle. **[6]**

i) Entrainment Ratio

ii) Entrainment efficiency

iii) Nozzle Efficiency

OR

Q2) a) Explain with neat sketch flooded type evaporator. **[6]**

b) Explain with neat schematic the frost control circuit used in VCR cycle. **[6]**

c) Explain with neat schematic CO_2 trans critical cycle. **[5]**

P.T.O.

Q3) a) Explain in detail the "decrement factor" and "time lag". **[8]**

b) A conference room for sitting 100 persons is to be maintained at 22 °C DBT and 60% relative humidity. The outdoor conditions are 40 °C DBT and 27 °C WBT. The various loads in the auditorium are as follows:**[10]**

Sensible and latent heat loads per person 80 W and 50 W respectively; lights and fans, 15000 W;

sensible heat gain through glass ceiling etc. 15000 W.

The air infiltration is 20 m^3/min and fresh air supply is 100 m^3/min.

Two-third of recirculated room air and one-third of fresh air are mixed before entering the cooling coil.

The bypass factor of the coil is 0.1.

Determine

i) Apparatus dew point,

ii) Grand total heat load and

iii) Effective room sensible heat factor

OR

Q4) a) What is CLTD method? How it connects with time lag and decrement factor? **[8]**

b) Atmospheric air at 30 °C dew point temperature and 75% relative humidity, enters a cooling coil at a rate of 200 m^3/min. The coil dew point temperature is 14 °C and the by-pass factor of the coil is 0.1. Determine: **[10]**

i) The temperature of air leaving the cooling coil;

ii) The capacity of the cooling coil in TR and in kW;

iii) The amount of water vapour removed per minute; and

iv) The sensible heat factor for the process

Q5) a) Define the following as applied to "Air Distribution System" Intake, Outlet, Grille, Register, Diffuser, Filter, Throw and Primary Air. **[8]**

b) Using equal Friction pressure drop method and friction chart estimate the diameter and velocity pressure in AB, BC, CD, BE, CF Duct sections. Take the assumption if any. **[10]**

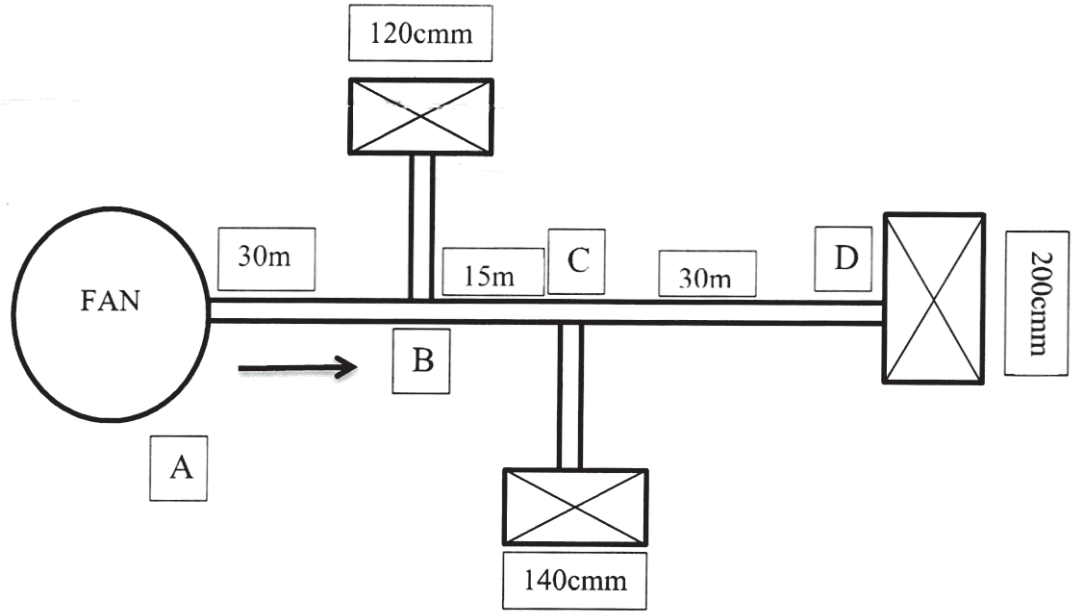

OR

Q6) a) Explain FAN Laws. With neat sketch explain the working of AHU. **[8]**

b) A circular Duct of ϕ 400 mm is selected to carry air at a velocity 440 m/min. If duct is replaced by rectangular Duct of aspect ratio 1.5. Find the size of rectangular duct for equal friction when;

i) Velocity in two Duct is same.

ii) Discharge in two Duct is same.

If $f = 0.015$, Find the pressure loss per 100m length of Duct. Take density of air = 1.15 kg/m^3. **[10]**

Q7) a) Explain with neat sketch Variable Refrigerant Flow (VRF) air conditioning system. **[6]**

b) Explain with neat sketch all year round air conditioning system. **[6]**

c) State the factors to be considered while selecting a system of air conditioning. **[5]**

OR

Q8) a) What is Heat pump? Write down different circuits of heat pump and Industrial applications of heat pump. **[6]**

b) Explain with neat diagram Direct evaporative cooling air conditioning system. **[6]**

c) Compare all air-air conditioning system with all water air conditioning system. **[5]**

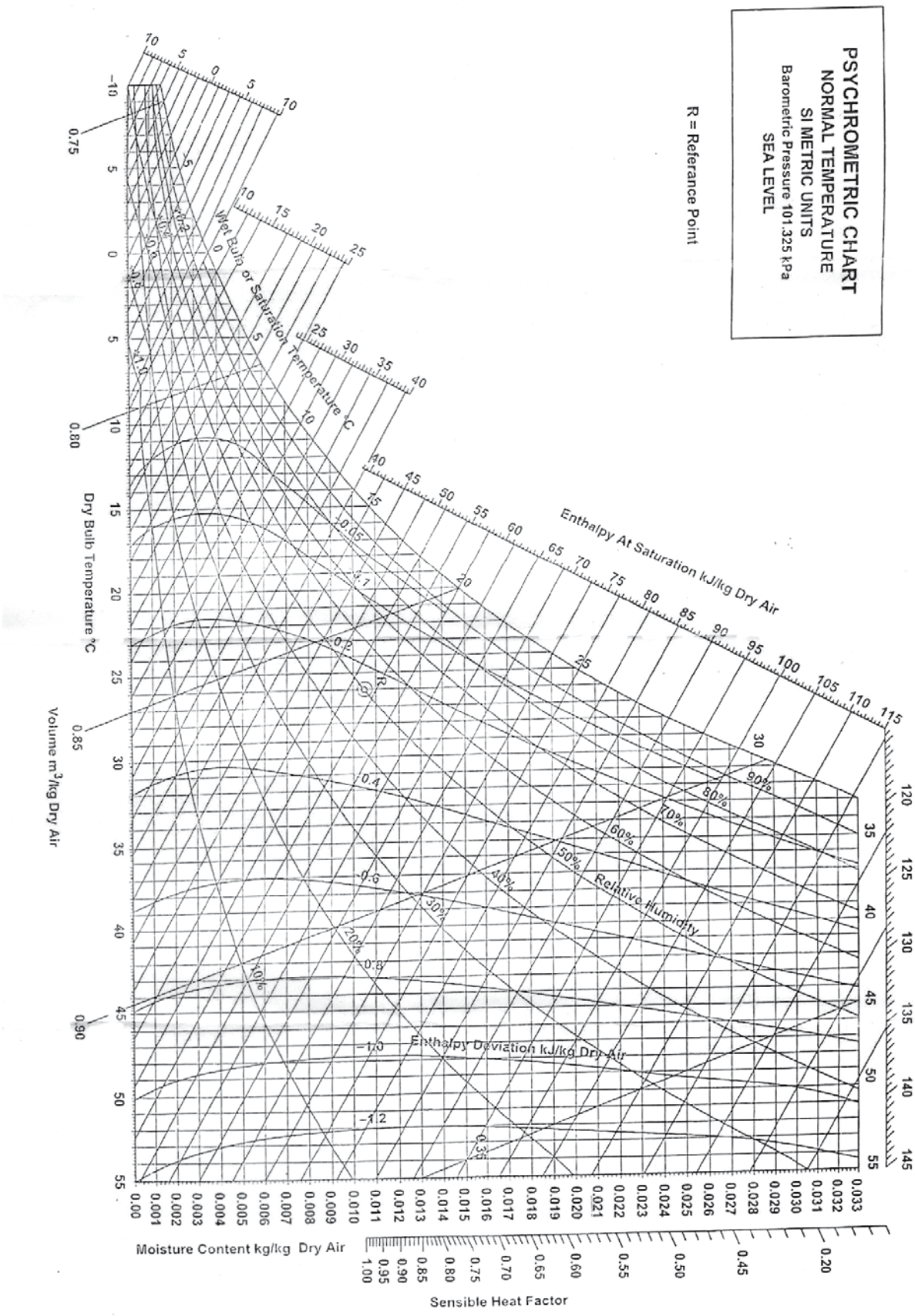
PSYCHROMETRIC CHART
NORMAL TEMPERATURE
SI METRIC UNITS
Barometric Pressure 101.325 kPa
SEA LEVEL
R = Referance Point
Dry Bulb Temperature °C
Wet Bulb or Saturation Temperature °C
Enthalpy At Saturation kJ/kg Dry Air
Relative Humidity
Enthalpy Deviation kJ/kg Dry Air
Moisture Content kg/kg Dry Air
Sensible Heat Factor
Volume m³/kg Dry Air

Friction Chart for Circular Ducts

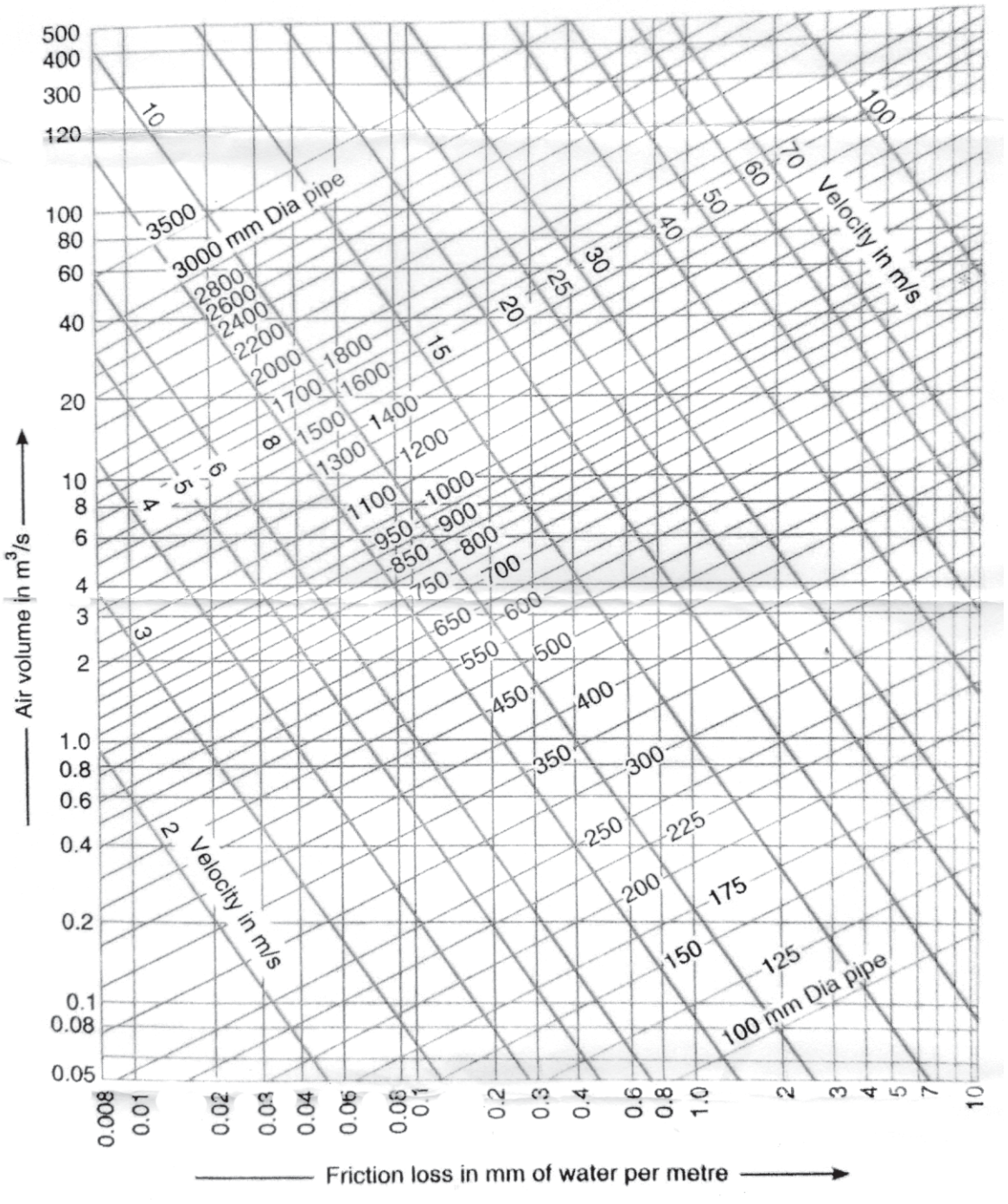

▽▽▽▽

Total No. of Questions : 8]

SEAT No. :

PB2361

[Total No. of Pages : 4

[6263]-211

B.E. (Mechanical Engineering)

DYNAMICS OF MACHINERY

(2019 Pattern) (Semester - VII) (402042)

Time : 2½ Hours] *[Max. Marks : 70*

Instructions to the candidates:

1) ***Answer Q1 or Q2, Q3 or Q4, Q5 or Q6, Q7 or Q8.***
2) ***Neat diagrams must be drawn wherever necessary.***
3) ***Use of logarithmic tables, slide rule, and electronic pocket calculator is allowed.***
4) ***Figures to the right indicate full marks.***
5) ***Assume suitable data, if necessary.***

Q1) a) A combination of seven number of identical springs, each having a stiffness of 'K', supports a mass 'm' as shown in figure 1.Find the natural frequency of oscillations of mass 'm'. **[8]**

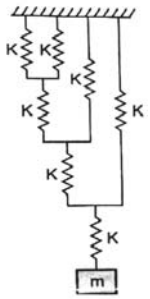

Figure 1.

b) Explain with a neat diagram mathematical model of a Motor Bike. **[5]**

c) Explain the following terms used in vibration **[4]**

i) Natural Frequency

ii) Amplitude

iii) Time period

iv) Resonance

OR

P.T.O.

Q2) a) A body of 5 kg is supported on a spring of stiffness 1960 N/m & has a dashpot connected to it, which produces a resistance of 1.96 N at a velocity of 1 m/sec. In what ratio will be amplitude of vibration reduced after 5 cycles? **[8]**

b) Derive the expression for Logarithmic decrement. **[5]**

c) Define the following terms used in vibration **[4]**

i) Critical Damping coefficient

ii) Coulomb damping

Q3) a) A vibrating system having a mass of 1 kg is suspended by a spring of stiffness 1000 N/m. It is put to harmonic excitation of 10 N. Assuming viscous damping, determine **[10]**

i) resonant frequency

ii) the phase angle at resonance

iii) amplitude of resonance

iv) frequency corresponding to peak amplitude

v) damped frequency. Take C = 40 N-S/m.

b) Explain Transmissibility Vs. frequency ratio curve for different amounts of damping. **[8]**

OR

Q4) a) The springs of an automobile trailer are compressed 0.1m under its own weight. Find the critical speed when the trailer is passing over a road with a profile of sine-wave whose amplitude is 80 mm and the wavelength is 14 m. Find the amplitude of vibration at a speed of 60 km/hr. **[10]**

b) Derive an expression for deflection of vertical shaft carrying a single rotor without damping. **[8]**

Q5) a) Find the natural frequency of the system shown in figure 2. **[10]**

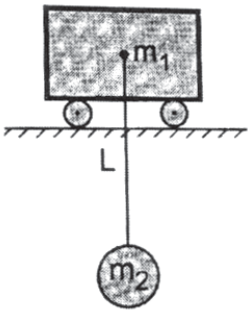

Figure. 2

b) Derive the equation for the length of Torsionally Equivalent Shaft. **[8]**

OR

Q6) a) Using Matrix Method, determine only the natural frequencies of the system shown in figure. 3 **[10]**

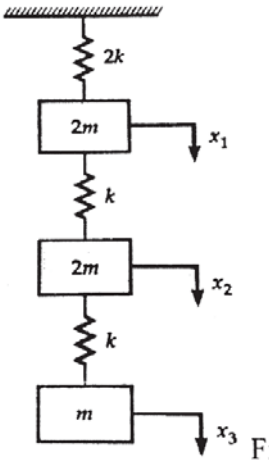

Figure 3.

b) Explain free vibrations of a two rotor system using following parameters **[8]**

i) neat diagram

ii) frequency equations

iii) Position of node

iv) amplitude ratios of two rotors.

Q7) a) Differentiate Time domain and frequency domain Analysis. Explain how frequency spectrum can be used to detect vibration related faults in a system. **[8]**

b) Write a short note on piezoelectric accelerometer. **[5]**

c) Explain any one vibration isolator with a neat sketch. **[4]**

OR

Q8) a) Derive a relation between sound intensity level and sound pressure level. **[8]**

b) Explain anechoic chamber and reverberant chamber. **[5]**

c) Define the following terms **[4]**

i) Sound absorption coefficient

ii) Sound transmission coefficient.



Total No. of Questions : 8]

SEAT No. :

PB-2362

[Total No. of Pages : 3

[6263]-212

B.E. (Mechanical Engg.) (End Sem.)

TURBOMACHINERY

(2019 Pattern) (Semester - VII) (402043)

Time : 2 Hours] *[Max. Marks : 50*

Instructions to the candidates:

1) ***Answer Q.1 or Q.2, Q.3 or Q.4, Q.5 or Q.6, Q.7 or Q.8.***
2) ***Neat diagrams must be draw wherever necessary.***
3) ***Figures to the right side indicate full marks.***
4) ***Assume suitable data, if necessary.***

UNIT - I

Q1) a) Explain the functions of following 1. casing of Pelton wheel 2. Notch of bucket 3. Governing mechanism **[6]**

b) A jet of water moving with V m/s strikes at the centre of a curved vane which is moving with u m/s. If the outgoing jet makes an angle θ with the incoming jet, prove that **[8]**

i) Maximum efficiency, $\eta_{max} = \frac{8}{27}(1+\cos\theta)$

ii) Blade speed, $u = \frac{V}{3}$

OR

Q2) a) Compare Francis and Kaplan Turbine. **[6]**

b) The extemal and internal diameters of an inward flow reaction turbine are 2m and 1m respectively. The head on the turbine is 60 m. the width of the vane at inlet and outlet are same and equal to 0.25 m. The runner vanes are radial at inlet and discharge is radial at outlet. The speed is 200 rpm and the discharge is 6 m^3/sec. Determine : **[8]**

i) The vane angle at outlet of the runner and guide blade angle at inlet.

ii) The hydraulic efficiency.

P.T.O.

UNIT - II

Q3) a) Explain in brief different losses in steam turbine. **[4]**

b) Following data refer to the single row of impulse steam turbine mean diameter of the blade ring = 1.1 m, Speed = 3000rpm, Nozzle angle = 17 deg., ratio of blade velocity to the steam velocity = 0.45, blade friction factor = 0.82, Blade angle at exit is less by 3 deg to that at inlet, steam mass flow rate = 10.2 kg/s. Draw a velocity diagram and find the following: **[8]**

i) Blade angles at inlet and outlet

ii) Tangential force

iii) Axial force

iv) Power developed.

OR

Q4) a) Explain nozzle governing with sketch. **[4]**

b) Steam enters an impulse wheel having a nozzle angle of 20° at a velocity of 450 m/s. The exit angle of moving blades is 20° and relative velocity of steam may be assumed to remain constant over the moving blades. If the blade speed is 180 m/s, determine : **[8]**

i) Blade angle at inlet,

ii) Work done/kg of steam,

iii) Power developed when the turbine is supplied with 1.8 kg/s of steam

iv) Diagram efficiency

UNIT - III

Q5) a) Explain different types of impellers used for centrifugal pumps. **[6]**

b) A Centrifugal pump having outer diameter equal to two times inner diameter and running at 1200 rpm works against a total head of 75 m. The velocity of flow through the impeller is constant and is equal to 3 m/s. The vanes are set back at width at an angle of 30° at outlet. If the outer diameter of the impeller is 600 mm and width at outlet is 50 mm. Determine : **[6]**

i) Vane angle at inlet

ii) Work done per second by impeller.

iii) Manometric efficiency

OR

Q6) a) What do you mean by cavitation? Explain the phenomenon of cavitation in centrifugal pump. **[6]**

b) A Centrifugal pump running at 900 rpm is working against a head 20m. The external diameter of the impeller is 460 mm and outlet width is 50 mm. If the vane angles at outlet is 40°and manometric efficiency is 70%. Determine the following : **[6]**

i) Flow velocity at outlet

ii) Absolute velocity of water leaving the vane

iii) Angle made by the absolute at outlet with the direction of motion at outlet.

iv) Rate of flow through the pump.

UNIT - IV

Q7) a) Explain Construction and working of centrifugal compressor with neat diagram. **[6]**

b) A centrifugal compressor delivers 16.5 kg/s of air with a total head pressure ratio of 4:1. The speed of the compressor is 15000 rpm. Inlet total head temperature is 20 C, slip factor 0.9, power input factor 1.04 and 80% isentropic efficiency. Calculate : **[6]**

i) Overall diameter of impeller

ii) Power Input

OR

Q8) a) Explain in detail surging and choking phenomenon in centrifugal compressor. **[6]**

b) The impeller of the centrifugal compressor has the inlet and outlet diameter of 0.3 and 0.6 m respectively. The intake is from the atmosphere at 100 kPa and 300 K, without any whirl component. The outlet blade speed is 10000 rpm and velocity of flow is constant at 120 m/s. If the blade width at inlet is 6 cm, calculate : **[6]**

i) Specific work

ii) Exit pressure, outlet Blade Angle = 75º

⌘⌘⌘

Total No. of Questions : 8]

SEAT No. :

PB2363

[Total No. of Pages : 2

[6263]-213
B.E.(Mechanical Engineering)
AUTOMOBILE DESIGN
(2019 Pattern) (Semester-VII) (Elective-III) (402044 A)

Time : 2½ Hours] *[Max. Marks : 70*

Instructions to the candidates:

1) ***Solve Q.1 or Q.2, Q.3 or Q.4, Q.5 or Q.6, Q.7 or Q.8.***
2) ***Neat diagrams must be drawn wherever necessary.***
3) ***Figures to the right indicate full marks.***
4) ***Use of electronic pocket calculator is allowed.***
5) ***Assume Suitable data, if necessary.***

Q1) a) Explain the following with neat labeled diagram: **[12]**

i) Semi-floating rear shafts.

ii) Three quarter floating rear shafts.

b) Write the difference between live axle and dead axle. **[6]**

OR

Q2) a) A pair of bevel gears transmitting 7.5 kW at 300 rpm is shown in Fig 2a. The pressure angle is 20°. Determine the components of the resultant gear tooth force and draw a free-body diagram of forces acting on the pinion and the gear. **[6]**

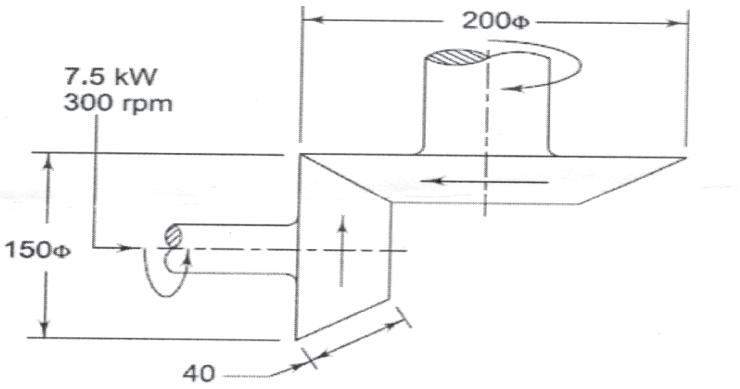

b) Differentiate between semi floating and full floating axle. **[6]**

c) Write the function of reversibility of steering. **[6]**

P.T.O.

Q3) a) Explain "how the tyres are classified and rated? **[6]**

b) Explain the hydraulic braking system with neat sketch. **[5]**

c) Explain and illustrate the construction of disc type wheel. **[6]**

OR

Q4) a) Explain following types of brakes with neat diagram: **[9]**

i) Hydraulic brakes,

ii) Servo brakes,

iii) Air brakes.

b) Explain ABS (Antilock Braking System) in detail. Also state its advantages over hydraulic brake system. **[8]**

Q5) a) Differentiate between independent suspension and conventional suspension system. **[9]**

b) Explain with neat sketch MacPherson strut front independent suspension system. **[9]**

OR

Q6) a) Explain the interconnected suspension system. **[6]**

b) Explain the working and construction of the shock absorber. **[6]**

c) Write short note on Leaf spring. **[6]**

Q7) a) Write note on the following: **[8]**

i) Occupant Packaging.

ii) Anthropometry

b) Describe and illustrate the steps involved in driver package development. **[9]**

OR

Q8) a) Explain with neat sketch Entry and Exit considerations of driver for any type of vehicle. **[6]**

b) Discuss applications of biomechanics in vehicle. **[5]**

c) Write a short note on 3-point Seat Belt. **[6]**



Total No. of Questions : 8]

SEAT No. :

PB2364

[Total No. of Pages : 2

[6263]-214

B.E.(Mechanical Engineering)

DESIGN OF HEAT TRANSFER EQUIPMENTS

(2019 Pattern) (Semester-VII) (Elective-III) (402044 B)

Time : 2½ Hours] *[Max. Marks : 70*

Instructions to the candidates:

1) ***Solve Q.1 or Q.2, Q.3 or Q.4, Q.5 or Q.6 and Q.7 or Q.8.***
2) ***Use of thermodynamic table and charts.***
3) ***Assume Suitable data, if necessary.***
4) ***Figures to right indicate full marks..***

Q1) a) Explain the construction and working of shell. and Tube Heat exchangers. **[9]**

b) Consider a shell and tube heat exchanger. Air with a flow rate of 1.5 kg/s at 500ºC and at atmospheric Pressure flows through 200 parallel tubes: Each tabe has an internal diameter of 2 cm and length of 4m. Assume that the $D/D_0 = 0.5$ data can be used for the contraction and enlargement. The outlet temprature of the cooled air is 100ºC Calculate the pressure drop for **[9]**

i) The abrupt contraction and

ii) Friction

OR

Q2) a) What are the various sources of a Noise in a heat exchanger? How it can be minimized. **[9]**

b) Water at a rate of 45,500 kg/hr is heated from 80ºC to 150ºC in a shell-and-tube heat exchanger having two shell passes and eight tube basses with a total surface area of 925m^2. Hot exhaust gases having approximately the same thermal physical properties as air enter at 350ºC and exit at 175ºC Determine the overall heat transfer coefficient based on outside surface area. **[9]**

Q3) a) Describe the working principle and basic components of Refrigeration system. **[9]**

b) Explain in brief the thermal analysis of Evaporator. **[8]**

P.T.O.

OR

Q4) a) Write & Explain the design parameters consideration of heat exchangers for application in refrigeration system. **[9]**

b) Differentiate between regenerator and recuperator and state their scope of application. **[8]**

Q5) a) State & Explain the objectives of design of compact heat exchangers. **[9]**

b) In a tube in tube type parallel flow heat exchanger, the hot water at 80ºC is cooled to 65ºC by cold water entering the heat exchanger at 20ºC and leaving at 35ºC. What would be the exit tempratures if the flow rates of water are doubled. **[9]**

OR

Q6) a) State the different methods of cleaning of Heat exchagers. **[9]**

b) Write short notes on following **[9]**

i) Plate fin Heat exchanger.

ii) Tube fin Heat exchanger.

iii) Multipass Heat exchager.

Q7) a) What is a direct contact type heat exchager? give some examples. **[8]**

b) What do you understand by fouling of heat exchanger? How does it affect the performance of heat exchanger. **[9]**

OR

Q8) a) Explain & Write short notes on following. **[8]**

i) Desuperhcater

ii) Jet condenser

b) Explain the design parameters. Consideration of cooling towers. **[9]**



Total No. of Questions : 8]

SEAT No. :

PB-2365

[Total No. of Pages : 2

[6263]-215

B.E. (Mechanical Engineering)

MODERN MACHINING PROCESSES

(2019 Pattern) (Semester - VII) (Elective - III) (402044C)

Time : 2½ Hours] *[Max. Marks : 70*

Instructions to the candidates:

1) ***Answer Q1 or Q2, Q3 or Q4, Q5 or Q6 or Q7 or Q8.***
2) ***Neat diagrams must be drawn wherever necessary.***
3) ***Figures to the right side indicate full marks.***
4) ***Assume suitable data, if necessary.***

Q1) a) Explain in detail with suitable sketch of electro chemical grinding. Also write merits, demerits and applications. **[9]**

b) Explain the chemical machining process with principle, construction, working process parameters and applications. **[8]**

OR

Q2) a) Explain in detail photochemical machining process with principle, construction, working process parameters. **[8]**

b) Differentiate electro chemical machining and photochemical machining process. **[5]**

c) Write in brief about electrolytes used in ECM process. **[4]**

Q3) a) Explain in detail with suitable sketch of electro chemical discharge machining. Also discuss the effect of process parameters, merits, demerits and applications. **[9]**

b) Explain with the suitable sketch principle used in EDM. Also describe in brief the effect of any two process parameter on material removal rate.**[9]**

OR

P.T.O.

Q4) a) Explain electric discharge diamond grinding with suitable sketch. **[8]**

b) Explain the principle of w- EDM with suitable sketch. **[6]**

c) Differentiate electrical discharge grinding and electro discharge diamond grinding. **[4]**

Q5) a) Explain micro turning with suitable sketch. Also discuss the advantages, disadvantages and applications. **[8]**

b) Explain micro drilling machining process with principle, construction, working process parameters and applications. **[9]**

OR

Q6) a) Explain with suitable sketch diamond turn machining process. **[8]**

b) Explain micro EDM tool manufacturing with suitable sketch. **[5]**

c) Compare micro milling and micro drilling. **[4]**

Q7) a) Explain Magnetic Abrasives Finishing with principle, construction, working process parameters and applications. **[9]**

b) Explain Magnetorheological Finishing with principle, construction, working process parameters and applications. **[9]**

OR

Q8) a) Explain photolithography process in details. **[8]**

b) Explain microsystem with suitable application. **[6]**

c) Compare Magnetorheological Finishing and Magnetic Abrasives Finishing. **[4]**

Total No. of Questions : 8]

SEAT No. :

PB-2366

[Total No. of Pages : 3

[6263]-216

B.E. (Mechanical)

INDUSTRIAL ENGINEERING

(2019 Pattern) (Semester - VII) (402044D) (Elective - III)

Time : 2½ Hours] *[Max. Marks : 70*

Instructions to the candidates:

1) ***Answer Q1 or Q2, Q3 or Q4, Q5 or Q6 or Q7 or Q8.***
2) ***Figures to the right side indicate full marks.***
3) ***Use of electronic calculator is allowed.***
4) ***Assume suitable data, if necessary.***

Q1) a) Sketch and explain in brief Material flow patterns. **[6]**

b) Explain product layout with advantage and disadvantage. **[6]**

c) Summarize the different principles of material handling? **[6]**

OR

Q2) a) Define plant location .Describe the factors to be considered while finalizing the plant location with suitable illustration. **[9]**

b) Explain different material handling equipment's with their application. **[9]**

Q3) a) Write short notes on : **[8]**

i) Assembly line balancing technique

ii) Capacity Planning

b) Explain the need for forecasting. **[9]**

The past data about the load on a machine center is as given below :

Month	Sells of cars
1	585
2	611
3	656
4	748
5	863
6	914
7	964

i) If a five month moving average is used to forecast the next month's demand, compute the forecast of the load on the center in the 8th month.

ii) Compute a weighted three moving average for the 8th month, where the weights are 0.5 for the latest month, 0.3 and 0.2 for the other months, respectively.

P.T.O.

OR

Q4) a) Enlist different types of production? Describe various functions of Production Planning & Control. **[8]**

b) A dealership for Skoda cars sells a particular model of the car in various months of the year shown in the tablebelow. Estimate the forecast for the month of October 2022 Using (Take period n =3) **[9]**

i) Moving average method

ii) Exponential smoothing method(Take exponential smoothing constant as 0.2)

iii) Comment on the results of above methods.

Month	Sells of cars
Jan 2022	80
Feb 2022	65
March 2022	90
April 2022	70
May 2022	80
June 2022	100
July 2022	85
August 2022	60
September 2022	75

Q5) a) Write short notes on (i) Just-In-Time (JIT) (ii) MRP-I (iii) Supply chain management - SCM. **[9]**

b) Annual requirement of an item is 2400 units. Each item costs the company Rs.6. The manufacturer offers discount of 5% if 500 or more quantities are purchased. The ordering cost is Rs 32/- per order and inventory cost is 16%. Weather it is a advisable to accept the discount? Comment **[9]**

OR

Q6) a) The annual demand for an item is 3200 parts. The unit cost is Rs. 6 and the inventory carrying charges are estimated as 25% per annum. If the cost of one procurement is Rs. 150. Calculate **[9]**

i) EOQ

ii) Number of orders per year

iii) Time between two consecutive order

iv) The optimal cost

b) Explain any three selective control techniques of inventory? **[9]**

Q7) a) Describe the principles of ergonomics. **[5]**

b) Explain the steps involved in job evaluation. **[6]**

c) Write short a note on the "KRA". **[6]**

OR

Q8) a) Elaborate the term "merit rating"? Explain any 4 methods of merit rating? **[9]**

b) What is performance appraisal? Enlist various performance appraisal methods. Explain Rapid upper limb assessment (RULA) with level of MSD risk. **[8]**

Total No. of Questions : 8]

SEAT No. :

PB-2367

[Total No. of Pages : 2

[6263]-217

B.E. (Mechanical Engineering)

COMPUTATIONAL FLUID DYNAMICS

(2019 Pattern) (Semester - VII) (402044F) (Elective - III)

Time : 2½ Hours] *[Max. Marks : 70*

Instructions to the candidates:

1) ***Solve Q.1 or Q.2, Q.3 or Q.4, Q.5 or Q.6, Q.7 or Q.8***
2) ***Neat diagrams must be drawn wherever necessary.***
3) ***Figures to the right indIcate full marks.***
4) ***Use of electronic pocket calculator is allowed.***
5) ***Assume suitable data, if necessary.***

Q1) a) Describe and illustrate the solution of two dimensional steady heat convection-diffusion equation. **[9]**

b) What is Peclet number? State it's Significance. **[9]**

OR

Q2) a) Show that for two dimensional convective-diffusive equation the CFL condition should be less than or equal to 0.5 for system to remain stable.

$$\frac{\partial \phi}{\partial t} + u\frac{\partial \phi}{\partial x} + v\frac{\partial \phi}{\partial y} = v\left[\frac{\partial^2 \phi}{\partial x^2} + \frac{\partial^2 \phi}{\partial y^2}\right]$$ **[10]**

b) Compare Implicit versus Explicit finite volume method for CFD Modelling. **[8]**

Q3) a) Derive solution of Navier-Stoke' equation for incompressible flow. **[8]**

b) Explain the applications of CFD for external flow over aerfoil simulation. **[9]**

OR

Q4) a) Write Navier-Stoke' equation for incompressible flow and explain each term. **[8]**

b) What is SIMPLE algorithm? Explain in details. **[9]**

Q5) a) Derive Two equation model for Turbulent Flow Modeling. **[10]**

b) What is Scales of turbulence? Explain in details. **[8]**

P.T.O.

OR

Q6) a) Why turbulence modeling is required? Explain any one "two-equation" turbulence model. **[10]**

b) Explain the Large Eddy Simulation (LES) and its applications. **[8]**

Q7) a) Describe applications of Fluid-Structure Interaction with illustrations. **[8]**

b) Explain and illustrate Lagrangian Solid System. **[9]**

OR

Q8) a) What are balance laws in Eulerian form? **[9]**

b) Explain and illustrate mechanical forces and equilibrium for FSI formulation. **[8]**

Total No. of Questions : 8]

SEAT No. :

PB2368

[Total No. of Pages : 2

[6263]-218
B.E. (Mechanical Engineering)
PRODUCT DESIGN & DEVELOPMENT
(2019 Pattern) (Semester-VII) (Elective-IV) (402045A)

Time : 2½ Hours] *[Max. Marks : 70*

Instructions to the candidates:

1) ***Attempt Q1 or Q2, Q3 or Q4, Q5 or Q6, Q7 or Q8.***
2) ***Neat diagrams must be drawn wherever necessary.***
3) ***Use of electronic pocket calculator is allowed.***
4) ***Assume suitable data if necessary.***
5) ***Figures to the right indicate full Marks***

Q1) a) Explain subtract and operate procedure for product teardown process. **[7]**

b) Describe in detail benchmarking. **[6]**

c) Explain Product characteristics in product analysis **[4]**

OR

Q2) a) What is concept selection? Explain Pugh's chart with example. **[7]**

b) Write a short note on SWOT analysis for a selection of profitable product. **[6]**

c) What is product policy of an organization? List down various product policies. **[4]**

Q3) a) What are the basic principles of dimensioning **[7]**

b) Explain BOM with example. **[6]**

c) Define Limit, Tolerance and Fit **[4]**

OR

Q4) a) What is product architecture? Explain types of product architecture. **[7]**

b) List down and explain different elements of production drawing. **[6]**

c) Define Tolerance? describe the types of Tolerances. **[4]**

P.T.O.

Q5) a) List down different design simulation techniques and explain any one. **[8]**

b) What is Rapid prototyping? Define and enlist various methods of prototyping. **[6]**

c) Explain Simulation driven design. **[4]**

OR

Q6) a) Write on make vs buy decision in product development with example. **[8]**

b) Write note on Additive manufacturing **[6]**

c) Differentiate Product testing and product validation. **[4]**

Q7) a) Write a short note on Design for robustness. **[8]**

b) Write a short note on Product data Management (PDM). **[6]**

c) Discuss the elements of PLM in detail. **[4]**

OR

Q8) a) Explain FMEA with example. **[8]**

b) Differentiate Value analysis and value engineering. **[6]**

c) Write a short note on Product lifecycle management (PLM)**.** **[4]**



Total No. of Questions : 8]

SEAT No. :

PB2369

[Total No. of Pages : 2

[6263]-219

B.E. (Mechanical Engineering)

EXPERIMENTAL METHODS IN THERMAL ENGINEERING

(2019 Pattern) (Semester-VII) (Elective-IV) (402045B)

Time : 2½ Hours] *[Max. Marks : 70*

Instructions to the candidates:

1) ***Solve all Q1 or Q2, Q3 or Q4, Q5 or Q6, Q7 or Q8.***
2) ***Neat diagrams must be drawn wherever necessary.***
3) ***Figures to the right indicate full marks.***
4) ***Assume suitable data, if necessary.***

Q1) a) What is an optical pyrometer? Explain with neat sketch its Construction, working & Its Applications. **[9]**

b) Explain working and characteristics of radiation pyrometer with neat sketch. **[8]**

OR

Q2) a) Write short notes on: **[8]**

i) Thermocouple

ii) Thermopile

b) What is thermistor? Describe the resistance characteristics of thermistors. Write the advantages and disadvantages. **[9]**

Q3) a) What is transducer? Explain the working of a piezoelectric transducer for pressure measurement with a neat sketch. **[9]**

b) Explain the following: **[9]**

i) Inductance-type pressure transducers

ii) Capacitance-type pressure transducers

OR

P.T.O.

Q4) a) State the four different pressure measurement. Explain working principal of Bourdon tube pressure gauge with neat sketch. **[9]**

b) Explain Pressure measurement in details **[9]**

i) McLeod gauge

ii) Ionization gauge

Q5) a) State the objectives of flow visualization. Explain Schlieren system with neat sketch. **[10]**

b) Explain the Principle of Laser Doppler Anemometer (LDA) with neat sketch. **[8]**

OR

Q6) a) Write short note on: **[10]**

i) Vortex-Shedding Flow meter

ii) Ultrasonic Flow meter.

b) Explain the flow obstruction methods? How to measure the flow in micro channel? **[8]**

Q7) a) What is the main purpose of Data Acquisition system (DSA)? Describe the Data Acquisition briefly? **[9]**

b) How to apply the AI & ML in mechanical measurement process? What is regression used for? **[8]**

OR

Q8) a) Describe data transmission with - A/D & D/A conversion - Data storage and Display. **[9]**

b) What is ANOVA in statistical analysis? What type of ML used for prediction of measurement parameter? **[8]**



Total No. of Questions : 8]

SEAT No. :

PB2370

[Total No. of Pages : 2

[6263]-220
B.E. (Mechanical Engineering)
ADDITIVE MANUFACTURING
(2019 Pattern) (Semester-VII) (Elective-IV) (402045C)

Time : 2½ Hours] *[Max. Marks : 70*

Instructions to the candidates:

1) ***Attempt Q1 or Q2, Q3 or Q4, Q5 or Q6, Q7 or Q8.***
2) ***Neat diagrams must be drawn wherever necessary.***
3) ***Figures to the right indicate full marks.***
4) ***Use of electronic pocket calculator is allowed.***
5) ***Assume suitable data if necessary.***

Q1) a) Explain the process of Polyjet Printing with suitable sketch. Also write merits, demerits and applications. **[9]**

b) Explain the process of Direct Metal Deposition (DMD) with suitable sketch. Also write merits, demerits and applications. **[9]**

OR

Q2) a) Explain Bio-printing with principle, construction and working with suitable sketch. **[9]**

b) Explain the process of Fused Deposition Modeling (FDM) with suitable sketch. Also write merits, demerits and applications**.** **[9]**

Q3) a) Explain varieties of heat treatment applied in pre- and post-processing of additive manufacturing based products. **[8]**

b) Explain types of material used in Additive Manufacturing. Also write merits, demerits and application. **[9]**

OR

Q4) a) Explain the materials used in 4D Printing with important process parameters, benefits, drawbacks, Limitations and appropriate applications. **[9]**

b) Explain use of Shape-Memory Alloys in Additive Manufacturing with important process parameters, benefits, drawbacks, Limitations and appropriate applications. **[8]**

P.T.O.

Q5) a) Explain Cold end and hot end of Extruders used in Polymer based 3D Printers. **[9]**

b) Explain the design considerations of Powder Bed Spreading Mechanisms also known as recoater system used in Metal based 3D Printers. **[9]**

OR

Q6) a) Explain function of gas circulation system, powder handling system and base plate in 3D printer**.** **[9]**

b) Explain the classification of Equipment Topology/Layout Frame Designs used in 3D Printers with illustrations. **[9]**

Q7) a) What is 4D Printing? Explain and illustrate its applications. **[8]**

b) Explain how additive manufacturing is used in Assistive Devices Sector. Also write merits, demerits and practical feasible applications with illustrations. **[9]**

OR

Q8) a) Explain how additive manufacturing is used in Bio-medical Applications. Also write merits, demerits and practical feasible applications with illustrations. **[9]**

b) What are the Bio-materials? Explain and illustrate their applications. **[8]**



Total No. of Questions : 8]

SEAT No. :

PB2371

[Total No. of Pages : 5

[6263]-221
B.E. (Mechanical)
OPERATION RESEARCH
(2019 Pattern) (Semester - VII) (Elective - IV) (402045D)

Time : 2½ Hours] *[Max. Marks : 70*

Instructions to the candidates:

1) ***Answer Q.1 or Q.2, Q.3 or Q.4, Q.5 ro Q.6 Q.7 ro Q.8.***
2) ***Answers in one answer books.***
3) ***Figures to the right indicate full marks.***
4) ***Assume suitable data, if necessary.***

Q1) a) Use simplex method to solve the following LPP. **[10]**

Maximize $Z = 2x_1 + x_2$

Subject to constraints

$$4x_1 + 3x_2 \leq 12;$$

$$4x_1 + x_2 \leq 8;$$

$$4x_1 - x_2 \leq 8;$$

$$x_1, x_2 \geq 0;$$

b) Discuss the following terms related to LPP. **[7]**

i) Objective function

ii) Constraint surface

iii) Feasible and infeasible points

iv) Optimum solution

OR

Q2) a) One kind of cake requires 200g of flour and 25g of fat, and another kind of cake requires 100g of flour and 50g of fat. Find the maximum number of cakes that can be made from 5 kg of flour and 1 kg of fat assuming that there is no shortage of the other ingredients, used in making the cakes. Formulate LPP and Use Graphical method to solve. **[10]**

b) Explain the limitation of LPP in solving Engineering problem. How this is used for the optimization. **[7]**

P.T.O.

Q3) a) Discuss the following related to the transportation model. **[8]**

i) Feasible solution

ii) Optimum solution

iii) Non-degenerate basic feasible solution

iv) Degenerate basic feasible solution

b) Find out the initial feasible solution by Vogel's Approximation Method (VAM). **[10]**

		Stores				Availability
		I	II	III	IV	
	A	21	16	15	13	11
Warehouse	B	17	18	14	23	13
	C	32	27	18	41	19
Requirement		6	10	12	15	

OR

Q4) a) In a construction site there are four cranes. Each crane must be allocated to one job. The time required to set up each crane for each job is shown in table. Find the best assignment of cranes to the jobs, so that the total time required for completing the job is minimized. **[12]**

		Job			
		I	II	III	IV
Crane	A	5	7	11	6
	B	8	5	9	6
	C	4	7	10	7
	D	10	4	8	3

b) Explain the significance and applications of assignment and transportation problem. **[6]**

Q5) a) A bank has decided to modernize its office. The major elements of the project are as follows.

Activity	Description	Predecessor Activity	Duration (Days)
A	Design New Premises	---	14
B	Obtain tenders from contractors	A	4
C	Select the contractor	B	2
D	Arrange details with selected contractor	C	1
E	Decide which equipment is to be used	A	2
F	Arrange storage of equipment	E	3
G	Arrange disposal of other equipment	E	2
H	Order new equipment	E	4
I	Take delivery of new equipment	H, L	3
J	Renovations take place	K	12
K	Remove old equipment for storage or disposal	D, F, G	4
L	Cleaning after the contractor finished	J	2
M	Return old equipment for storage	H, L	2

i) Draw an arrow diagram for this project

ii) Find out the critical path

iii) For each non-critical activity find out the total, free and independent float or Slacks. **[12]**

b) Explain in brief following (Any 3) : **[6]**

i) Gradual failure

ii) Sudden failure

iii) Progressive failure

iv) Retrogressive failure

v) Random failure

OR

Q6) a) A truck owner finds from his past records that the maintenance cost per year of a truck whose purchase price is Rs. 8,000 are as follows : **[10]**

Year	1	2	3	4	5	6	7	8
Maintenance Cost (Rs.)	1000	1300	1700	2000	2900	3800	4800	6000
Resale price (Rs.)	4000	2000	1200	600	500	400	400	400

Determine at which time it is profitable to replace the truck.

b) Differentiate between CPM and PERT and also discuss various floats involved in the in CPM analysis of network. **[8]**

Q7) a) A salesman located in a city A decided to travel to city B. He knew the distances of alternative routes from city A to city B. He then drew a highway network map as show in following figure. The city of origin A, is city 1. The destination city B is city 10. Other cities through which the salesman will have to pass through are numbered 2 to 9. The arrow representing routes between cities and distances in kilometers are located on each route. The salesman problem is to find the shortest route that covers all the selected cities from A to B. The time for each activity is given in the table. (Solve by using Dynamic programming). **[12]**

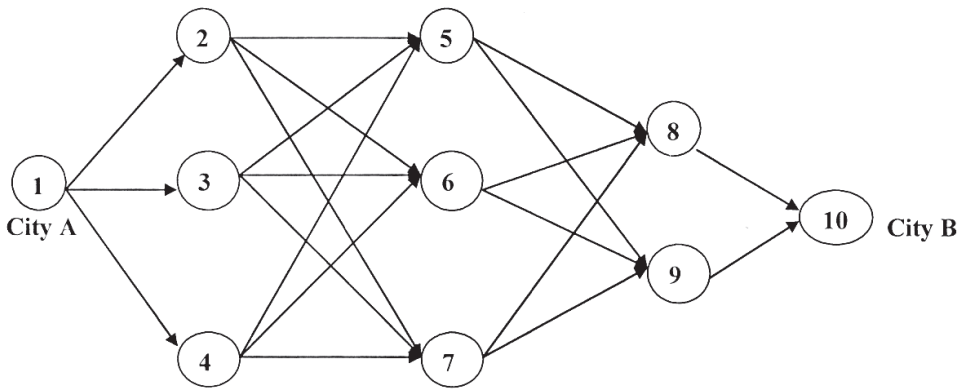

Activity	Duration	Activity	Duration
1-2	4	4-5	6
1-3	6	4-6	10
1-4	3	4-7	5
2-5	7	5-8	4
2-6	10	5-9	8
2-7	5	6-8	3
3-5	3	6-9	7
3-6	8	7-8	8
3-7	4	7-9	4
		8-10	7
		9-10	9

b) Explain in brief methodology of Monto Carlo Simulation. **[5]**

Q8) a) A company has five salesmen who have to be allocated to four marketing zones. The return (profit) from each zone depends upon the numbers of salesman working in that zone. The expected return for different numbers of salesman in different zones, as estimated from the past record, are given in the following table. Determine the optimum allocation policy. (Use Dynamic Programming). **[12]**

Number of Salesmen	Marketing Zones		
	Zone 1	Zone 2	Zone 3
0	30	35	42
1	45	45	54
2	60	52	60
3	70	64	70
4	79	72	82
5	90	82	95
6	98	93	102
7	105	98	110
8	100	100	110
9	90	100	110

b) Explain in brief methodology involved in the simulation. **[5]**



Total No. of Questions : 8]

SEAT No. :

PB2372

[Total No. of Pages : 2

[6263]-222

B.E. (Mechanical Engineering)

AUGMENTED REALITY AND VIRTUAL REALITY

(2019 Pattern) (Semester - VII) (Elective - IV) (402045E)

Time : 2½ Hours] *[Max. Marks : 70*

Instructions to the candidates:

1) ***Solve Q.1 or Q.2, Q.3 or Q.4, Q.5 or Q.6 Q.7 or Q.8.***
2) ***Neat diagrams must be drawn wherever necessary.***
3) ***Figures to the right indicate full marks.***
4) ***Use of electronic pocket calculator is allowed.***
5) ***Assume suitable data, if necessary.***

Q1) a) Explain and illustrate linear and non-linear angular rotation used in animation of objects. **[10]**

b) Explain and illustrate simple steerable wheel used in physical simulations. **[8]**

OR

Q2) a) Explain and illustrate the four system elements of typical immersive VR system. **[12]**

b) Explain Virtual lights. **[6]**

Q3) a) What are the similarities and differences between Augmented Reality (AR) with Virtual Reality (VR). **[12]**

b) Write a short note on Spatial displays and available technology in market. **[5]**

OR

Q4) a) Explain the five domains where and how Augmented Reality is used today. **[10]**

b) Explain Smart-Glasses and their types used in Augmented Reality (AR). **[7]**

P.T.O.

Q5) a) Explain human ear's features and characteristics useful to complement images of VEs with auditory cues for VR systems. **[8]**

b) Explain following features and characteristics of human's somatic senses: Somatic sensations, Pain, Tactile sensations, Proprioceptive senses.**[10]**

OR

Q6) a) Explain human ear's following features and characteristics: Sound, Sound perception, Frequency range, Sound intensity, Sound direction, The sound stage, Head-related transfer functions (HRTFs), Measuring HRTFs, Ambisonics. **[10]**

b) Describe and illustrate four types of head-coupled displays used in VR systems. **[8]**

Q7) a) Explain any one virtual reality application in entertainment domain. **[8]**

b) How to simulate the combined augmented and virtual reality application in training domain. **[9]**

OR

Q8) a) Explain any one augmented reality application in game development domain. **[9]**

b) Explain how VR can be subjected to Computational Fluid Dynamics (CFD) techniques to discover air or fluid flow around the object, and surface temperature profiles. **[8]**

Total No. of Questions : 8]

SEAT No. :

PB-2373

[Total No. of Pages : 2

[6263]-223
B.E. (Mechanical Engineering)
Computer Integrated Manufacturing
(Semester-VIII) (2019 Pattern) (402048)

Time : 2½ Hours] *[Max. Marks : 70*

Instructions to the candidates:

1) ***Solve Q.1 or Q.2, Q.3 or Q.4, Q.5 or Q.6, Q. 7 or Q.8***
2) ***Neat diagrams must be drawn wherever necessary.***
3) ***Figures to the right indicate full marks.***
4) ***Use of electronic pocket calculator is allowed.***
5) ***Assume suitable data, if necessary.***

Q1) a) Explain with neat sketch any three canned cycles with examples. **[9]**

b) Write a CNC turning program for following component shown in Figure 1b. Assume suitable data. **[9]**

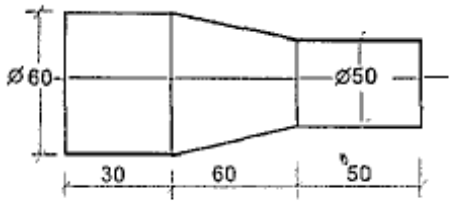

(All dimensions are in mm)

Fig. 1b

OR

Q2) a) Explain G00, G01, G02 code in part programming with suitable example. **[9]**

b) Write a complete part program for milling machine on a work piece shown in Figure 2b. Assume suitable speed and feed for machining. **[9]**

P.T.O.

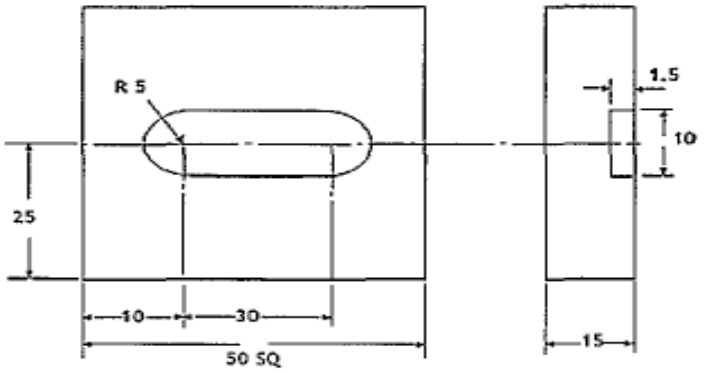

(All dimensions are in mm)

Fig. 2b

Q3) a) Explain Computer Aided Process Planning (CAPP) and its Benefits. **[9]**

b) Explain in brief **[8]**

i) Capacity planning,

ii) Enterprise Resource Planning (ERP).

OR

Q4) a) Describes the different approaches to Computer Aided Process Planning (CAPP). **[9]**

b) Describe the Manufacturing Resource Planning (MRP-II) with input, working, outputs and benefits. **[8]**

Q5) a) Explain cellular manufacturing and types of machine cell design with layouts. **[9]**

b) Describe Rank Order Clustering (ROC) algorithm with suitable example. **[9]**

OR

Q6) a) Explain Optiz parts coding system with suitable example. **[9]**

b) Explain any three Flexible Manufacturing Systems (FMS) based on layout with suitable sketches. **[9]**

Q7) a) State and explain key loT Applications in Manufacturing. **[9]**

b) Explain Big-Data and Cloud Computing used for loT along with its benefits and limitations. **[8]**

OR

Q8) a) Explain the use of loT for Smart Manufacturing, Predictive Maintenance and Supply-Chain & Logistics applications. **[9]**

b) Explain with an example, How Digital Twin is implemented for Smart Manufacturing? **[8]**

Total No. of Questions : 8]

SEAT No. :

PB2374

[Total No. of Pages : 3

[6263]-224
B.E. (Mechanical)
ENERGY ENGINEERING
(2019 Pattern) (Semester - VIII) (402049)

Time : 2½ Hours] ***[Max. Marks : 70***

Instructions to the candidates:

1) ***Answer Q.1 or Q.2, Q.3 or Q.4, Q.5 or Q.6, Q.7 or Q.8.***
2) ***Neat diagrams must be drawn wherever necessary.***
3) ***Figures to the right of each qsuestion indicate full marks.***
4) ***Assume suitable data, necessary wherever and mention the same clearly.***
5) ***Use of steam tables, Mollier chart and calculator is allowed.***

Q1) a) What are main functions of Spillways? Enlist the different types of spillways. Explain anyone type with simple diagram. **[6]**

b) Describe with simple diagram Plant Layout of Low Capacity Diesel Engine Power Plant. **[6]**

c) Discuss working of Gas Cooled Reactor with its diagram and advantages. **[6]**

OR

Q2) a) The run off data of one river at a particular site is as below. **[6]**

Sr. No.	Month	Discharge in millions of Cu m per month
1	J	80
2	F	40
3	M	50
4	A	0
5	M	20
6	J	100
7	J	150
8	A	250
9	S	200
10	O	120
11	N	80
12	D	100

From above data

i) Determine Mean Flow

ii) Draw Flow Duration Curve

b) Describe with simple diagram general layout of diesel power plant indicating all systems used. **[6]**

c) Discuss working of Boiling Water Reactor with its diagram and limitations. **[6]**

P.T.O.

Q3) a) The air enters the compressor of gas-turbine power plant at 1 bar, 27 degrees Celsius. The pressure ratio is 6:1. The air after compression is passed through heat exchanger with effectiveness 0.65. Then air is passed to combustion chamber and heated to 870 degrees Celsius Then gases are expanded up to 1 bar in turbine then to heat exchanger and finally to the exhauts. The isentropic efficiency of compressor, gas turbine is 80%, 85% respectively. Take adiabatic index for air gas as 1.4. Take specific heat for air, gas as 1 KJ/Kg-K. Neglect mass flow rate of fuel and air mass as 5 kg/sec. Draw cycle arrangement and T-s diagram and determine **[9]**

i) The thermal efficiency of cycle
ii) Heat carried away by exhaust gases on per minute basis

b) How Kalina (Cheng) Cycle works? Describe with cycle arrangement, advantages and disadvantages. **[8]**

OR

Q4) a) The air enters the compressor of 5 MW capacity gas-turbine power plant at 1 bar, 30 degrees Celsius. The maximum cycle temperature, pressure is 550 degrees Celsius, 5 bar respectively. The two stage expansion with reheating pressure of 2.24 bar is used in the plant. In the reheater gas is heated up to maximum cycle temperassor, The gases are expanded up to 1 bar in second turbine. The isentropic efficiency of compressor, both turbines is 80%, 85% respectively. Take adiabatic index for air gas as 1.4, 1.33 respectively. Take specific heat for air, gas as 1 KJ/Kg-K, 1.15 KJ/Kg-K respectively. Neglect mass flow rate of fuel. Draw cycle arrangement and T-s diagram and determine. **[9]**

i) The termal efficiency of cycle
ii) Mass flow rate of air

b) Define Tri-generation. Describe Tri-generation cycle with block diagram, advantages and applications. **[8]**

Q5) a) A power generation station with maximum demand as 30 MW having following annual data. Capacity factor = 0.4, Load factor = 0.5 and use factor = 05. **[6]**

Determine-

i) Annual energy produced
ii) Reserve capacity over and above peak load
iii) Number of hours during which plant is not working.

b) Why relays are used in power stations? Discuss working of any one relay with diagram. **[6]**

c) List out various methods of thermal energy storage. Describe anyone method with simple diagram. **[5]**

OR

Q6) a) Refer data for power supplied to consumer **[6]**

Time (hr)	0-6	6-10	10-12	12-16	16-20	20-22	22-24
Load(MW)	20	50	60	40	80	70	40

Determine

i) Plant load factor

ii) Load factor for stand by equipment of 20 MW capacity if it takes up all load above 60 MW.

b) State main functions of switch gear system. Describe working of anyone switch gear system with diagram. **[6]**

c) Describe methods of estimation of Energy demand. **[5]**

Q7) a) Explain the working principle of Solar Photovoltaic System. What are advantages and applications of the same? **[6]**

b) Discuss the working of flash steam geothermal energy system with diagram and advantages. **[6]**

c) Wirte note on:-Close type (Inert gas) MHD system. **[6]**

OR

Q8) a) Elaborate dolphin type wave machines with diagram and advanatages.**[6]**

b) Discuss the working of Anderson's Ocean Thermal Energy system with simple diagram and advantages. **[6]**

c) Write note on:- Biomass gasifier. **[6]**

Total No. of Questions : 8]

SEAT No. :

PB-2375

[Total No. of Pages : 3

[6263]-225

B.E. (Mechanical)

QUALITY AND RELIABILITY ENGINEERING

(2019 Pattern) (Semester - VIII) (402050A) (Elective - V)

Time : 2½ Hours] *[Max. Marks : 70*

Instructions to the candidates:

1) ***Draw suitable neat diagrams, whenever necessary.***
2) ***Figure to the right indicate full marks.***
3) ***Assume suitable data if required.***

Q1) a) Explain the term Probability density function (PDF) & Cumulative Distribution Function (CDF). **[8]**

b) Following table shows the results for 1000 components tested simultaneously, Evaluate: Hazard rate, failure density function & Reliability. **[10]**

Operating Time(Hrs)	0	100	200	300	400	500	600	700	800	900	1000
No. of Surviving Components	1000	895	810	730	660	600	545	495	450	410	373

OR

Q2) a) List and compare discrete and continuous probability distributions. **[9]**

b) Draw & explain a specimen “Bath Tub curve”. **[9]**

Q3) a) Explain Cold, Warm & Hot Stand by Redundancy. **[8]**

b) A system have three elements 1, 2 and 3 connected in series with their failure rates of $\lambda 1 = 0.005$, $\lambda 2 = 0.003$, $\lambda 3 = 0.001$ per hour respectively Assuming. mission time of 20 hours and system reliability of 0.95, find the reliability of each subsystem to achieve the desired reliability goal. **[9]**

P.T.O.

OR

Q4) a) Explain with illustration reliability analysis of series, parallel & mixed configuration systems. **[8]**

b) The four main units connected in series together make an assembly of machine The individual reliabilities of units are 0.70. 0.80, 0.90 respectively. If the reliability is to be increased to a value of 0.65. Explain and find how the reliability of machine should be apportioned among these units with minimum effort technique. **[9]**

Q5) a) Explain methods to determine minimal cut sets. **[9]**

b) A room with two light bulb is operated by a single switch Assuming No light in the room as the top undesirable event construct the fault tree diagram. **[9]**

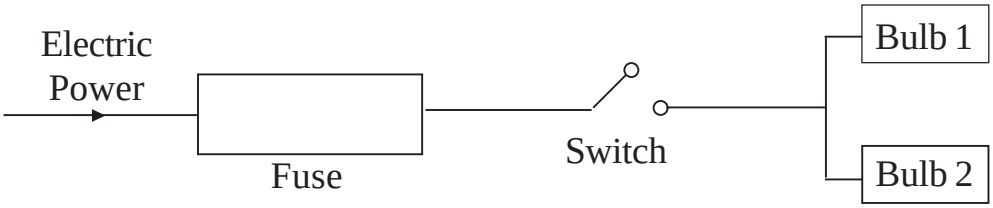

OR

Q6) a) State the basic concepts of FMEA and FMECA and explain in what way FMECA is different than FMEA. Also, state the basic analysis procedure for FMEA/FMECA. **[9]**

b) Explain Ishikawa diagram for Failure representation with suitable example. **[9]**

Q7) a) What is Maintainability function? Distinguish between Breakdown maintenance and Preventive Maintenance. **[9]**

b) Explain the term Margin of Safety & Factor of safety. **[8]**

OR

Q8) a) Defined availability and maintainability the data for a CNC machine in a plant is as follows. Mean time before failure: 35 Hours Mean time to repair: 10 Hours Administrative logistics Time: 50% of MTTR Calculate operational availability and inherent availability for CNC machine. **[8]**

b) Write a short note on any three. **[9]**

i) High Accelerated Life Testing (HALT)

ii) Mechanical Reliability

iii) Analysis of Failure Time

iv) Highly Accelerated Stress Screening (HASS).

⌘⌘⌘

Total No. of Questions : 8]

SEAT No. :

PB-2376

[Total No. of Pages : 3

[6263]-226

B.E. (Mechanical)

ENERGY AUDIT AND MANAGEMENT

(2019 Pattern) (Semester - VIII) (402050B) (Elective - V)

Time : 2½ Hours] *[Max. Marks : 70*

Instructions to the candidates:

1) ***Answer Q1 or Q2, Q3 or Q4, Q5 or Q6, Q7or Q8***
2) ***Figures to the right side indicate full marks.***
3) ***Use of Calculator is allowed.***
4) ***Assume Suitable data if necessary.***

Q1) a) Write a short note on: Net Present Value (NPV) **[5]**

b) Illustrate need of Financial analysis. **[5]**

c) Consider two projects, A & B with the initial investment Rs. 80,000. The project life times are 5 years in each case. The saving in each of the 5 years for the two projects is as shown in the following table **[7]**

	Project A	Project B
Capital Cost (Rs.)	Rs. 80,000	Rs.80,000
Year	Cash Flows (Rs.)	Cash Flows (Rs.)
01	10,000	50,000
02	20,000	40,000
03	30,000	30,000
04	40,000	20,000
05	50,000	10,000

Assuming discount rate 20%, find out the preferable project out of A & B.

OR

Q2) a) Explain Internal Rate of Return. What are advantages and disadvantages of IRR? **[6]**

b) Write short note on risk and Sensitivity Analysis. **[6]**

c) Write a short note on : **[5]**

i) Discounting ii) Depreciation

P.T.O.

Q3) a) Enlist and discuss energy saving methods in pumping system. **[8]**

b) A Cooling water pump is used for process cooling of a chemical plant. The data obtained during testing are: Power pump discharge 0.8 m^3/s, Power absorbed i.e. power input P = 650 KW, Suction Head hs = 1m, Delivery Head hd = 56m, Height of cooling tower = 5m, Efficiency of motor = 0.89, Density of water =997 kg/m^3. Determine the pump efficiency. **[10]**

OR

Q4) a) What are the measures to be taken for efficient operation of HVAC system? **[8]**

b) Find the furnace efficiency required to melt one ton of steel from ambient temp of 30°C. following data is given : **[10]**

i) Specific heat of steel = 0.682 kJ/kg/deg°C

ii) Latent heat of melting of steel = 272 kJ/kg

iii) Melting point of steel = 1650°C

iv) The melting furnace consumed 625 kWh to melt one ton of steel.

Q5) a) Explain the following terms: Power factor. Maximum demand, Copper losses, luminous losses, Stray losses. **[10]**

b) What are the factors affecting energy efficiency of electrical motors? **[8]**

OR

Q6) a) The connected loads for shop are as below : **[10]**

10 bulbs of 60 W each 08 fluorescent tubes of 50 W each. An old refrigerator of 300W. It is decided to replace the bulbs and tubes with 12CFL of 16W each and an old refrigerator by energy efficient refrigerator of 150W. Considering usages of 8 hours per day an electrical tariff of Rs. 5 per kwh. Calculate an annual electrical energy saving in kWh and cost.

b) What is various energy saving opportunities in illumination? **[8]**

Q7) a) What are benefits of waste heat recovery? Explain the concept of heat wheel. **[9]**

b) Write notes on : **[8]**

i) Heat Pipes

ii) Carbon credits.

OR

Q8) a) Explain CDM project with flowchart. **[8]**

b) What is the cogeneration? Describe technical option for cogeneration and write down advantages of cogeneration. **[9]**

⌘⌘⌘

Total No. of Questions : 8]

SEAT No. :

PB-2377

[Total No. of Pages : 2

[6263]-227

B.E. (Mechanical)

MANUFACTURING SYSTEMS AND SIMULATION (MS & S)

(2019 Pattern) (Semester - VIII) (402050C) (Elective - V)

Time : 2½ Hours] *[Max. Marks : 70*

Instructions to the candidates:

1) ***Answer Q1 or Q2, Q3 or Q4, Q5 or Q6, Q7 or Q8.***
2) ***Figure to the right indicate full marks.***
3) ***Draw suitable neat diagrams, whenever necessary.***
4) ***Assume suitable data if required.***

Q1) a) Discuss simulaion as a decision-making tool? **[9]**

b) Explain Agent-based model with neat diagram? **[8]**

OR

Q2) a) Explain Petri net Manufacturing Simulation with neat diagram? **[9]**

b) Explain Intelligent simulation using artificial intelligence (AI) techniques? **[8]**

Q3) a) What are the components of system in modelling and simulation? **[9]**

b) Explain following Input data in details : **[9]**

i) Deterministic input data,

ii) Probabilistic input data,

iii) Discrete input data,

iv) Continuous input data

OR

Q4) a) What are Different Sources of collecting input data? Explain in details? **[9]**

b) Explain phases of input modeling for simulation? **[9]**

P.T.O.

Q5) a) How to improve production efficiencies and reduce operating costs through simulation by using simulation software? **[9]**

b) Explain Validation Model Assumptions in details. **[8]**

OR

Q6) a) Explain possible validation techniques in order of increasing cost-to-value ratios. **[9]**

b) Explain Validation Model Assumptions in details. **[8]**

Q7) a) How Discrete event simulation are supporting production planning and scheduling decisions in digital factories? **[9]**

b) Explain discrete event simulation evaluation of distributed operating room scheduling. **[9]**

OR

Q8) a) How Material Handling Equipment's helps to improve manufacturing simulation? **[9]**

b) Explain role of robotics in Discrete Event Simulation. **[9]**

⌘⌘⌘

Total No. of Questions : 8]

SEAT No. :

PB-2378

[Total No. of Pages : 2

[6263]-228

B.E. (Mechanical)

ENGINEERING ECONOMICS AND FINANCIAL MANAGEMENT (Elective - V)

(2019 Pattern) (Semester - VIII) (402050D)

Time : 2½ Hours] *[Max. Marks : 70*

Instructions to the candidates :

1) ***Solve Q.1 or Q.2, Q.3 or Q.4, Q.5 or Q.6, Q.7 or Q.8.***
2) ***Figures to the right indicate full marks.***
3) ***Use of an electronic pocket Calculator is allowed.***
4) ***Assume suitable data, if necessary.***

Q1) a) What is the return on investment (ROI)? How to calculate it? **[8]**

b) What are the main features of the cash flow statement? Explain the treatment of foreign exchange losses while preparing the cash flow statement. **[10]**

OR

Q2) a) What steps are followed in preparation for the Profit and Loss Account and Balance Sheet from incomplete records? **[10]**

b) Differentiate cost accounting and management accounting. **[8]**

Q3) a) What is Tax planning and how it differs from financial planning? **[8]**

b) What is zero-base budgeting? State its advantages and disadvantages. **[9]**

OR

Q4) a) Explain incremental, activity and value proposition methods of budgeting. **[9]**

b) State the objectives of budgetary control. **[8]**

Q5) a) What is globalization and what factors influence globalization? **[9]**

b) Define international trade and reasons for international trade. **[8]**

OR

P.T.O.

Q6) a) What is Gresham's law and what are its limitations? **[9]**

b) What do you understand from barter and stock exchange, Explain in detail. **[8]**

Q7) a) Write a short note on : **[10]**

i) Accelerators

ii) Crowdfunding

iii) Venture Capitals

iv) Sensitivity Analysis

v) Harvesting-Exit Strategies

b) Explain the factors affecting investment decisions for startups. **[8]**

OR

Q8) a) What is a business valuation? Explain any three Valuation Methods. **[10]**

b) What are pre-money and post-money valuations? Describe in detail. **[8]**

▽▽▽▽

Total No. of Questions : 8]

SEAT No. :

PB-2379

[Total No. of Pages : 2

[6263]-229

B.E. (Mechanical)

ORGANIZATIONAL INFORMATICS

(2019 Pattern) (Semester - VIII) (402050E) (Elective - V)

Time : 2½ Hours] *[Max. Marks : 70*

Instructions to the candidates :

1) ***Answer Q.1 or Q.2, Q.3 or Q.4, Q.5 or Q.6, Q.7 or Q.8.***
2) ***Neat diagrams must be drawn wherever necessary.***
3) ***Figures to the right side indicate full marks.***
4) ***Assume suitable data, if necessary.***

Q1) a) Enlist PLM software and write features of it. **[9]**

b) Explain how to create a workflow diagram. **[9]**

OR

Q2) a) What are stages across Product life cycle? **[9]**

b) Write Note on following Product data issues. **[9]**

i) Access,

ii) Applications,

iii) Archiving

Q3) a) Explain evolution from MRP to MRP II to ERP. **[9]**

b) Explain the term **[8]**

i) Manufacturing Information System in lean manufacturing

ii) Industry 5.0. environment

OR

Q4) a) Distinguish between Business Engineering and Business Process Engineering. **[9]**

b) Write in detail approach of customization in ERP software. **[8]**

P.T.O.

Q5) a) What it meant by plant dashboard & its benefits? **[9]**

b) Explain following models in details for Manufacturing Execution System: **[8]**

i) Detailed production scheduling.

ii) Product definition management.

OR

Q6) a) Explain manufacturing execution system integration with ERP. **[9]**

b) What are advantages of ERP implementation? **[8]**

Q7) a) Explain the following business models with example. **[9]**

i) B2B

ii) EDI

iii) B2C

b) What is strategic enterprise management system? **[9]**

OR

Q8) a) Explain the term - Information requirement & system for SCM, CRM & SRM. **[9]**

b) Write down the role of Intranets and Extranets? **[9]**

▽▽▽▽

Total No. of Questions : 8]

SEAT No. :

PB-2380

[Total No. of Pages : 2

[6263]-230

B.E. (Mechanical Engineering)

COMPUTATIONAL MULTI-BODY DYNAMICS (Elective - V)

(2019 Pattern) (Semester - VIII) (402050F)

Time : 2½ Hours] *[Max. Marks : 70*

Instructions to the candidates :

1) ***Solve Q.1 or Q.2, Q.3 or Q.4, Q.5 or Q.6, Q.7 or Q.8.***
2) ***Neat diagrams must be drawn wherever necessary.***
3) ***Figures to the right indicate full marks.***
4) ***Use of an electronic pocket calculator is allowed.***
5) ***Assume suitable data, if necessary.***

Q1) a) Derive the Newton-Euler equation of motion for a rigid body in a multi-body system. **[9]**

b) State the principle of virtual work for dynamic equilibrium, thus derive an equation for an arbitrary particle. **[9]**

OR

Q2) a) Discuss the Holonomic and Nonholonomic constraints of a spatial rigid body. **[9]**

b) Explain and illustrate Lagrange's form of D' Alembert's principle. **[9]**

Q3) a) Discuss the kinematic equivalence of a revolute-revolute composite joint for a three-body system. **[9]**

b) Describe a Rigid Joint and explain it with a suitable example. **[8]**

OR

Q4) a) Determine the velocity constraints for a translational joint. **[9]**

b) What is the Inverse Dynamics of a multi-body system? Discuss Newton's method for the same. **[8]**

P.T.O.

Q5) a) Represent mathematically the screw motion of a body in space. **[9]**

b) Define the Euler angles and determine the transformation matrix using them. **[9]**

OR

Q6) a) Discuss the procedure to determine the reference frame to locate a body in space. **[9]**

b) What are open-chain and closed-chain kinematic systems? How are Equations of motion generated for open-chain and closed-chain constrained spatial systems? **[9]**

Q7) a) Determine the reaction force in a joint using Newton's third law. **[9]**

b) What are the domain-specific applications of Kinematic and Multi-body Dynamics Simulation software? **[8]**

OR

Q8) a) Enlist different external forces acting on a body in space, thus elaborating on any one in detail. **[8]**

b) Discuss the effect of Coulomb friction in the reaction forces of a multi-body system. **[9]**

▽▽▽▽

Total No. of Questions : 8]

SEAT No. : ____

PB2381

[Total No. of Pages : 2

[6263]-231

B.E. (Mechanical Engineering)

PROCESS EQUIPMENT DESIGN

(2019 Pattern) (Semester - VIII) (Elective - VI) (402051A)

Time : 2½ Hours] ***[Max. Marks : 70***

Instructions to the candidates:

1) ***Solve Q.1 or Q.2, Q.3 or Q.4, Q.5 or Q.6, Q.7 or Q8.***
2) ***Neat diagrams must be drawn wherever necessary.***
3) ***Figures to the right indicate full marks.***
4) ***Use of electronic pocket calculator is allowed.***
5) ***Assume suitable data, if necessary.***

Q1) a) Explain design of thick cylinders subjected to internal pressure based on maximum principal strain theory and derive equation to find thickness of cylinder wall. **[9]**

b) Explain the purpose of pre-stressing of cylinders. Explain autofrettage in detail with neat labeled sketch. **[9]**

OR

Q2) a) A long thick steel tube of inner diameter 150 mm is subjected to an internal pressure of 20 N/mm^2. The allowable compressive and tensile stresses for the tube are 160 N/mm^2 and 100 N/mm^2 respectively. Determine the outer diameter of the tube using: **[10]**

i) Maximum principal stress theory

ii) Maximum shear stress theory

Derive the expression you use.

b) What are different types of supports used in horizontal and vertical pressure vessels? Explain bracket support with neat labeled sketch. **[8]**

Q3) a) Explain the three types of floating roofs used in floating roof type tank with sketches. **[9]**

b) Explain the pump selection procedure for pump used in process industry. **[8]**

OR

P.T.O.

Q4) a) Explain shell and tube type of heat exchanger with neat labeled sketch. **[8]**

b) List the different types of valves used on pipe line. Explain any two types of valves with neat sketch. **[9]**

Q5) a) List the different pressure measuring instruments and explain principal, construction and working of Bourdon tube with neat labeled sketch. **[9]**

b) Discuss with neat labeled sketch, any type of flow meter used to measure flow of highly corrosive liquids involving measurement of erosive slurries.**[9]**

OR

Q6) a) Explain function of controller. **[4]**

b) State variables of Automatic Process control. **[6]**

c) Describe with neat sketches, Principal, construction and working of LVDT.**[8]**

Q7) a) What is purpose of using protective coating on metal? Write note on Metallic coating and inorganic coating. **[8]**

b) List NDT methods used for surface defects. Discuss any two methods used for detection of surface defects. **[9]**

OR

Q8) a) Explain how AI/IOT can be used to overcome challenges at Fuel Pumping station. **[8]**

b) Differentiate between Destructive and Non-destructive Testing. Explain Radiographic testing used for detection of internal defects. **[9]**



Total No. of Questions : 8]

SEAT No. :

PB2382

[Total No. of Pages : 3

[6263]-232

B.E. (Mechanical Engineering)

RENEWABLE ENERGY TECHNOLOGIES

(2019 Pattern) (Semester - VIII) (Elective - VI) (402051B)

Time : 2½ Hours] *[Max. Marks : 70*

Instructions to the candidates:

1) ***Solve Q.1 or Q.2, Q.3 or Q.4, Q.5 or Q.6, Q.7 or Q8.***
2) ***Neat diagrams must be drawn wherever necessary.***
3) ***Figures to the right indicate full marks.***
4) ***Use of electronic pocket calculator is allowed.***
5) ***Assume suitable data, if necessary.***

Q1) a) Describe the principle of solar photovoltaic energy conversion. How does the variation of insolation and temperature affect the I-V characteristics of a solar cell? **[6]**

b) Describe the classification of solar cells based on the type of active material used. **[6]**

c) Explain various factors contributing to losses and efficiency reduction in a solar cell. **[6]**

OR

Q2) a) State the principle of solar photovoltaic (PV) energy conversion and the applications of solar PV systems. **[8]**

b) Design a standalone PV system for the load specified in the table. **[10]**

Load	Number	Power Rating (Watt)	Usage Hr/day
LED lamp	1	40	12
Refrigerator	1	80	8
Computer	1	60	6

P.T.O.

Find:

i) Energy supplied (Wh) by the battery to inverter input considering inverter efficiency = 80 %.

ii) Considering Depth of Discharge (DOD) of 50 %, calculate the required charge capacity of battery (24V).

iii) Considering three days of autonomy, calculate battery charge capacity.

iv) Calculate no. of batteries needed for 24 V system voltage if the available battery configuration is 12 V and 100 Ah.

v) Calculate the number of panels of 40 W_p for the above case considering 8 sunshine hours of 1000 W/m^2 -day.

Assume battery efficiency = 80 %, Assume controller circuit efficiency = 100%.

Q3) a) Explain the principle of aerodynamic lift and also explain the various forces acting on aerofoil shape blade of wind turbine. **[6]**

b) Compare vertical axis wind turbine with horizontal axis turbine. **[6]**

c) List and briefly explain the various parts of horizontal axis wind turbine. **[6]**

OR

Q4) a) Explain how the wind energy systems (WECS) are classified? Discuss in brief? **[8]**

b) A propeller type wind turbine having blade diameter of 60 m is in operation at a speed of 175 rpm with a wind velocity of 25m/s. Calculate the total power density in the wind, maximum obtainable power density, total power produced with an efficiency of 30%, torque and axial thrust. Assume air density as $\rho = 1.226\ kg/m^3$. **[10]**

Q5) a) Describe the working principle of grid connected SPV system with battery storage. **[6]**

b) How do you calculate annual energy yield of wind power plant? **[6]**

c) Comment on the environmental impact of wind energy. **[5]**

OR

Q6) a) Explain **[6]**

i) speed control strategies for wind turbines; and

ii) power-speed characteristics of wind turbine for different wind speed.

b) What are the determinant factors in site selection for photovoltaic projects? **[6]**

c) What is the effect of solidity on the performance of wind turbine? **[5]**

Q7) a) Compare the relative performance of a floating drum and fixed one type biogas plants? **[6]**

b) Give the advantages and disadvantages of biomass energy. **[6]**

c) What are the different biomass energy resources and what is the energy yield from each of them. **[5]**

OR

Q8) a) What is gasification? Explain the processes **[6]**

i) Drying

ii) Pyrolysis

iii) Oxidation

b) What are thermo chemical and biochemical conversions? **[5]**

c) A biomass gasifier is used to run a compression ignition engine. The engine operates in the dual fuel mode with 76 % diesel replacement. The biomass feeding rate for the gasifier is 320 kg/hr. Calculate the power produced by the engine, if the engine efficiency is 45 % and calorific value of biomass is 16800 kJ/kg. Consider efficiency of the gasifier is 0.65. **[6]**



Total No. of Questions : 8]

SEAT No. : ____

PB2383

[Total No. of Pages : 2

[6263]-233

B.E. (Mechanical Engineering)

AUTOMATION AND ROBOTICS

(2019 Pattern) (Semester - VIII) (Elective - VI) (402051C)

Time : 2½ Hours] ***[Max. Marks : 70***

Instructions to the candidates:

1) ***Solve Q.1 or Q.2, Q.3 or Q.4, Q.5 or Q.6, Q.7 or Q8.***
2) ***Neat diagrams must be drawn wherever necessary.***
3) ***Figures to the right indicate full marks.***
4) ***Use of electronic pocket calculator is allowed.***
5) ***Assume suitable data, if necessary.***

Q1) a) Explain the various drive system used in an industrial robot with their selection criteria and compare their features, merits and demerits. **[9]**

b) Compare and illustrate salient features, applications and limitations of Planetary, Harmonic and Cycloidal Gearbox. **[9]**

OR

Q2) a) What are the factors which must be considered while choosing the drive system for robots? **[8]**

b) Explain in brief : **[10]**

i) DC Servomotors

ii) Stepper motors

iii) AC servo motors

iv) Brushless DC motors (BLDC)

Q3) a) What are the Grippers? Explain their Types, Classification, Significance and Applications used in Robotics. **[9]**

b) Describe the Construction, Working, Selection and Design Considerations of Switches used in various Robotic Applications? **[8]**

OR

P.T.O.

Q4) a) What are the Toolings? Explain their Types, Classification, Significance and Applications used in Robotics. **[9]**

b) Describe the Construction, Working, Selection and Design Considerations of Position and Force Sensors and Transduces used in various Robotic Applications? **[8]**

Q5) a) Define and Illustrate the joint coordinates of a robot. **[9]**

b) Explain and illustrate Newtonian and Eularian approach for formulation of equations of motion of planar two link/joint manipulator applicable to Robotics. **[9]**

OR

Q6) a) Compare and illustrate Lagrangian-Eulerian and Newtonian-Eularian Approaches for formulation of equations of motion of planar two link/joint manipulator applicable to Robotics. **[9]**

b) Compare, explain and illustrate Direct and Inverse Dynamics applicable to Robotics along with its applications. **[9]**

Q7) a) Write a note on "Robot Performance and Economics." **[8]**

b) Explain Motion Programming, Simulation and Off-line Programming. **[9]**

OR

Q8) a) Explain the concept of Unmanned Aerial Vehicle (UAV) and Autonomous Underwater Vehicles (AUV). **[9]**

b) Write a note on **[8]**

i) Humanoid Robots

ii) Robotic Assistive Technologies for Rehabilitation of Humans

x x x

Total No. of Questions : 8]

SEAT No. :

PB2384

[Total No. of Pages : 2

[6263]-234

B.E. (Mechanical Engineering)

INDUSTRIAL PSYCHOLOGY AND ORGANIZATIONAL BEHAVIOR

(2019 Pattern) (Semester - VIII) (Elective - VI) (402051D)

Time : 2½ Hours] ***[Max. Marks : 70***

Instructions to the candidates:

1) ***All questions are compulsory.***
2) ***Solve Q.1 or Q.2, Q.3 or Q.4, Q.5 or Q.6, Q.7 or Q8.***
3) ***Neat diagrams must be drawn wherever necessary.***
4) ***Figures to the right indicate full marks.***

Q1) a) What is Performance Development? Explain the methods of Performance Management? **[8]**

b) What is Leadership? Identify different Leadership styles. Explain any one. **[9]**

OR

Q2) a) What are different factors affects job satisfaction? Explain any one theory of motivation? **[8]**

b) Write short notes on **[9]**

i) Recruitment

ii) Time Management

iii) Stress Management

Q3) a) Explain the Concept of Organization? What is the Human Relations Theory of Organization? **[9]**

b) What is Organizational Behavior and explain any one model of Organizational Behavior? **[9]**

OR

P.T.O.

Q4) a) Describe a Social System. Discuss the elements of a Social System on which the whole Social System works? **[9]**

b) Write short notes on **[9]**

i) Classical Theory

ii) Human Relation Theory

iii) Contingency Theory

Q5) a) What are the different classification of Groups? What are the stages in the Group Development? **[8]**

b) What are the key factors that affect Teamwork? Discuss how the Teamwork affects Organizational Culture. **[9]**

OR

Q6) a) Explain the concept of Interpersonal Relationships also discuss the different ways in development of Interpersonal Relationships? **[8]**

b) Explain the term Conflict? What are the different types of Causes of Conflict? Explain the different types of ways of Conflict management? **[9]**

Q7) a) Explain the Concept of Organization Culture? What is the Dominant and Motivating Culture? **[9]**

b) Discuss the causes and forces on Organizational Change and Resistance of Change? **[9]**

OR

Q8) a) Explain in detail, the concept of Organizational Development with the common processes? Explain the models of Organizational change? **[9]**

b) Write short notes on **[9]**

i) Classical Organizational Theory

ii) Humanistic Theory

iii) Open System Theory

x x x

Total No. of Questions : 8]

SEAT No. : [ ]

PB2385

[Total No. of Pages : 2

[6263]-235

B.E. (Mechanical Engineering)

ELECTRIC AND HYBRID VEHICLE

(2019 Pattern) (Semester - VIII) (402051E) (Elective - VI)

Time : 2½ Hours] ***[Max. Marks : 70***

Instructions to the candidates:

1) ***Solve Q.1 or Q.2, Q.3 or Q.4, Q.5 or Q.6, Q.7 or Q.8.***
2) ***Neat diagrams must be drawn wherever necessary.***
3) ***Figures to the right indicate full marks.***
4) ***Use of electronic pocket calculator is allowed.***
5) ***Assume suitable data, if necessary.***

Q1) a) Describe and illustrate the BCU, their types. **[9]**

b) Explain and estimate the Battery Performance Parameters. **[9]**

OR

Q2) a) Describe and Illustrate the Motors (Prime Mover) Classification, Construction, Working, and Control. **[9]**

b) Explain Battery thermal management system in detail. **[9]**

Q3) a) Describe and illustrate various electric drive-train topologies and their types for Three - Wheeler application. **[9]**

b) Explain the Power train Components and Sizing Calculation. **[8]**

OR

Q4) a) Describe and Illustrate the Dynamic equation related to mechanics of vehicle movement. **[9]**

b) Differentiate between Mechanical Differential and Electric Differential. **[8]**

P.T.O.

Q5) a) Describe and illustrate the Driving dynamics and Comfort as well as the Anatomy and Terminology of Car Package. **[9]**

b) Describe and illustrate the Front/Rear Suspension Systems Design for varieties of Electric Vehicle Configuration. **[9]**

OR

Q6) a) Describe and Illustrate the Electrical vehicle design and packaging along with Hip Point/Seating Reference Point. **[9]**

b) What is Retrofitting? Describe and illustrate the retrofitting of Two-wheeler vehicles. **[9]**

Q7) a) Explain the Level 1, Level 2, and Level 3 chargers of electric vehicles. **[9]**

b) What are the Requirements for Charging System? **[8]**

OR

Q8) a) Write a note on **[9]**

i) AIS Charging Standards,

ii) BIS Charging Standards,

iii) Charging Infrastructure for Electric Vehicles -EVCI Guidelines

b) Describe and illustrate Hazard/Safety Management of Batteries during/after operations. **[8]**

x x x

Total No. of Questions : 8]

SEAT No. :

PB-2386

[Total No. of Pages : 2

[6263]-236

B.E. (Mechanical Sandwich)

ENERGY ENGINEERING AND MANAGEMENT

(Self-study - III)

(2019 Pattern) (Semester - VII) (402064)

Time : 2½ Hours] *[Max. Marks : 70*

Instructions to the candidates:

1) ***Answer Q1 Or Q2, Q3 Or Q4, Q5 Or Q6 & Q7 Or Q8.***
2) ***Neat diagrams must be drawn wherever necessary.***
3) ***Figures to the right side indicate full marks.***
4) ***Use of calculator is allowed.***
5) ***Assume suitable data, if necessary.***

Q1) a) Explain the working principle of an OTEC plant. **[8]**

b) What are the advantages and disadvantages of concentrating collectors over flat- plate collections? **[9]**

OR

Q2) a) With a neat sketch explain a typical geothermal field. **[8]**

b) Explain the working principle of a photovoltaic cell. **[9]**

Q3) a) List all the requirements of energy action planning? **[9]**

b) Write definition, objective and principles of energy management. **[9]**

OR

Q4) a) What are the principles of energy management and need of managerial skills in energy management? **[9]**

b) Discuss different aspects of Energy Policy and strategy in Energy conservation systems. **[9]**

P.T.O.

Q5) a) Explain different instruments used for energy audit with their applications. **[8]**

b) What are the different types of energy audit? Discuss the scope of preliminary energy audit. **[9]**

OR

Q6) a) Which information is to be collected during detailed energy audit? **[8]**

b) Write short notes on Current energy conservation act and electricity act. **[9]**

Q7) a) Define the diversity factor and state the advantages of the diversity of load in a power supply system. Show that the load factor of the power is improved by an increase in diversity of load. **[9]**

b) What is the significance of two part tariff and three part tariff? Explain the advantages of each over other. **[9]**

OR

Q8) a) Differentiate plant capacity factor and plant use factor. **[9]**

b) Write short notes on types of tariffs for electrical energy. **[9]**

Total No. of Questions : 8]

SEAT No. :

PB2387

[Total No. of Pages : 2

[6263]-237

B.E. (Mechanical Sandwich)

INDUSTRIAL ENGINEERING AND ORGANIZATIONAL MANAGEMENT (SELF-STUDY - IV)

(2019 Pattern) (Semester - VII) (402065)

Time : 2½ Hours] *[Max. Marks : 70*

Instructions to the candidates:

1) ***Answer Q.1 or Q.2, Q.3 or Q.4, Q.5 ro Q.6, Q.7 ro Q.8.***
2) ***Neat diagrams must be drawn wherever necessary.***
3) ***Figures to the right indicate full marks.***
4) ***Assume suitable data, wherever necessary.***

Q1) a) What are the factors considered for production facility design? **[4]**

b) What are the principles of plant layout? Explain with types and factors affecting layout? **[8]**

c) What are the analytical tools of plant layout? Explain with neat sketch layout of manufacturing shop floor. **[8]**

OR

Q2) a) Define and explain dynamic plant layout. **[4]**

b) Explain objectives and benefits of material handling. **[8]**

c) What are Quantitative methods of plant layout and relationship diagrams? **[8]**

Q3) a) Explain methods of production with their characteristics. **[8]**

b) Explain functions and objectives of production planning and control. **[8]**

OR

Q4) a) What is Inventory control? Explain deterministic and Probabilistic Inventory Models? **[8]**

b) Define and explain material requirement planning (MRP-I), Manufacturing resource planning (MRP-II)? **[8]**

P.T.O.

Q5) a) Role of product engineering department in process planning? Explain phases of process planning? **[8]**

b) Explain advantages and methods of assembly Line balancing. **[8]**

OR

Q6) a) What is group technology? Explain with advantages, disadvantages and applications? **[8]**

b) What is Network Analysis? Explain PERT and CPM with its important features? **[8]**

Q7) a) What is ergonomics? Explain with principals and human factors involved in it? **[10]**

b) Define and explain Rapid Upper Limb Assessment (RULA) and Rapid Entire Body Assessment (REBA)? **[8]**

OR

Q8) a) Explain objective, methods and procedure of job evaluation with suitable example? **[10]**

b) What is performance appraisal? Explain the role of Key Result Areas in it? **[8]**

Total No. of Questions : 8]

SEAT No. :

PB-2388

[Total No. of Pages : 5

[6263]-238

B.E. (Mechanical Sandwich)

DESIGN OF TRANSMISSION ELEMENTS

(2019 Pattern) (Semester - VIII) (402066)

Time : 3 Hours] *[Max. Marks : 70*

Instructions to the candidates:

1) ***Answer Q1 Or Q2, Q3 Or Q4, Q5 Or Q6 & Q7 Or Q8.***
2) ***Answers in One answer Books.***
3) ***Figures to the right indicate full marks.***
4) ***Assume suitable data, if necessary.***

Q1) a) Explain the following : **[6]**

i) Load - life relationship equation.

ii) Equivalent dynamic load

iii) Bearing life

b) The overhang counter shaft shown in following figure is supported at A and B by two single row deep groove ball bearing. The shaft diameter at A and B are 17 mm and 35 mm respectively. The shaft receives 7.5 KW power at 1000 r.p.m. through a flat belt pulley "**P**" and transmits power to the machine through spur gear "**G**". The load factor is 1.5 . If the expected rating life of bearing is 40,000 hrs. **Select** the bearings from manufacturing's catalogue using the following data :

- Diameter of pulley P = 250mm
- Pitch circle diameter of spur gear G = 150 mmRatio of belt tension = 2
- Angle of lap for belt = 180 degree
- Weight of pulley P = 150 N
- Weight of spur gear G = 100 N Gear pressure angle = 20 Degree

P.T.O.

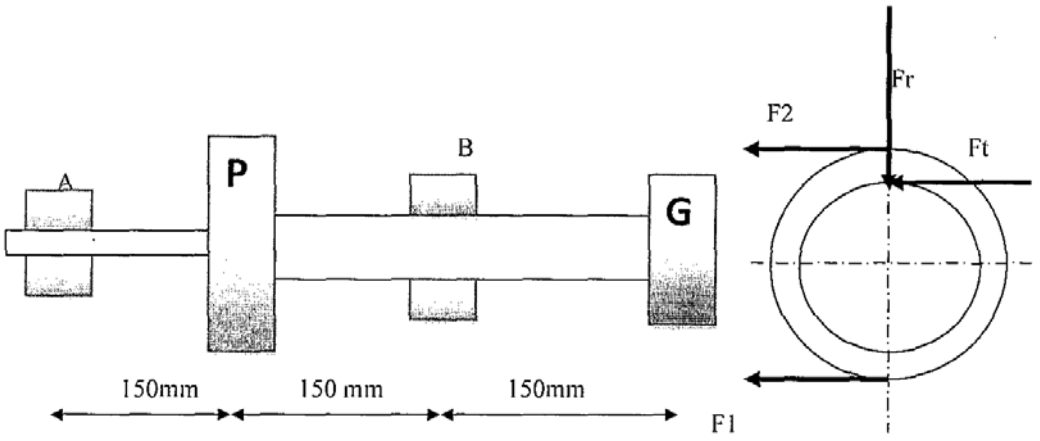

Use following data

Bearing number	6003	6203	6303	6403	6007	6207	6307	6407
Dynamic capacity 'C' KN	6.05	9.56	13.50	22.90	15.9	25.50	33.20	55.3

[12]

OR

Q2) a) A single row deep grove ball bearing is used to support the Lay shaft of a four speed automobile gearbox. It is subjected to loads in respective speed ratios as shown in table. The shaft is fixed to the engine shaft and rotates at 1750 rpm. The static and dynamic load carrying capacities of the bearing is expected to 11600N and 17600N respectively. The bearing is expected to be in use for 4000 hrs of operation. Find out the reliability with which the life could be expected.

Gear	Axial Load (N)	Radial Load (N)	% time engaged
First gear	3250	4000	1%
Second gear	500	2750	3%
Third gear	50	2750	21%
Fourth gear	Nil	Nil	75%

[12]

b) Explain with the help of curve McKee's investigation to correlate between bearing characteristic number and coefficient of friction. **[6]**

Q3) a) A Single block brake with a braking torque capacity of 225 N-m is shown in following figure. The brake drum rotates at 500 rpm and coefficient of friction between the brake drum and the block is 0.5 N/mm^2. Calculate

i) The actuating force and the hinge -pin reaction for clockwise rotation of the drum.

ii) The actuating force and the hinge - pin reaction for anti-clockwise rotation of the drum

iii) The dimensions of the block.

iv) The dimension "C" required for the brake to be self locking and

v) The rate of heat generation at the beginning of braking.

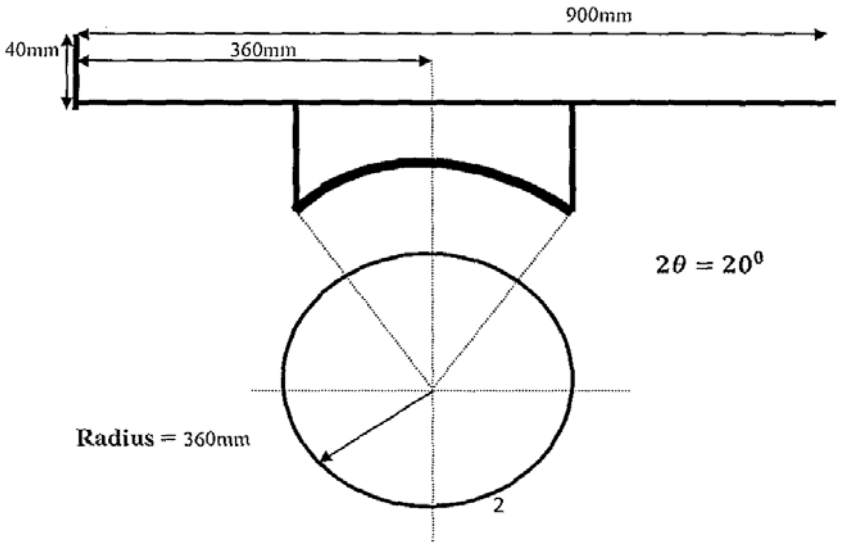

[12]

b) Explain with the help of neat sketch construction and working of internal expanding brakes. **[5]**

OR

Q4) a) Write down the expression for mean friction radius using uniform pressure and uniform wear theory. Plot the ratio of friction radius to outer radius (r_f / r_o) versus the ratio of inner radius to outer radius (r_i / r_o) for uniform pressure and uniform wear theories. **[5]**

b) A multi plate clutch has three driving plates and two driven plates. The outer diameter and inner diameter of the friction lining are 240 mm and 120 mm respectively. The coefficient of friction between the contacting surfaces is 0.28. Assume uniform pressure condition, find the total spring force pressing the plates together to transmit 30 KW power at 1500 rpm. If there are six springs each having stiffness of 15 N/mm, find out the power that can be transmitted, if each pair of contacting surface has worn away by 1.2 mm. Assume uniform wear condition. **[12]**

Q5) a) A multi speed gear box is to be designed for a small-size, general purpose machine tool for nine spindle speeds varying between 30 r.p.m. minimum and 1000 r.p.m. maximum speeds. The motor speed is 720 rpm. : Calculate the following

i) Range ratio & Geometric progression

ii) Various spindle speeds

iii) Number of Stages

iv) Possible structure formulae and Draw the speed diagrams a for a machine tool gear box ; and

v) Draw kinematic (Gearing) diagram for a given gear box.

vi) Diameters of pulley belts

The standard pulley diameters are 80, 90, 100, 112, 125, 140, 160, 180, 200, 224, 250, 280, 290, 300, 310, 355, 375, 400, 450, 500mm **[12]**

b) Explain in brief the condition of an optimum structure diagram should satisfy. **[6]**

OR

Q6) a) Draw speed ray diagram, layout for six speed gear box and calculate Input shaft speed for a multi speed gear box having any one of the following structural formula :

i) 2 (3) 3 (1)

ii) 2 (1) 3 (2)

The output speeds are 160 r.p.m. minimum and 100 r.p.m. maximum speeds. The motor shaft speed is 1440 r.p.m. **[12]**

b) Draw the following candidate structural diagram : **[6]**

i) 2(1) 3(2) 2(6)

ii) 2(6) 3(1) 2(3)

iii) 2(2) 3(4) 2(1)

Q7) a) Discuss the general design consideration in the selection of following components in hybrid electric vehicle **[10]**

i) Electric motor

ii) Battery pack

b) Discuss the modes of operation in hybrid electric vehicle. **[7]**

OR

Q8) a) Write short note on : **[10]**

i) Series hybrid vehicle

ii) Parallel hybrid vehicle

iii) Split type hybrid vehicle

iv) Power split device

b) Explain with the help of neat sketch : **[7]**

i) Basic elements and working of Series hybrid vehicle

ii) Basic elements and working of Parallel hybrid vehicle

Total No. of Questions : 8]

SEAT No. :

PB2389

[Total No. of Pages :3

[6263]-239
B.E. (Mechanical - Sandwich)
MACHINE DYNAMICS AND VIBRATION
(2019 Pattern) (Semester-VIII) (402067)

Time : 2½ Hours] *[Max. Marks : 70*

Instructions to the candidates:

1) ***Answer Q.1 or Q.2, Q.3 or Q.4, Q.5 or Q.6 and Q.7 or Q.8.***
2) ***Draw Neat diagrams wherever necessary.***
3) ***Use of Scientific calculator is allowed.***
4) ***Assume suitable data, wherever necessary.***
5) ***Figures to the right indicate full marks.***

Q1) a) Define following terms in relation to the damping in vibratory systems- **[6]**

i) Damping coefficient

ii) Critical damping coefficient

iii) Damping factor

b) A rod of uniform circular cross section having diameter 60mm and length 100 cm is fixed at one end and oriented with axis in vertical direction. A disc of mass 420 kg and radius of gyration 220 mm is coaxially attached at the other end of the rod. Take modulus of elasticity and rigidity as 220 GPa and 80 GPa respectively. Find the natural frequencies of axial (longitudinal), transverse (lateral) and torsional vibrations in Hz. **[11]**

OR

Q2) a) Draw the neat labeled time-displacement graph for free vibration of coulomb damped 1-dof system. Also state the expression for determing the loss of amplitude per cycle. **[6]**

b) A single-dof vibrating system is defined by the following parameters: m = 10 kg, k = 1000 N/m, C = 50 N-s/m. Determine:

i) Damping factor

ii) Natural frequency of damped vibration

iii) Logarithmic decrement

iv) Ratio of two consecutive amplitudes and

v) Number of cycles after which the original amplitude is reduced to 20 percent. **[11]**

P.T.O.

Q3) a) Explain with neat sketch the transient state and steady state of vibration related to forced vibration. **[6]**

b) An electric motor of mass 60 kg produces a static deflection of 30 mm when it is supported on isolation mounts. The motor has rotating unbalance of 54 kg-mm. At a speed of 1300 rpm the motor vibrates in vertical direction with steady state amplitude of 2 mm. Calculate stiffness and damping coefficient of the mount. **[11]**

OR

Q4) a) What are frequency response curves? State any four observations from these plots drawn for different dmping conditions. **[6]**

b) A rotor of 15 kg mass is mounted midway on a horizontal shaft of diameter 2.5 cm which is simply supported with a span of 1.3 m in bearings at both the ends. The center of gravity of the rotor is 0.4 mm offset from its axis of rotation. The modulus of elasticity of shaft material is 220 GPa. Determine- **[11]**

i) Static deflection of rotor

ii) Critical speed of shaft in rpm

iii) Amplitude of steady state lateral vibrations of rotor and

iv) Dynamic load on each bearing at a speed of 3000 rpm.

Q5) a) Explain two degree of freedom system with any two practical examples. **[6]**

b) Two discs A and B of mass MI $J_A = 2\text{kg-m}^2$ and $J_B = 3\text{kg-m}^2$ are mounted on a shaft of torsional stiffness K_t = 100 N-m/rad asa shown in the figure. The shaft can freely rotate in the end support bearings. **[12]**

i) Draw FBD of each disc and derive the differential equations of motion in terms of angular displacement θ_A and θ_B of the discs

ii) Derive the frequency equation and find natural frequencies of the rotor

iii) Find the mode shapes corresponding to each natural frequency and

iv) Describe mode shapes graphically.

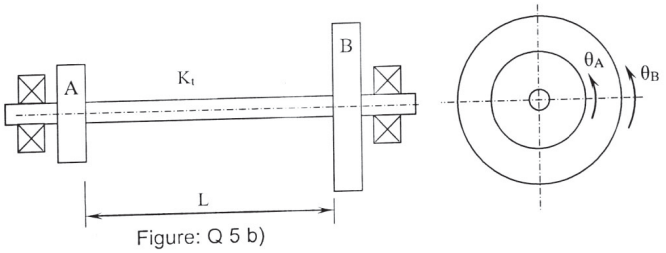

Figure: Q 5 b)

OR

Q6) a) Explain the significance of natural frequency and mode shape of a two degree of freedom system with suitable example. **[4]**

b) For the system of spring and masses shown in the figure. **[14]**

i) Derive the differential equations of motion in terms of displacement x_1 and x_2 of masses

ii) Derive the frequency equation and find natural frequencies

iii) Find the mode shapes corresponding to each natural frequency and

iv) Describe the mode shapes graphically.

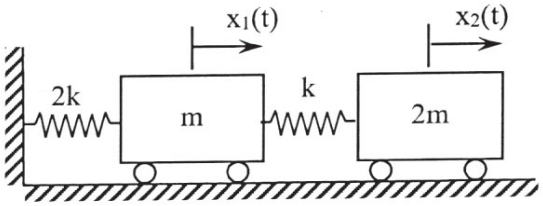

Figure: Q 5 b)

Q7) a) What are vibration exciters? Explain the types of mechanical vibration exciters. **[6]**

b) Explain with neat sketches the working principle of seismic sensor for vibration measurement. **[6]**

c) The static deflection of the vibrometer mass is 30 mm. The instrument when attached to machine vibrating with a frequency of 8Hz, records the relative amplitude of 0.5 mm. Find the amplitude of displacement, velocity and acceleration of the machine vibration. **[6]**

OR

Q8) a) Explain with neat labeled sketches a typical arrangement of vibration measurement system. **[6]**

b) What is Dynamic vibration absorber? Explain working principle of undamped dynamic vibration absorber. **[6]**

c) Explain in brief various methods and techniques for vibration control. **[6]**

Total No. of Questions : 8]

SEAT No. :

PB-2390

[Total No. of Pages : 2

[6263]-240
B.E. (Mechanical Sandwich)
Artificial Intelligence In Mechanical Engineering
(Semester - VIII) (2019 Pattern) (402068)

Time : 2½ Hours] *[Max. Marks : 70*

Instructions to the candidates:

1) ***Answer Q.1 or Q.2, Q.3 or Q.4, Q.5 or Q.6, Q. 7 or Q.8.***
2) ***Neat diagrams must be drawn wherever necessary.***
3) ***Use of electronic calculator is allowed***
4) ***Assume suitable data, if necessary***

Q1) a) Explain decision tree terminology. **[6]**

b) Explain Logistic Regression. **[6]**

c) Enlist and explain steps involved in development of regression model **[5]**

OR

Q2) a) What is Support Vector Machine? How does the SVM work **[6]**

b) Explain following terms in decision tree **[6]**

i) Entropy

ii) Information gain

iii) Gini index

c) What are the various applications of machine learning in mechanical engineering? **[5]**

Q3) a) Write a short notes on **[8]**

i) Regression,

ii) Ranking.

b) Calculate **[10]**

i) Accuracy

ii) Precision

iii) Recall

iv) Fl Score

P.T.O.

		Actual Values	
		1	0
Predicted values	1	70	30
	0	10	90

OR

Q4) a) Write a short notes on **[8]**

i) Classification algorithm in ML

ii) Clustering algorithm in ML

b) Explain following terms **[10]**

i) ACCURACY

ii) PRECISION

iii) RECALL

iv) FlSCORE

Q5) a) What is the Bellman Equation? How is it helpful in RL? **[8]**

b) What is activation Functions? Explain any one in details **[10]**

OR

Q6) a) Explain elements of reinforcement learning. **[8]**

b) Explain in Detail Markov Decision Process **[10]**

Q7) a) Write short note on use of AIML in Material inspection **[5]**

b) Explain in details different applications of AIML. **[6]**

c) Make a list of maintenance and explain in brief. Discuss the scope of AIML. **[6]**

OR

Q8) a) What are different types of sensors used in human Machine Interactions. **[5]**

b) What are the advantages of using Fault detection in Automobile cars. **[6]**

c) Explain fault diagnosis (of any suitable machine element) using ML. **[6]**

Total No. of Questions : 8]

SEAT No. :

PB-2391

[Total No. of Pages : 2

[6263]-241

B.E. Mechanical Engineering(Sandwich)

AUTOMOBILE ENGINEERING

(2019 Pattern) (Semester - VIII) (402069A) (Elective - I)

Time : 2½ Hours] ***[Max. Marks : 70***

Instructions to the candidates:

1) ***Answer Q1 or Q2, Q3 or Q4, Q5 or Q6, Q7 or Q8.***
2) ***Neat diagrams must be drawn wherever necessary.***
3) ***Use of electronic calculator is allowed.***
4) ***Assume suitable data if necessary.***

Q1) a) Explain construction and working of Master cylinder used in hydraulic brake system. **[6]**

b) Differentiate between tube Tyre and tube less Tyre. **[6]**

c) Explain concept of aspect ratio used in wheel. **[5]**

OR

Q2) a) What are various functions of brake in an automobile describe purpose of parking brake. **[6]**

b) Explain with neat sketch construction of disc wheel. Write what materials are used for wheels. **[6]**

c) Describe various factors affecting performance of Tyre. **[5]**

Q3) a) Describe with suitable sketch. **[8]**

i) Voltage regulator used in charging system.

ii) Construction and working of Horn.

b) Describe with neat sketch types of headlamps used in automobile. **[10]**

OR

Q4) a) Explain role of generator used in an automobile. **[8]**

b) Explain with neat sketch construction and working of fuel gauge. **[10]**

P.T.O

Q5) a) Describe the working of a Bendix drive used in starter motors. **[8]**

b) Prepare maintenance schedule for daily, weekly and monthly maintenance of Car of your choice. **[10]**

OR

Q6) a) What are the various types of sensors used in automobile. Describe the role of any two. **[8]**

b) Write a short note on the following. **[10]**

i) Exhaust Gas recirculation

ii) Bharat stage norms

Q7) a) Write short note on the following **[9]**

i) Dwell angle calculation

ii) Fuel cell

b) Describe with neat sketch architecture of series and parallel hybrid electric drive. **[8]**

OR

Q8) a) Explain layout and various components used in electric vehicle. **[8]**

b) What are safety and challenges in electric vehicles? Explain. **[9]**



Total No. of Questions : 8]

SEAT No. :

[Total No. of Pages : 2

PB-2392

[6263]-242

B.E. Mechanical Engineering (Sandwich)

REFRIGERATION AND AIR CONDITIONING

(2019 Pattern) (Semester - VIII) (402069B) (Elective - I)

Time : 2½ Hours] *[Max. Marks : 70*

Instructions to the candidates:

1) ***Answer Q1 or Q2, Q3 or Q4, Q5 or Q6, Q7 or Q8.***
2) ***Neat diagrams must be drawn wherever necessary.***
3) ***Use of electronic calculator is allowed.***
4) ***Assume suitable data if necessary.***

Q1) a) What do mean by compound or multi stage vapour compression system? List its advantages. **[9]**

b) What are the limitations of VCC system in the field of low temperature refrigeration? **[8]**

OR

Q2) a) How does Claude cycle is differ from Linde cycle in the context of liquefaction of air? **[8]**

b) State the role of liquid intercooler, water intercooler and liquid subcooler in a multi stage vapour compression system. **[9]**

Q3) a) Draw neat sketch of sling psychrometer and explain its principal of working for measurement of temperatures. **[9]**

b) What do mean by alignment circle? Mention its utility in Psychrometry. **[9]**

OR

Q4) a) Describe briefly the physical hazards occurs due to extreme cold and Hot on human body. **[9]**

b) Explain with neat sketch the process of Chemical dehumidification. **[9]**

P.T.O

Q5) a) Define air conditioning and show relationship between the refrigeration and Air Conditioning. **[9]**

b) Which are the main factors affecting human comfort and how can these be categorized? **[9]**

OR

Q6) a) Explain charging process of refrigerant in refrigeration system with neat sketch. **[9]**

b) Explain with neat sketch flooded type evaporator. **[9]**

Q7) a) With neat sketch explain working of AHU. **[9]**

b) Draw and Explain use of Friction chart. **[8]**

OR

Q8) a) Explain static regain method of duct design. **[9]**

b) Explain types of Fans used in ducting system. **[8]**



Total No. of Questions : 8]

SEAT No. :

PB-2393

[Total No. of Pages : 2

[6263]-243

B.E. Mechanical Engineering(Sandwich)

FLUID POWER CONTROL

(2019 Pattern) (Semester - VIII) (402069C) (Elective - I)

Time : 2½ Hours] *[Max. Marks : 70*

Instructions to the candidates:

1) ***Answer Q1 or Q2, Q3 or Q4, Q5 or Q6, Q7 or Q8.***
2) ***Neat diagrams must be drawn wherever necessary.***
3) ***Use of electronic calculator is allowed.***
4) ***Assume suitable data if necessary.***

Q1) a) How does a pilot check valve differ from a simple check valve? **[8]**

b) Name three ways in which directional control valves may be actuated. **[9]**

OR

Q2) a) What is a pressure reducing valve? What is its purpose? **[8]**

b) What is a servo valve? How does it work? **[9]**

Q3) a) Why is the load carrying capacity of a regenerative cylinder small if its piston rod area is small? **[8]**

b) Draw and explain Meter-out circuit with application. **[10]**

OR

Q4) a) Draw and explain Hydraulic Motor braking system. **[8]**

b) Draw a hydraulic circuit which prevent the system from accidently falling on an operator, they also prevent overloading of the system. **[10]**

Q5) a) What is a pneumatic vacuum system? **[8]**

b) What effect do air pressure losses in pipelines have on the operation of the compressor? **[10]**

OR

Q6) a) How do pneumatic actuators differ from Hydraulic Actuators? **[8]**

b) Draw and explain with symbol and sehmatics; Filter, Regulator and Lubricator. **[10]**

P.T.O

Q7) a) What is the difference between a Programmable Logic Controller and an Electro-Mechanical Relay Control? **[8]**

b) Explain computational framework (Component Library, Simulation of Circuits, Application) to design Hydraulic/Pneumatic system. **[9]**

OR

Q8) a) Name the four important considerations that must be taken into account when analyzing or designing a pneumatic circuit. **[8]**

b) Name the steps required to size an air compressor. **[9]**



Total No. of Questions : 8] **SEAT No. :**

PB-2394

[Total No. of Pages : 2

[6263]-244
B.E. (Mechanical Sandwich Engineering)
ADDITIVE MANUFACTURING
(2019 Pattern) (Semester - VIII) (402045C) (Elective I)

Time : 2½ Hours] ***[Max. Marks : 70***

Instructions to the candidates:

1) ***Answers Q.1 or Q.2, Q.3 or Q.4, Q.5 or Q.6, Q.7 or Q.8.***
2) ***Neat diagrams must be drawn wherever necessary.***
3) ***Figures to the right side indicate full marks.***
4) ***Assume Suitable data if necessary***

Q1) a) Explain the post processing steps followed in fused deposition modeling. Discuss the possible defects in this method **[9]**

b) Explain the working principle of binder jetting with neat sketch. Discuss their advantages, disadvantages and applications. **[9]**

OR

Q2) a) Explain the construction and working principle of direct ink writing with neat sketch. Also write merits, demerits and applications. **[9]**

b) Explain the process polyjet printing. Also write the applications, merits and demerits. **[9]**

Q3) a) Explain phase transformation in additive manufacturing **[8]**

b) List out the different types of materials used in 3D printing. Explain how the material selection can be made for fabricating specific components with the help of examples. **[9]**

OR

P.T.O.

Q4) a) Discuss the various techniques used to enhance the surface properties of additively manufactured parts **[8]**

b) Explain the various design considerations/rules involved in additive manufacturing with the help suitable sketch. **[9]**

Q5) a) Explain the functions of sensors, actuators, motors and control electronics used in construction of 3D printers. **[9]**

b) Define slicing and their types. Explain the various infill strategies used for area filling the sliced model. **[9]**

OR

Q6) a) Explain the steps followed while slicing a CAD model in slicing software. **[9]**

b) Write note on : **[9]**

i) cooling system of 3D printer

ii) print bed of 3D printer

iii) 3 D printer frame

Q7) a) Discuss in brief on how the additive manufacturing is going to be a game changer in automobile and aerospace industries. **[9]**

b) How additive manufacturing can influence the mass customization? Explain in detail mentioning its future trends. **[8]**

OR

Q8) a) Discuss the reasons on how additive manufacturing influenced the growth in the production of stents used in biomedical applications. **[9]**

b) Explain the advantages and challenges involved in adopting the additive manufacturing technology in art, fashion and jewelry industry. **[8]**

.

Total No. of Questions : 8]

SEAT No. :

PB-2395

[Total No. of Pages : 2

[6263]-245
B.E. (Mechanical Sandwich)
AUTOMATION AND ROBOTICS
(2019 Pattern) (Semester - VIII) (402051C) (Elective - I)

Time : 2½ Hours] *[Max. Marks : 70*

Instructions to the candidates:

1) ***Solve Q1 or Q2, Q3 or. Q4, Q5 or. Q6, Q.7 or Q8***
2) ***Neat diagrams must be drawn wherever necessary.***
3) ***Figures to the righit side indicate full marks.***
4) ***Use of calculator is allowed.***
5) ***Assume Suitable data if necessary***

Q1) a) State the Salient Features and application BLDC. **[6]**

b) Write the different between Hydraulic Drives and Pneumatic Drives **[5]**

c) Explain Power and Motion Transmission Systems for Robot. **[7]**

OR

Q2) a) Explain Micro actuators with example. **[6]**

b) What are Cycloidal Gearbox and How Does it Works? **[8]**

c) State the application of Mechanical Drives **[4]**

Q3) a) Explain Tooling Interface used in robotics application. **[8]**

b) Explain Safety Sensors used in Robotic Applications. **[6]**

c) Give the Classification of Resolvers. **[3]**

OR

Q4) a) Discuss various type of End-Effectors used in robotics **[6]**

b) Explain the working of any two type of Transducers with neat sketch **[8]**

c) Write the Difference Between Active and Passive Compliance **[3]**

P.T.O.

Q5) a) With the help of suitable illustration explain the significance of D-H parameters **[7]**

b) The coordinate of point $P_{abc} = (5,4,3)^T$ in the body coordinate frame OABC is rotated 300 about 0 axis. Determine the coordinated of vector P_{xyz} with respect to base reference frame **[6]**

c) Write notes on: Composite Rotation matrix **[4]**

OR

Q6) a) Explain Newtonian Approaches for formulation of equations of motion of planar two link **[7]**

b) Explain Inverse Kinematics of two joints **[4]**

c) With the help of suitable illustration explain the significance of Inverse Transformations **[6]**

Q7) a) Explain Motion Programming with suitable illustration. **[8]**

b) Write a short notes on **[10]**

i) Hybrid Terrestrial Mobile Robots

ii) Humanoids robots

OR

Q8) a) Write the different between Simulation and Off-line Programming **[6]**

b) Write a any three Applications of Robots in Non-manufacturing filed **[12]**

.

Total No. of Questions : 8]

SEAT No. : ____

PB2396

[Total No. of Pages : 2

[6263]-246

B.E. (Mechanical S/W)

INTERNET OF THINGS

(2019 Pattern) (Semester - VIII) (Elective - II) (402044E)

Time : 2½ Hours] ***[Max. Marks : 70***

Instructions to the candidates:

1) ***Solve Q.1 or Q.2, Q.3 or Q.4, Q.5 or Q.6, Q.7 or Q.8.***
2) ***Neat diagrams must be drawn wherever necessary.***
3) ***Figures to the right indicate full marks.***
4) ***Use of electronic pocket calculator is allowed.***
5) ***Assume suitable data, if necessary.***

Q1) a) Explain Basics of Embedded C programming. **[7]**

b) What are the main design principles and needed capabilities in IoT? **[6]**

c) Explain the IoT Input-Output Interface. **[5]**

OR

Q2) a) Explain the Motion Sensor interfacing with any board. **[6]**

b) Describe three types of Serial Communication protocols supported by Arduino family communication peripherals. **[8]**

c) Explain Output Sensors. **[4]**

Q3) a) Explain in detail IoT Communication APIs. **[5]**

b) Discuss any four popular IoT Platforms used today. **[7]**

c) Explain Global Positioning System (GPS) communication. **[5]**

OR

Q4) a) State the different between Wires Vs Wireless Communication. **[5]**

b) Explain M2M and WSN Protocols in details. **[7]**

c) What are the advantages and disadvantages of Cloud Computing? **[5]**

P.T.O.

Q5) a) Describe and illustrate the structure of Representational State Transfer (REST) protocol. **[9]**

b) Write a short note on **[8]**

i) IoT security for consumer devices

ii) Security levels

OR

Q6) a) Compare Message Queueing Telemetry (MQTT) protocol with Hyper Text Transport Protocol (HTTP). **[8]**

b) Describe and illustrate the structure of Hyper Text Transport Protocol (HTTP). **[9]**

Q7) a) Explain any two Future Factory Concepts. **[10]**

b) Explain Home automation with example. **[8]**

OR

Q8) a) What are the legal challenges in implementing IoT applications? **[10]**

b) Describe IoT Applications in Environmental Protection Modern Day. **[8]**

Total No. of Questions : 8]

SEAT No. : [ ]

PB2397

[Total No. of Pages : 2

[6263]-247

B.E. (Mechanical Engineering) (Sandwich)

PRODUCT DESIGN AND DEVELOPMENT

(2019 Pattern) (Semester - VIII) (Elective - II) (402045A)

Time : 2½ Hours] ***[Max. Marks : 70***

Instructions to the candidates:

1) ***Solve Q.1 or Q.2, Q.3 or Q.4, Q.5 or Q.6, Q.7 or Q.8.***
2) ***Neat diagrams must be drawn wherever necessary.***
3) ***Figures to the right indicate full marks.***
4) ***Use of electronic pocket calculator is allowed.***
5) ***Assume suitable data, if necessary.***

Q1) a) List down different Idea Generation approaches and explain any one. **[9]**

b) List down different methods used for functional decomposition and explain any one. **[9]**

OR

Q2) a) What is concept selection? Explain Pugh's chart with example. **[9]**

b) What is forward and reverse engineering? Discuss the necessity and process of product teardown. **[9]**

Q3) a) Explain the process of Concept Embodiment. **[8]**

b) What is Part print analysis? Explain in detail. **[9]**

OR

Q4) a) Explain the principles of DFMA. **[8]**

b) What is product modularity? Explain types of Modularity. **[9]**

P.T.O.

Q5) a) What is PPAP? List down the elements of PPAP. **[9]**

b) List down different design simulation techniques and explain any two. **[9]**

OR

Q6) a) Explain SLS (Selective laser sintering) in detail with suitable sketch. **[9]**

b) Differentiate product testing and product validation. **[9]**

Q7) a) Write a note on PLM. **[8]**

b) Discuss design for robustness in detail. **[9]**

OR

Q8) a) Explain DFMEA. **[8]**

b) Write a short note on VAVE. **[9]**



Total No. of Questions : 8]

SEAT No. : [ ]

PB2398

[Total No. of Pages : 4

[6263]-248

B.E. (Mechanical Sandwich)

OPERATIONS RESEARCH

(2019 Pattern) (Semester - VIII) (Elective - II) (402045D)

Time : 2½ Hours] ***[Max. Marks : 70***

Instructions to the candidates:

1) ***Answer Q.1 or Q.2, Q.3 or Q.4, Q.5 or Q.6 and Q.7 or Q.8.***
2) ***Answers in One Answer Books.***
3) ***Figures to the right indicate full marks.***
4) ***Assume suitable data, if necessary.***

Q1) a) Write the generalized syntax of LPP. Discuss the following terms related to LPP. **[5]**

i) Objective function

ii) Feasible solution

iii) Constraints

b) Anita Electric Company produces two products P1 and P2. Products are produced and sold on a weekly basis. The weekly production cannot exceed 25 for product P1 and 35 for product P2 because of limited available facilities. The company employs total of 60 workers. Product P1 requires 2 man-weeks of labor, while P2 requires one man-week of labor. Profit margin on P1 is Rs. 60 and on P2 is Rs. 40. Formulate this problem as an LP problem and solve that using graphical method. **[12]**

OR

Q2) a) Explain the various steps of the simplex method involved in the computation of an optimum solution to a linear programming problem. **[5]**

b) Use the simplex method to solve the following LP problem. **[12]**

Maximize $Z = 3x_1 + 5x_2 + 4x_3$

subject to the constraints

i) $2x_1 + 3x_2 \leq 8$,

ii) $2x_2 + 5x_3 \leq 10$,

iii) $3x_1 + 2x_2 + 4x_3 \leq 15$ and $x_1, x_2, x_3 \geq 0$

P.T.O.

Q3) a) Explain the generalized syntax of assignment and transportation problems. **[8]**

b) A department of a company has five employees with five jobs to be performed. The time (in hours) that each man takes to perform each job is given in the effectiveness matrix. **[10]**

		Employee				
		I	II	III	IV	V
Jobs	A	10	5	13	15	16
	B	3	9	18	13	6
	C	10	7	2	2	2
	D	7	11	9	7	12
	E	7	9	10	4	12

OR

Q4) a) Discuss the Hungarian method with the help of flow chart for assignment problem. **[8]**

b) Find the initial basic feasible solution by using Vogel's Approximation Method. **[10]**

W→ F ↓	W_1	W_2	W_3	W_4	Factory Capacity
F_1	19	30	50	10	7
F_2	70	30	40	60	9
F_3	40	8	70	20	18
Warehouse Requirement	5	8	7	14	34

Q5) a) Describe the problem of replacement of items whose maintenance cost increase with time. Assume that the value of money remains constant. **[6]**

b) A firm is considering the replacement of a machine, whose cost price is Rs. 12,200, and its scrapvalue is Rs. 200. From experience the running (maintenance and operating) costs are found to be as follows: **[12]**

Year :	1	2	3	4	5	6	7	8
Running cost (Rs.):	200	500	800	1,200	1,800	2,500	3,200	4,000

When should the machine be replaced?

OR

Q6) a) Discuss the basic differences between PERT and CPM. **[6]**

b) The following network diagram represents activities associated with a project: **[12]**

Activities :	A	B	C	D	E	F	G	H	I
Optimistic time, t_0 :	5	18	26	16	15	6	7	7	3
Pessimistic time, t_p :	10	22	40	20	25	12	12	9	5
Most likely time, t_m :	8	20	33	18	20	9	10	8	4

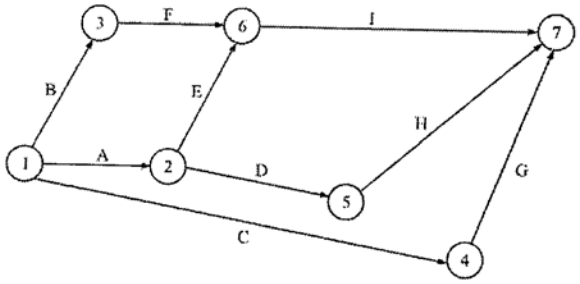

Determine the following:

i) Expected completion time and variance of each activity.

ii) The earliest and latest expected completion times of each event.

iii) The critical path.

iv) The probability of expected completion time of the project if the original scheduled time of completing the project is 41.5 weeks.

v) The duration of the project that will have 95 per cent chance of being completed.

Q7) a) What is Monte Carlo simulation? Describe the idea of experimentation (Random sampling) in simulation. **[5]**

b) The management of ABC company is considering the question of marketing a new product. The fixed cost required in the project is Rs. 4,000. Three factors are uncertain, viz., the selling price, variable cost and the annual sales volume. The product has a life of only one year. The management has the data on these three factors as under : **[12]**

Selling Price (Rs.)	Probability	Variable Cost (Rs)	Probability	Sales Volume (Units)	Probability
3	0.2	1	0.3	2,000	0.3
4	0.5	2	0.6	3,000	0.3
5	0.3	3	0.1	5,000	0.4

Considering the following sequence of thirty random numbers: 81, 32, 60, 04, 46, 31, 67, 25, 24, 10, 40, 02, 39, 68, 08, 59, 66, 90, 12, 64, 79, 31, 86, 68, 82, 89, 25, 11,98, 16.

Using the sequence (First 3 random numbers for the first trial, etc.) simulate the average profit for the above project on the basis of 10 trails.

OR

Q8) a) Discuss dynamic programming with suitable examples. **[5]**

b) An electronic device consists of four components, each of which must be functional for the system to function. The system reliability can be improved by installing parallel units in one or more components. The reliability of components, R, with one, two, or three parallel units, and the corresponding cost, C are given below. The maximum amount available for this device is 100. The problem is to determine the number of parallel units in each component. **[12]**

Number of Parallel Units	Components							
	1		2		3		4	
	R	C	R	C	R	C	R	C
1	0.70	10	0.50	20	0.70	10	0.60	20
2	0.80	20	0.70	40	0.90	30	0.70	30
3	0.90	30	0.80	50	0.95	40	0.90	40

Total No. of Questions : 8]

SEAT No. : ____

PB2399

[Total No. of Pages : 4

[6263]-249

B.E. (Mechanical Sandwich)

QUALITY & RELIABILITY ENGINEERING

(2019 Pattern) (Semester - VIII) (402050A) (Elective - II)

Time : 2½ Hours] ***[Max. Marks : 70***

Instructions to the candidates:

1) ***All questions are compulsory.***
2) ***Solve Q.1 or Q.2, Q.3 or Q.4, Q.5 or Q.6, Q.7 or Q.8.***
3) ***Neat diagrams must be drawn wherever necessary.***
4) ***Figures to the right indicate full marks.***
5) ***Assume Suitable data, if necessary and mention it clearly.***

Q1) a) Define Reliability and explain the reasons for unreliability of an engineering system. **[7]**

b) Following table shows the test results for 100 components tested simultaneously. **[10]**

Time (hrs)	0	10	20	30	40	50	60	70	80	90	100
No. of Surviving components	100	90	81	73	66	60	55	50	45	41	37

Evaluate: Hazard rate, Failure density function, reliability and plot these functions against time.

OR

Q2) a) Draw a '*Bath Tube Curve*' and explain the following regions in it **[7]**

i) Infant Mortality

ii) Normal operation period.

iii) Wear out period.

P.T.O.

b) Following table shows the result of life tests carried out on 100 components simultaneously. **[10]**

Time (hrs)	0	1	2	3	4	5	6	7	8	9	10
No.of Failures	0	50	30	80	70	90	80	30	50	15	05

Evaluate: Hazard rate, Failure density function, reliability and plot these functions against time.

Q3) a) Consider a system composed of three subsystems with estimated failure rates of $\lambda_1 = 0.005$, $\lambda_2 = 0.003$ and $\lambda_3 = 0.001$ failure per hour respectively. The system has a mission time of 20 hours. A system reliability of 0.96 is required. Find the reliability requirements for the subsystems. **[8]**

b) Evaluate system reliability using conditional probability method for the given system shown in Figure below **[10]**

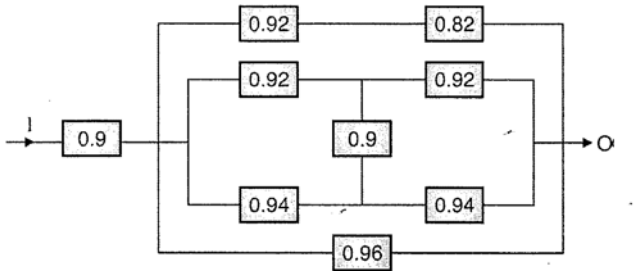

OR

Q4) a) Determine the system reliability of the system shown in fig. below. **[8]**

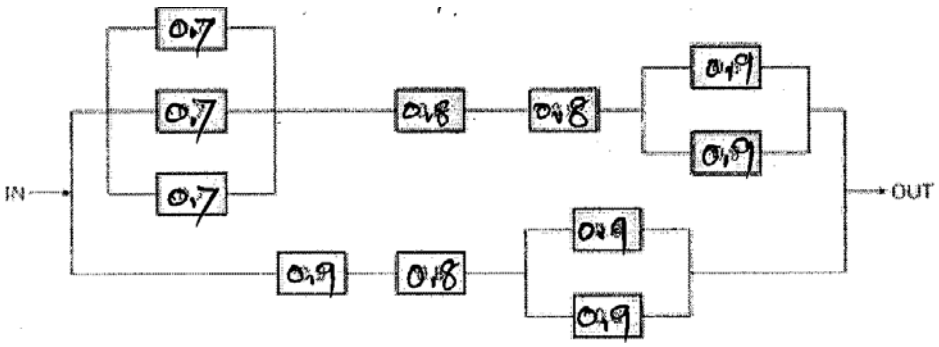

b) Evaluate reliability of the system using cut set-Tie set method and draw equivalent block diagram for minimal cut set and tie set. If all components are identical and independent with reliability 0.8, determine the system reliability. **[10]**

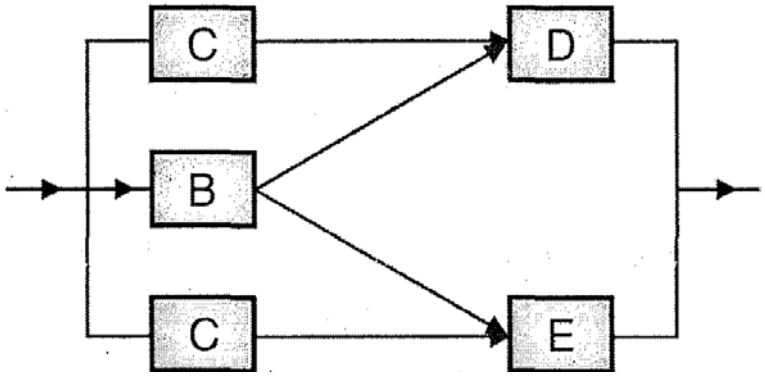

Q5) a) Discuss the method of obtaining criticality of a component or a subsystem using Risk Priority Number (RPN). **[5]**

b) Draw the fault tree diagram for a three unit system shown in fig. below. This system fails when component C_1 fails, or both the component C_2 and C_3 fails, or all three components fail. **[6]**

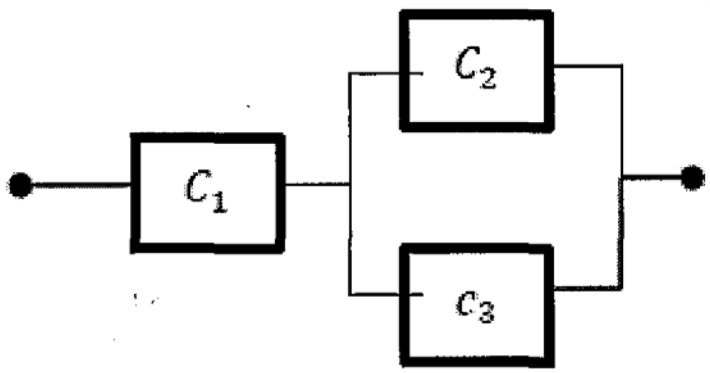

c) Explain Ishikawa diagram for Failure representation with suitable example.**[6]**

OR

Q6) a) Explain methods to determine minimal cut sets with hypothetical example. **[5]**

b) What is fault tree analysis (FTA)? Give four basic symbols used in FTA. **[6]**

c) Refer the block diagram shown in fig below. The failure rates of elements A, B, and C are 0.003, 0.002, and 0.004 per hour respectively. The elements D, and E have failure rates of 0.001 and 0.002 respectively. Construct fault tree for this system it and find its failure rate. **[6]**

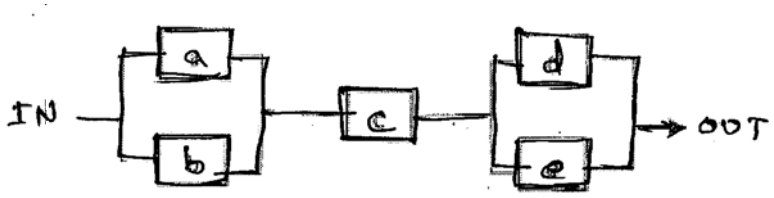

Q7) a) Explain the term Availability and Maintainability with the help of suitable example. **[6]**

b) Explain the difference between Predictive Preventive Maintenance and Periodic Preventive Maintenance. **[6]**

c) Explain load-strength interaction in design based reliability. **[6]**

OR

Q8) a) Explain the preventive maintenance and corrective maintenance. **[6]**

b) Write a note on "Highly Accelerated Life testing". **[6]**

c) Explain the causes of failures of engineering components and systems. **[6]**

Total No. of Questions : 8]

SEAT No. : [ ]

PB2400

[Total No. of Pages : 2

[6263]-250

B.E. (Mechanical Sandwich)

ELECTRICAL AND HYBRID VEHICLE

(2019 Pattern) (Semester - VIII) (Elective - II) (402051E)

Time : 2½ Hours] ***[Max. Marks : 70***

Instructions to the candidates:

1) ***Answer four questions from the following***
2) ***Draw neat labeled diagrams wherever necessary***
3) ***Figures to the right side indicate full marks.***
4) ***Use of non-programmable electronic calculator is permitted.***
5) ***Assume Suitable/Standard data if necessary.***

Q1) a) Describe and Illustrate the Energy Storage System Types and Packs Classification. **[8]**

b) Explain the Applications of three types of Motors and their Design with Examples. **[9]**

OR

Q2) a) Determine the rating of motor required for following data: **[8]**

Gross curb weight (GCW) = 150Kg

Battery rating = 30Ah

Working voltage = 72V

Efficiency of motor = 95%

Acceleration required = 0 to 60 km/hr in 10 seconds

Road gradient 10°

Vehicle range = 150Km

b) Describe and Illustrate the BCU, their types. **[9]**

P.T.O.

Q3) a) Explain and illustrate Fuel Efficiency Analysis. **[8]**

b) Describe and Illustrate the Effect of Rolling, Pitch & Yaw on velocity and movements. **[9]**

OR

Q4) a) Describe and Illustrate the Brake System anti its types. **[8]**

b) Differentiate between Mechanical Differential and Electric Differential. **[9]**

Q5) a) Describe and illustrate the Aesthetics and Ergonomics consideration for varieties of electric vehicle configuration. **[9]**

b) What is the Homologation of Vehicles? **[9]**

OR

Q6) a) Describe and illustrate the Driving dynamics and Comfort as well as the Anatomy and Terminology of Car Package. **[9]**

b) Explain Need of vehicle Testing. What are the National/International Testing/ Regulation/Licensing/Approval Organizations and Agencies? **[9]**

Q7) a) What are the Charging Methods and the Charging Standards? **[9]**

b) Describe and illustrate Charger Architectures. **[9]**

OR

Q8) a) Explain the Boost Converter for Power Factor Correction with Examples. **[9]**

b) Write detail note on end of life management of EVs and their batteries. **[9]**

x x x

Total No. of Questions : 8]

SEAT No. : ____

PB-2401

[Total No. of Pages : 2

[6263]-251

B.E. (Printing Engineering)

GRAVURE PRINTING TECHNIQUES

(2019 Pattern) (Semester - VII) (408283)

Time : 2½ Hours] ***[Max. Marks : 70***

Instructions to the candidates :

1) ***Attempt Q.No.1 or Q.No.2, Q.No.3 or Q.No.4, Q.No.5 or Q.No.6, Q.No.7 or Q.No.8.***
2) ***Figures to the right side indicate full marks.***
3) ***Neat diagrams must be drawn wherever necessary.***
4) ***Assume suitable data, if necessary.***

Q1) a) Describe different Types of Inks and Solvents used for Gravure. **[9]**

b) Explain Compatibility of Resin with Solvents. **[8]**

OR

Q2) a) Explain gravure process in detail with diagram. **[6]**

b) Purpose of slow drying and fast-drying solvents. **[6]**

c) Define Ink Transfer in Sheet fed Gravure. **[5]**

Q3) a) Explain the significance viscosity on print quality. **[9]**

b) Explain Flammability of solvents. **[9]**

OR

Q4) a) Define dryer and its Types. Need of Dryers used on a gravure press. **[9]**

b) Define OSHA (Occupational Safety and Health Association Standards). **[9]**

Q5) a) What is Impression Cylinder and affect print quality due to pressure. **[8]**

b) Explain specifications for impression rollers. **[5]**

c) Describe effect of ESA parameters on ink transfer. **[5]**

OR

P.T.O.

Q6) a) Explain ESA and Effect of ESA on Print Quality. **[13]**

b) Effect of ESA parameters on ink transfer. **[5]**

Q7) Write a note on :

a) Web Viewing System **[6]**

b) Electronic Line Shaft **[6]**

c) Gravure Troubleshooting **[5]**

OR

Q8) Write a note on :

a) 3” and 6” air expandable shafts, **[6]**

b) Web aligner **[6]**

c) Mounting Techniques of Web Aligner System **[5]**

▽▽▽▽

Total No. of Questions : 8]

SEAT No. : ____

PB2402

[Total No. of Pages : 2

[6263]-252

B.E. (Printing Technology)

DIGITAL PRINTING TECHNIQUES

(2019 Pattern) (Semester - VII) (408284)

Time : 2½ Hours] ***[Max. Marks : 70***

Instructions to the candidates:

1) ***Answer Q1 or Q2, Q3 or Q4, Q5 or Q6, Q7 or Q8.***
2) ***Figures to the right indicate full marks.***
3) ***Assume suitable data, if necessary.***
4) ***Neat diagrams must be drawn wherever necessary.***

Q1) a) Explain functions of Digital Image Processing and its applications. **[10]**

b) Explain Dye Sublimation Printing process. **[8]**

OR

Q2) a) Explain 5 classifications of the proof. **[10]**

b) Explain the concept of OCR and its applications. **[8]**

Q3) a) Draw the diagram of digital camera and explain the structure. **[10]**

b) Explain Concept of Input resolution. **[7]**

OR

Q4) a) Explain working of the scanner with diagram. **[10]**

b) Explain various barcode scanners. **[7]**

P.T.O.

Q5) Explain Inkjet Process - Continous and Drop on Demand. Also discuss advantages and disadvantages of both the processes. **[18]**

OR

Q6) Explain Principal and Application of - Electrophotography, Magnetography and logography. **[18]**

Q7) Explain all the applications of variable data printing. **[17]**

OR

Q8) Explain communication link between Designer and Trade Shop with neat diagram. **[17]**

x x x

Total No. of Questions : 8]

SEAT No. :

PB-4472

[Total No. of Pages : 2

[6263]-253
B.E. (Printing Technology)
PAPER BOARD AND CORRUGATION PACKAGE TECHNOLOGY
(2019 Pattern) (Semester - VII) (408281 A) (Elective - III)

Time : 2½ Hours] *[Max. Marks : 70*

Instructions to the candidates :

1) ***Attempt Q.No.1 or Q.No.2, Q.No.3 or Q.No.4, Q.No.5 or Q.No.6, Q.No.7 or Q.No.8.***
2) ***Figures to the right side indicate full marks.***
3) ***Neat diagrams must be drawn wherever necessary.***
4) ***Assume suitable data, if necessary.***

Q1) a) Explain in detail the process of manufacturing glue applied labels along with its applications. **[10]**

b) Explain "Shrink sleeves" with applications and diagram. **[7]**

OR

Q2) a) Explain in detail the process of manufacturing liquid filled cartons along with its applications. **[10]**

b) Explain "In mold labels" with applications and diagram. **[7]**

Q3) Explain in detail the manufacturing of jigged punching die with complete manual method along with neat diagrams. **[18]**

OR

Q4) a) Draw a neat diagram of STE and label all the parts. Also explain the application of each part in brief. **[9]**

b) Explain the use of corking in die making along with neat diagram. **[9]**

Q5) Explain in detail the manufacturing of single facer corrugation board along with neat diagram of machine. **[17]**

OR

P.T.O.

Q6) a) Explain various types of flutes used in corrugation industry along with their technical specifications and applications. **[10]**

b) Draw a diagram of single wall corrugated board, label the diagram and explain the applications of the same. **[7]**

Q7) Explain the ECT in detail along with diagram and its application. **[18]**

OR

Q8) a) Write a short note on corrugation testing procedure. **[9]**

b) Write a short note on FCT. **[9]**

▽▽▽▽

Total No. of Questions : 8]

SEAT No. :

PB-2403

[Total No. of Pages : 2

[6263]-254

B.E. (Printing Engineering)

POLYMER SCIENCE

(2019 Pattern) (Semester - VII) (408281B) (Elective-III)

Time : 2½ Hours] ***[Max. Marks : 70***

Instructions to the candidates:

1) ***Solve Q.1 or Q.2, Q.3 or Q.4, Q.5 or Q.6, Q.7or Q.8.***
2) ***Figure to the right indicates full marks.***

Q1) a) Briefly explain the difference between glass transition temperature and melting temperature. **[6]**

b) What is thermal conductivity of any polymer material. Briefly explain. **[6]**

c) Draw the stress strain curve of a typical polymeric material and label the parts. **[6]**

OR

Q2) a) Determine Young's modulus, when 3 N/m^2 stress is applied to produce a strain of 0.5. in a polymeric material. **[6]**

b) What is water vapour transmission rate. How is it measured? **[6]**

c) With a neat sketch, explain what is haze? **[6]**

Q3) a) Briefly explain any six reasons for the use of additives in resin? **[6]**

b) What are the advantages of twin-screw extruder over single screw extruder? **[6]**

c) What is the role of antioxidants in a polymeric material. **[5]**

OR

Q4) a) Briefly explain oxygen scavengers with suitable examples. **[6]**

b) What are antifogging agents? What are the factors which affect the performance of antifogging agents? **[6]**

c) What are the differences between a pigment and a dye? **[5]**

P.T.O.

Q5) a) Explain in detail the orientation, crystallization and the crosslinking methods of changing the mechanical properties of a polymer. **[12]**

b) Explain in brief any two surface treatments for thin film polymeric materials. **[6]**

OR

Q6) a) Explain in detail the FTIR, X-ray fluorescence spectroscopy and Auger electron spectroscopy methods for the identification of polymers. **[12]**

b) What is the significance of sulphonation of polymers. **[6]**

Q7) a) Explain in brief the factors affecting permeability of a polymer molecule into the food contents stored in a package. **[6]**

b) With a neat sketch explain the difference between sorption, diffusion and desorption? **[6]**

c) The water vapour transmission rate of a film 25 microns thick measured by the ASTM dish method at 100°F and 90% RH is 0.1 g/day m^2. The saturated vapour pressure of water at 100°C is 49.7 mmHg. Calculate P. **[5]**

OR

Q8) a) What is migration? How migration of polymer molecules into food material is avoided? **[6]**

b) Define Fick's first law of diffusion. **[6]**

c) Assume that the GTR of oxygen through a 1-mil PE film, GTR=3.5×10^{-2} g/hm^2, When the partial difference pressure difference through the film Dp is 30 mm Hg. Calculate the permeance and the permeability coefficient. **[5]**

Total No. of Questions : 8]

SEAT No. :

PB2404

[Total No. of Pages : 2

[6263]-255
B.E. (Printing Technology)
MULTIMEDIA ADVERTISING
(2019 Pattern) (Semester - VII) (Elective - IV) (408282A)

Time : 2½ Hours] *[Max. Marks : 70*

Instructions to the candidates:

1) ***Attempt Q.1 or Q.2, Q.3 or Q.4, Q.5 ro Q.6 Q.7 ro Q.8.***
2) ***Figures to the right indicate full marks.***

Q1) For following media used in advertising, state the features, advantages and limitations if any for each. **[18]**

a) Print media

b) Social media

c) AV media

d) Outdoor media

OR

Q2) With the suitable case study, discuss the types of advertising media used for FMCG products, Semi durable products and durable products each. **[18]**

Q3) Explain three phases of campaign planning in details with suitable example. **[17]**

OR

Q4) Explain following terms with suitable examples : **[17]**

a) Brand personality

b) Brand positioning

c) Brand equity

P.T.O.

Q5) Explain the difference between construction of advertisement for print media (newspaper) and outdoor media (hoarding) for the same product. Explain each element in details. **[18]**

OR

Q6) What are the different types of headlines used in advertisements? State each with suitable examples. **[18]**

Q7) What is digital advertising? Explain with suitable case study. **[17]**

OR

Q8) Explain the concept of content marketing with suitable case study. **[17]**



Total No. of Questions : 8]

SEAT No. :

PB-2405

[Total No. of Pages : 2

[6263]-256

B.E. (Printing Engineering)

PROCESS OPTIMIZATION AND TOTAL QUALITY MANAGEMENT IN PRINTING

(2019 Pattern) (Semester - VII) (408282B) (Elective - IV)

Time : 2½ Hours] *[Max. Marks : 70*

Instructions to the candidates:

1) ***Answer Q1 or Q2, Q3 or Q4, Q5 or Q6 and Q7 or Q8.***
2) ***Figures to the right indicate full marks.***
3) ***Assume suitable data, if necessary.***
4) ***Neat diagrams must be drawn wherever necessary.***
5) ***Use of electronic pocket calculator is allowed.***

Q1) What are the different types of measurement instruments used in the Printing industry? How are these instruments calibrated? Why is calibration required for these instruments? **[17]**

OR

Q2) What is TPM? Explain QM, Training & Education, Office TPM pillars with suitable examples with reference to printing industry. **[17]**

Q3) What do ISO12647 standards recommend? Describe ISO12647 in detail. **[18]**

OR

Q4) What is the purpose of ICC (International Color Consortium)? Explain the role of an ICC profile in print production. **[18]**

Q5) What is print process control? Explain print process control giving an example? **[17]**

OR

P.T.O.

Q6) What is Characterisation? Calculate CIEXYZ of the given colour patches using the below given 3 × 3 matrix. **[17]**

	R	G	B
Patch 1	0.408	0.60	0.075
Patch 2	0.114	0.114	0.866

$$\text{Matrix}: \begin{bmatrix} 0.412 & 0.357 & 0.181 \\ 0.212 & 0.715 & 0.072 \\ 0.019 & 0.119 & 0.950 \end{bmatrix}$$

Q7) What is Multiple Linear Regression? Explain Multiple Linear Regression with an example. **[18]**

OR

Q8) What is correlation? Explain positive and negative correlation. Calculate coefficient of correlation (*r*) using the below equation for the 5 Delta E measurements provided below. **[18]**

$$r = \pm\sqrt{\frac{(y_{est} - \bar{y})^2}{(y_j - \bar{y})^2}}$$

Yest = measured values (1,89635803 1,33318182 0,52346324 0,66334739 0,34095419)

Yj = estimated values (1,9963 1,8331 0,3234 0,9633 0,8409)

Ybar = average of the measured values

⌘⌘⌘

Total No. of Questions : 8]

SEAT No. : ____

PB-2406

[Total No. of Pages : 2

[6263]-257

B.E. (Printing Technology)

OPERATIONS MANAGEMENT IN PRINTING AND PACKAGING

(2019 Pattern) (Semester - VIII) (408290)

Time : 2½ Hours] ***[Max. Marks : 70***

Instructions to the candidates:

1) ***Solve Q1 or Q2, Q3 or Q4, Q5 or Q6, Q7 or Q8.***
2) ***Figures to the right indicate full marks.***
3) ***Assume suitable data, if necessary***
4) ***Neat diagrams must be drawn wherever necessary.***
5) ***Use of electronic pocket calculator is allowed.***

Q1) State Continuous or flow production system its features, advantages, limitations if any **[18]**

OR

Q2) State about Batch and mass production systems their features, advantages, limitations if any. **[18]**

Q3) Find an optimal sequence for following sequencing problem. Also find total elapsed time : **[17]**

Job	1	2	3	4
Machine M1	6	5	4	7
Machine M2	4	5	3	2
Machine M3	1	3	4	2
Machine M4	2	4	5	1
Machine M5	8	9	7	5

OR

P.T.O.

Q4) Find the optimal sequence for following sequencing problem of 4 jobs on 5 machines, when passing is not alowed. Its processing time (in hours) is given below : **[17]**

Job	Machine				
	M1	M2	M3	M4	M5
A	7	5	2	3	9
B	6	6	4	5	10
C	5	4	5	6	8
D	8	3	3	2	6

Q5) What are functions of production planning and control, explain with suitable case study. **[18]**

OR

Q6) What are stages of production planning and control, explain in greater details. **[18]**

Q7) What is product life cycle, what is its impact on production planning and control. **[17]**

OR

Q8) Compare and contrast between product breakdown structure and work breakdown structure. **[17]**

⌘⌘⌘

Total No. of Questions : 8]

SEAT No. :

PB2407

[Total No. of Pages :2

[6263]-258
B.E. (Printing Technology)
ADHESIVES AND COATINGS IN PACKAGING
(2019 Pattern) (Semester-VIII) (408291)

Time : 2½ Hours] *[Max. Marks : 70*

Instructions to the candidates:

1) ***Attempt Q.No.1 or Q.No.2, Q.No.3 or Q.No.4, Q.No.5 or Q.No.6, Q.No.7 or Q.No.8.***
2) ***Figures to the right indicate full marks.***
3) ***Assume suitable data, if necessary.***
4) ***Neat diagrams must be drawn wherever necessary.***

Q1) a) What are lamination adhesives? Explain various applications. **[7]**

b) Compare wet lamination and dry lamination. State it's applications. **[10]**

OR

Q2) a) Explain in detail following tests: Tack, Peel Resistance, Cohesive strenght/ or Shear resistance. **[6]**

b) Explain raw material testing in adhesives. **[5]**

c) Compare general label and pressure-sensitive labels. **[6]**

Q3) a) Explain briefly on various Coatings used for metals and flexible films to provide gloss and surface hardness such as prevent scuffing. **[12]**

b) Explain what is release liners in case of labels. Why coating is important in this application. **[6]**

OR

Q4) a) Explain difference between Water Resistant Barriers vs. Water Vapour Barriers. **[6]**

b) State any 4 selection criteria of water-based coatings for food-grade packaging. **[12]**

P.T.O.

Q5) a) Describe the Gravure Coating process used in coating of liquids. Draw neat diagrams wherever necessary. **[6]**

b) Describe the difference between air knife and doctor blade in gravure application. **[6]**

c) Draw a neat diagram of 5 roll coating machine. **[5]**

OR

Q6) a) Describe all types of comma coating techniques. **[7]**

b) Explain coating rod method and draw neat diagram of Meyers Coating rod method. **[10]**

Q7) a) Describe any 3 adhesion test methods. **[12]**

b) Explain significance of various standards to test the adhesives. **[6]**

OR

Q8) a) Explain scratch resistance testing with a neat diagram. **[6]**

b) In testing of Adhesives explain Breaking Strength and Elongation at Break. **[12]**

Total No. of Questions : 8]

SEAT No. :

PB-2408

[Total No. of Pages : 2

[6263]-259
B.E. (Printing Technology)
FOOD AND PHARMACEUTICAL PACKAGING
(2019 Pattern) (Semester - VIII) (Elective V) (408288 A)

Time : 2½ Hours] *[Max. Marks : 70*

Instructions to the candidates:

1) ***Solve Q1 or Q2, Q3 or Q4, Q5 or Q6, Q7 or Q8***
2) ***Figures to the right indicate full marks.***
3) ***Assume suitable data, if necessary***
4) ***Neat diagrams must be drawn wherever necessary***
5) ***Use of electronic pocket calculator is allowed***

Q1) a) Explain the operating principals for hot foil stamping with applications. **[9]**

b) Explain Co-Extrusion Process and explain its benefits **[9]**

OR

Q2) a) Explain Hot foil stamping process & its types with applications **[9]**

b) What are the challenges packaging industry facing with Co-extruding process of dissimilar polymers **[9]**

Q3) a) Explain the concept of Bottle filling System **[8]**

b) Explain the working principle of Multi-head weighers and draw a labelled diagram. **[9]**

OR

Q4) a) Explain four different types of sealing systems. **[8]**

b) Explain the concept of Capping with its types **[9]**

P.T.O.

Q5) a) Differentiate blister packaging and strip packaging with advantages and disadvantages **[9]**

b) Explain Bag-in-Box technology and its benefits **[9]**

OR

Q6) a) What are the Steps involved in Retort Pouch Processing explain them **[9]**

b) What is strip Packaging Process and write down the procedure of making strip packaging. **[9]**

Q7) a) Which are Factors affecting Product Quality and Shelf Life explain **[8]**

b) What Qualification and Quality Control need for Pharmaceutical Packaging Components **[9]**

OR

Q8) a) What type of material and structure required for food packaging with examples **[8]**

b) Explain Quality Specifications required for food packaging **[9]**

.

Total No. of Questions : 8]

SEAT No. : ____

PB2409

[Total No. of Pages : 1

[6263]-261

B.E. (Printing Technology)

SUSTAINABLE PACKAGING

(2019 Pattern) (Semester-VIII) (408289 A) (Elective-VI)

Time : 2½ Hours] ***[Max. Marks : 70***

Instructions to the candidates:

1) ***Answer Q.1 or Q.2, Q.3 or Q.4, Q. 5 or Q. 6, Q. 7 or Q. 8.***
2) ***Figures to the right indicate full marks.***
3) ***Assume suitable data, if necessary.***
4) ***Neat diagrams must be drawn whenever necessary.***
5) ***Use of an electronic pocket calculator is allowed.***

Q1) Explain in detail packaging innovation for a Beverage Industry. **[18]**

OR

Q2) Explain in detail the requirements to be met for a sustainable package. **[18]**

Q3) Explain the role of plastics in daily life and its negative impacts. **[17]**

OR

Q4) Explain in detail the stages packaging project life cycle. **[17]**

Q5) Define life cycle assessment and the stages involved in LCA. **[18]**

OR

Q6) Explain Green House Gas Emission along with their scope. **[18]**

Q7) Explain the impact of supply chain management in sustainable packaging **[17]**

OR

Q8) Explain in detail different marketing strategies for brands. **[17]**

● ● ●

Total No. of Questions : 8]

SEAT No. :

PB2410

[Total No. of Pages : 2

[6263]-262

B.E. (Printing Technology)

MANAGEMENT INFORMATION SYSTEMS & DATA SCIENCE

(2019 Pattern) (Semester-VIII) (Elective-VI) (408289 B)

Time : 2½ Hours] *[Max. Marks : 70*

Instructions to the candidates:

1) ***Answer Q.1 or Q.2, Q.3 or Q.4, Q.5 or Q.6, Q.7 or Q.8.***
2) ***Figures to the right indicate full marks.***
3) ***Assume suitable data if necessary.***
4) ***Neat diagrams must be drawn wherever necessary.***
5) ***Use electronic pocket calculator is allowed.***

Q1) Explain the term 'Decision'. Types of decisions and the decision making process in detail with suitable example. **[17]**

OR

Q2) Explain the types of decisions taken by different levels of management with suitable examples. Also explain programmed and unprogrammed types of decisions with suitable examples. **[17]**

Q3) Explain the types of activities or transactions of various functional departments of the organization. And how MIS helps in this process with suitable examples. **[18]**

OR

Q4) Explain with suitable examples various techniques used in data as well as information security in E-commerce business. **[18]**

P.T.O.

Q5) Explain the various types of reports of MIS with suitable examples. **[17]**

OR

Q6) Explain the classification of 'Accounting' along with their roles and responsibilities in brief. **[17]**

Q7) Explain the term 'Fixed cost' and 'Variable cost' with suitable example of printing field. **[18]**

OR

Q8) Explain in detail 'Standard cost' and 'Estimate' with suitable examples and also explain the importance of standard cost. **[18]**

● ● ●

Total No. of Questions : 8] **SEAT No. :**

PB-2411

[Total No. of Pages : 3

[6263]-263
B.E. (Production)
Automation and Control Engineering
(Semester - VII) (2019 Pattern) (411081)

Time : 2½ Hours] ***[Max. Marks : 70***

Instructions to the candidates:

1) ***Neat diagrams must be drawn wherever necessary.***
2) ***Figures to the right side indicate full marks.***
3) ***Use of Calculator is allowed.***
4) ***Assume Suitable data if necessary.***

Q1) a) Draw the suitable pneumatic circuit using cascade system to actuate cylinder A, cylinder B and cylinder C as per following position step diagram. **[10]**

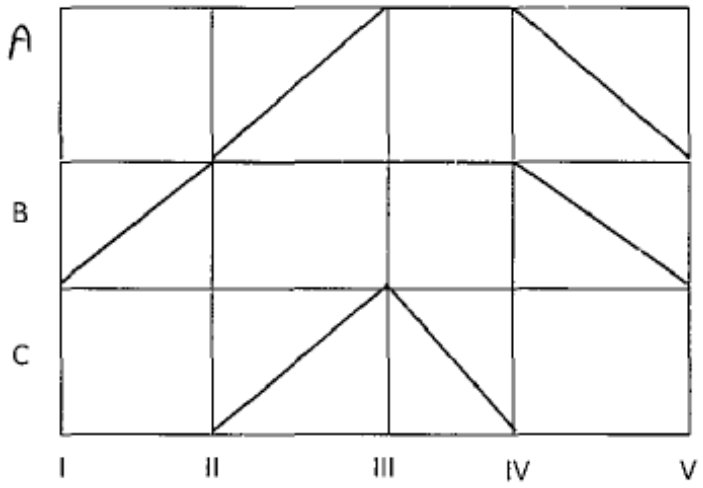

b) Draw a pneumatic circuit for a machine operated either by manual switch or automatic switch and to ensure that the workpiece is properly clamped and door of the machine is not open. **[8]**

OR

P.T.O.

Q2) a) Draw neat sketches of the following types of valves used in pneumatic circuits: **[8]**

4/2-seat type direction control valve.

5/2 spool type direction control valve

Quick exhaust valve

Time delay valve

b) Explain fluidic 'NOR/OR' and 'AND/NAND' gates with suitable sketch. Hence draw a suitable pneumatic circuit for a clamping device for a drilling machine such that the clamps are activated before drill is fed to the work. **[6]**

c) Explain with neat sketch the working of Shuttle valve. **[4]**

Q3) a) Explain Microprocessor-8085 with pin diagram. **[9]**

b) Write a program to clear the accumulator, add 27H, subtract 45H, add 6CH, display the result at output port. **[8]**

OR

Q4) a) Explain clearly the difference between microprocessor and microcontroller. **[8]**

b) Write the microprocessor program to perform following functions: **[9]**

Load the number 2FH in register C

Load the number C7H in register D

Increment the content of register D by one

Add the content of register C and D and display the sum at port 1.

Q5) a) A cylinder is used for washing components. Draw and explain the ladder diagram to perform the following sequence of operation for washing a batch of components: **[9]**

i) Cylinder extends

` ii) Cylinder remains in extended position for 30 sec.

iii) Cylinder retracts

The above sequence repeats for 50 cycles and the operation gets completed.

b) Explain following terms related to transient response of a control system: **[8]**

1) Rise time
2) Overshoot
3) Settling time
4) Steady state error

OR

Q6) a) Prepare a programmed ladder diagram to perform following sequence of operation. **[9]**

i) Fill the tank.
ii) Heat and stir the liquid at 100 for 20 min with timer tick 2 seconds.
iii) Empty the tank
iv) Repeat from step (i)

b) Obtain the controller output of a Derivative controller and proportional controller for a process having transfer function $\frac{2}{x+4}$ for step response of 4. Feedback transfer function is the gain of 0.1 and proportional gain $K=3$. **[8]**

Q7) a) What are the selection criteria of remote terminal unit? **[9]**

b) Explain the building blocks of human machine interface. **[9]**

OR

Q8) Write short notes on: **[18]**

i) Supervisory control and data acquisition (SCADA)
ii) Distributed control system
iii) Digital communication unit

Total No. of Questions : 8]

SEAT No. :

PB2412

[Total No. of Pages : 3

[6263]-264

B.E. (Production Engineering)

OPERATIONS RESEARCH

(2019 Pattern) (Semester - VII) (411082)

Time : 2½ Hours] *[Max. Marks : 70*

Instructions to the candidates:

1) ***Answer Q1 or Q2, Q3 or Q4, Q5 or Q6, Q7 or Q8.***
2) ***Neat diagrams must be drawn wherever necessary.***
3) ***Assume suitable data if necessary.***
4) ***Use graph paper for graphical solution.***

Q1) a) Describe the procedure of Integer programming with suitable illustration. **[8]**

b) Discuss applications of dynamic programming. **[9]**

OR

Q2) a) What is Geometric and Goal programming? Distinguish between Geometric and Goal programming. **[7]**

b) Explain the following with suitable example **[10]**

i) Branch & Bound method

ii) Cutting Plane method

Q3) a) Explain the theory of replacement used in when maintenance cost varies with time. **[5]**

b) A firm is considering replacement of a machine, whose cost price is Rs. 1,20,000, and the scrap value is Rs. 20,000. The running (maintenance and operating) costs of the machine are as follows. When should the machine be replaced? **[12]**

Year :	1	2	3	4	5	6	7	8
Running cost Rs.:	2000	5000	8000	12000	18000	25000	32000	40000

OR

P.T.O.

Q4) a) A firm has obtained ac contract to supply the goods produced by the machine for a period of 5 years from Now. After this time period the firm does not intend to use the machine. If the firm has a machine of this type which is one year old. What replacement policy should it adopt if it intends to replace the machine not more than once. Given initial cost of machine, Rs. 1,00,000. **[12]**

Year :	1	2	3	4	5	6
Running cost Rs.:	7500	8500	10000	12500	17500	27500
Resale value Rs.:	85000	76500	70000	60000	40000	15000

b) Describe the types of sudden Failures. **[5]**

Q5) a) The pay off of different strategies against conditions (events) shown in following table. **[12]**

Which strategy should the concerned executive will choose on the basis of

i) MaxiMax criteria or criteria of optimism

ii) MaxiMin criteria or criteria of Pessimistic[Wald Criteria]

iii) MiniMax Regret criteria or Savage Criteria

	Status of Nature		
Strategies	N1	N2	N3
S1	700000	500000	150000
S2	500000	450000	0
S3	300000	300000	300000

b) Describe the following with illustration **[6]**

i) Laplace criteria

ii) Hurwicz criteria or criteria of Realism

OR

Q6) a) The pay off of different strategies against conditions (events)shown in following table. **[8]**

Which strategy should the concerned executive will choose on the basis of

i) Hurwicz criteria or criteria of Realism [alfa=0.6]

ii) Laplace criteria or Criteria of Rationality

	Status of Nature		
Strategies	N1	N2	N3
S1	700000	500000	150000
S2	500000	450000	0
S3	300000	300000	300000

b) In a game of matching coins between player A and player B, player A wins Rs.2 if there are two heads and wins nothing if there two tails and loses Rs. 1 when there is one head and one tail. Determine a payoff matrix, best strategies for each player, and find the game value **[10]**

Q7) a) Describe Multi server queuing model and state the applications. **[6]**

b) In a bank 45 customers arrives on an average after every 7.5 minutes for withdrawing the cash. On an average the cashier at the payment counter takes 7.5minutes to serve 50 customers. **[12]**

Calculate:

i) Arrival rate and service rate

ii) Average number of customers in the bank(in the system)

iii) Average number of customers in the queue or average queue length

iv) Average time of a customer spends in the system

v) Average waiting time of a customer in the queue before service

OR

Q8) a) Describe Monte Carlo Simulation. **[8]**

b) Describe dynamic queue disciplines/rules. **[10]**



Total No. of Questions : 8]

SEAT No. : ____

PB-2413

[Total No. of Pages : 2

[6263]-265

B.E. (Production Engineering)

SIMULATION, MODELING AND DIGITAL TWIN

(2019 Pattern) (Semester - VII) (411083A) (Elective - III)

Time : 2½ Hours] ***[Max. Marks : 70***

Instructions to the candidates:

1) ***Answer Q1 or Q2, Q3or Q4, Q5 or Q6, Q7 or Q8.***
2) ***Neat diagrams must be drawn wherever necessary.***
3) ***Assume suitable data if necessary.***
4) ***Use of Non-programmable scientific calculators is allowed.***
5) ***Figures to the right indicate full marks.***

Q1) a) Write short notes on : **[8]**

i) Accreditation of Models Confidence Intervals

ii) Hypothesis Testing

b) Describe the creation of the simulation models using an example. **[9]**

OR

Q2) a) Briefly discuss simulation run statistics. **[8]**

b) Describe how the simulation models are verified and validated using appropriate examples. **[9]**

Q3) a) What are the essential conditions for applying digital twin to various industries? **[9]**

b) What kinds of tools and methods are employed in industries to enable the utilisation of digital twins? **[9]**

OR

Q4) a) Explain DTT role in industry innovation. Illustrate with suitable example. **[9]**

b) Describe the use of digital twins in product-based sectors with an appropriate example. **[9]**

P.T.O.

Q5) a) Briefly describe the process industry's operations and current developments. **[8]**

b) Write short note on : **[9]**

i) Automation Simulation

ii) Digital enterprise

OR

Q6) a) Write short note on data collection and analysis for improvement of process. **[8]**

b) Provide a brief overview of a plant's digital twin. **[9]**

Q7) a) Describe how the use of a digital twin may be used to enhance the production process. **[9]**

b) How can using a digital twin provide for greater production flexibility? **[9]**

OR

Q8) a) Write short note on continuous prediction and tuning of production process through Simulation. **[9]**

b) How may efficiency be increased by the discovery of bottlenecks? Give a relevant example. **[9]**

⌘⌘⌘

Total No. of Questions : 8]

SEAT No. :

PB-2414

[Total No. of Pages : 2

[6263]-266

B.E. (Production Engineering)

TOTAL QUALITY MANAGEMENT

(2019 Pattern) (Semester - VII) (411083B) (Elective - III)

Time : 2½ Hours] *[Max. Marks : 70*

Instructions to the candidates:

1) ***Solve Q.1 or Q.2, Q.3 or Q.4, Q.5 or Q.6, Q.7 or Q.8.***
2) ***Neat diagrams must be drawn wherever necessary.***
3) ***Figures to the right side indicate full marks.***
4) ***Use of Calculator is allowed.***
5) ***Assume Suitable data if necessary.***

Q1) a) Explain code of conduct for Benchmarking. **[9]**

b) Discuss advantages and limitations in Benchmarking Quality. **[9]**

OR

Q2) a) Explain Stages of FMEA in detail. **[9]**

b) What are the types of Benchmarking? **[9]**

Q3) a) Describe concept of maintainability and availability in detail. **[9]**

b) Describe BathTub curve with suitable sketch. **[8]**

OR

Q4) a) Explain Weibull Distribution with suitable sketch. **[9]**

b) Explain concept of MTBF and MTTF in reliability. **[8]**

Q5) a) Discuss various teams used for TQM. **[9]**

b) How to organize for creating change for quality? **[9]**

OR

Q6) a) How to evaluate an organization for quality? **[9]**

b) What are the requirements for quality coordination of quality activities? **[9]**

P.T.O.

Q7) a) Discuss the benefits of EMS. **[9]**

b) Discuss ISO documentation. **[8]**

OR

Q8) a) Discuss ISO / TS16949:2002 for Automobile Industry. **[8]**

b) What are the requirements of ISOl400l? **[9]**

⌘⌘⌘

Total No. of Questions : 8]

SEAT No. : ____

PB-2415

[Total No. of Pages : 2

[6263]-267

B.E. (Production Engineering)

ARTIFICIAL INTELLIGENCE IN MANUFACTURING

(2019 Pattern) (Semester - VII) (411083C) (Elective - III)

Time : 2½ Hours] ***[Max. Marks : 70***

Instructions to the candidates:

1) ***Solve Q.1 or Q.2, Q.3 or Q.4, Q.5 or Q.6, Q.7 or Q.8.***
2) ***Neat diagrams must be drawn wherever necessary.***
3) ***Figures to the right side indicate full marks.***
4) ***Use of logarithmic table, slide rule & Electronic pocket Calculator is allowed.***
5) ***Assume Suitable data if necessary.***

Q1) a) Explain the Building-Block Hypothesis of a binary coded GA. **[10]**

b) Can you declare GA as global optimizer? Explain it. **[8]**

OR

Q2) a) State the advantages and disadvantages of GA. **[10]**

b) Explain the Application of GA in Optimization Problems. **[8]**

Q3) a) What is a neural network?How artificial neural networks work? **[10]**

b) What are the types of back propagation? Explain in brief. **[8]**

OR

Q4) a) What is back propagation neural networks explain its architecture? **[10]**

b) What is Adaptive Resonance Theory network? Explain **[8]**

Q5) a) How is AI used in the manufacturing industry? **[10]**

b) What are the six steps in the monitoring procedure? Explain in brief. **[7]**

OR

Q6) a) Explain AI in design and manufacturing. **[10]**

b) What is machine vision in manufacturing? Explain in brief. **[7]**

P.T.O.

Q7) a) Explain the role of Artificial Intelligence in warehouse management. **[10]**

b) How is AI used in inventory management? **[7]**

OR

Q8) a) What is AI visual inspection? **[10]**

b) How AI is used for appropriate cutting tool selection? **[7]**

⌘⌘⌘

Total No. of Questions : 8]

SEAT No. :

PB-2416

[Total No. of Pages : 2

[6263]-268

B.E. (Production Engineering)

WORLD CLASS MANUFACTURING

(2019 Pattern) (Semester - VII) (411083D) (Elective - III)

Time : 2½ Hours] *[Max. Marks : 70*

Instructions to the candidates:

1) ***Solve Q.1 or Q.2, Q.3 or Q.4, Q.5 or Q.6, Q.7 or Q.8.***
2) ***Neat diagrams must be drawn wherever necessary.***
3) ***Figures to the right side indicate full marks.***
4) ***Assume Suitable data if necessary.***

Q1) a) Explain Computer Aided Process Planning used as Information tool in WCM. **[6]**

b) List various steps in Purchase cycle. **[6]**

c) Which are the Maintenance Stages? **[5]**

OR

Q2) a) Explain Rapid Prototyping used as Material Processing & Handling tool in WCM. **[6]**

b) Explain various types of Stores. **[6]**

c) Which are six big losses in TPM? **[5]**

Q3) a) What is Statistical Quality Control? **[6]**

b) Explain 3M with example. **[6]**

c) Discuss Poka-Yoke with example. **[6]**

OR

Q4) a) What is Rapid Prototyping as a Product development tool? **[6]**

b) What is Spaghetti Chart used for? Explain. **[6]**

c) What is Product Mix? Explain. **[6]**

P.T.O.

Q5) a) Discuss organization structure of any world class organization. **[8]**

b) Explain various motivation techniques. **[9]**

OR

Q6) a) Define Organizational Learning. Explain characteristics of Learning Organization. **[8]**

b) Discuss how root cause analysis techniques are used in WCM? **[9]**

Q7) a) Discuss effect of Green Manufacturing. **[9]**

b) Write Short Note on Clean Manufacturing. **[9]**

OR

Q8) a) Write short note on Agile Manufacturing. **[9]**

b) Discuss a case study related to WCM of any organization. **[9]**

⌘⌘⌘

Total No. of Questions : 8]

SEAT No. :

PB2417

[Total No. of Pages : 2

[6263]-269

B.E. (Production Engineering)

PLANT MAINTENANCE AND INDUSTRIAL SAFETY

(2019 Pattern) (Semester - VII) (411084(A)) (Elective - IV)

Time : 2½ Hours] *[Max. Marks : 70*

Instructions to the candidates:

1) ***Solve Q.1 or Q.2, Q.3 or Q.4, Q.5 ro Q.6 Q.7 ro Q.8.***
2) ***Neat diagrams must be drawn wherever necessary.***
3) ***Figures to the right indicate full marks.***
4) ***Assume suitable data, if necessary.***
5) ***Use of logarithmic tables, slide rules, Mollier charts, electronic pocket calculator and steam table is allowed.***

Q1) a) What are the benefits of conditions monitoring? **[5]**

b) What is condition monitoring and equipment health monitoring? **[6]**

c) Explain the wear debris analysis. **[6]**

OR

Q2) a) List the vibration measuring instruments and explain any one in detail. **[7]**

b) Discuss the various types of wear. **[10]**

Q3) a) Write a note on 'World Safety Organization'. **[8]**

b) Describe roll of management in Industrial safety. **[10]**

OR

Q4) a) Explain safety committees and its structure. **[8]**

b) Explain the history and development of Industrial safety. **[10]**

Q5) a) Discuss various causes of accidents in industrial plant. **[7]**

b) What is personal protective equipment? Explain different PPE used for different purpose and an importance of PPE. **[10]**

OR

P.T.O.

Q6) a) Explain following terms : **[7]**

i) Housekeeping

ii) First AID

b) Explain the various fire fighting equipments. **[10]**

Q7) a) Discuss salient features of Factory Act, 1948. **[8]**

b) What do you mean by occupational diseases? Discuss occupational diseases caused due to physical condition and respiration in dusty environment. **[10]**

OR

Q8) a) Explain the codes and regulations for workers safety and health. **[8]**

b) Describe the engineering methods of controlling chemical hazards. **[10]**



Total No. of Questions : 8]

SEAT No. :

PB2418

[Total No. of Pages : 2

[6263]-270
B.E. (Production Engineering)
SURFACE ENGINEERING
(2019 Pattern) (Semester - VII) (Elective - IV) (411084(B))

Time : 2½ Hours] *[Max. Marks : 70*

Instructions to the candidates:

1) ***Solve Q.1 or Q.2, Q.3 or Q.4, Q.5 ro Q.6 Q.7 ro Q.8.***
2) ***Neat diagrams must be drawn wherever necessary.***
3) ***Figures to the right indicate full marks.***
4) ***Assume suitable data, if necessary.***

Q1) a) Which are the different metal cladding processes? Explain any one. **[10]**

b) Describe any one carburizing process. **[8]**

OR

Q2) a) Which are thermal spray coating processes? Explain HVOF (High Velocity Oxy-Fuel Spraying). **[10]**

b) State the advantages and applications of diffusion coating processes. **[8]**

Q3) a) Describe chemical vapor deposition process with its advantages. **[10]**

b) Which are surface engineering problems related to substrate characteristics. **[8]**

OR

Q4) a) Explain any Plasma-based surface engineering processes for wear and corrosion protection. **[10]**

b) Which are the advantages of ion implantation? **[8]**

Q5) a) Describe measurement of Thickness of coatings and films by indentaion method. **[10]**

b) Explain magnetic particle testing of surface defects. **[7]**

OR

P.T.O.

Q6) a) What is Adhesion Testing? Why test Adhesion? **[10]**

b) Which are the different destructive testing methods of modified surfaces? Explain any one. **[7]**

Q7) a) Describe X-ray Photoelectron Spectroscopy (XPS) to analyze the surface morphology of nanomaterials? **[10]**

b) Write note on simulation of actual application environment in tribometer. **[7]**

OR

Q8) a) Describe the use of Laser in Surface Engineering. **[10]**

b) Which paints and coatings that address Environmental Issues? Discuss. **[7]**



Total No. of Questions : 8]

SEAT No. :

PB2419

[Total No. of Pages : 2

[6263]-271
B.E. (Production Engineering)
REVERSE ENGINEERING
(2019 Pattern) (Semester - VII) (Elective - IV) (411084C)

Time : 2½ Hours] *[Max. Marks : 70*

Instructions to the candidates:

1) ***Answer Q.1 or Q.2, Q.3 or Q.4, Q.5 ro Q.6 Q.7 ro Q.8.***
2) ***Neat diagrams must be drawn wherever necessary.***
3) ***Assume suitable data, if necessary.***
4) ***Use of non-programmable scientific calculator is allowed.***
5) ***Figures to the right indicate full marks.***

Q1) a) With suitable sketch, explain straightforward geometric triangulation to determine the surface coordinates of an object. **[8]**

b) What are the fundamentals of reverse engineering operations? Explain with suitable example. **[9]**

OR

Q2) a) Classify the softwares used for reverse engineering according to its intended use. **[8]**

b) Discuss about the benefits and drawbacks of the contact method used to get data for reverse engineering. **[9]**

Q3) a) What is the selection process for a reverse engineering system? Give appropriate example. **[9]**

b) Write short note on : **[9]**

i) Benchmarking

ii) Vendor and system information gathering

OR

Q4) a) Write a short note on Continuous analogue scanning probe. **[9]**

b) Explain issues involved in light-based approaches used in reverse engineering. **[9]**

P.T.O.

Q5) a) Discuss adaptive slicing approach. **[8]**

b) Discuss the construction of the remaining line segments for rapid prototyping. **[9]**

OR

Q6) a) Explain data processing used in reverse engineering with appropriate example. **[8]**

b) How the initial point is determined to start the construction of first segment? **[9]**

Q7) a) Explain briefly, how reverse engineering is used in the automobile industry using suitable examples. **[9]**

b) Reverse engineering changes the concept of traditional engineering. Discuss. **[9]**

OR

Q8) a) Use of reverse engineering principles in the aerospeace industry. **[9]**

b) What are the limitations of using reverse engineering techniques in the actual world? How it can be overcome? **[9]**

Total No. of Questions : 8]

SEAT No. :

PB2420

[Total No. of Pages : 3

[6263]-272

B.E. (Production Engineering)

ENTREPRENEURSHIP AND INNOVATIONS

(2019 Pattern) (Semester - VII) (411084D) (Elective - IV)

Time : 2½ Hours] *[Max. Marks : 70*

Instructions to the candidates:

1) ***Solve Q.1 or Q.2, Q.3 or Q.4, Q.5 or Q.6 Q.7 or Q.8.***
2) ***Neat diagrams must be drawn wherever necessary.***
3) ***Figures to the right indicate full marks.***
4) ***Use of electronic pocket calculator is allowed.***
5) ***Assume suitable data, if necessary.***

Q1) a) Write in brief about importance and need for entrepreneurship development. **[9]**

b) Which characteristics of small enterprises enable them to contribute to the economic development process in a developing country like India? Discuss. **[9]**

OR

Q2) a) What is family Business? Explain types of family Business with advantages and disadvantages. **[9]**

b) What are the strategies for entrepreneurship development? **[9]**

Q3) a) What are the different sources from which a project idea can be generated? **[8]**

b) What are the three processes performed in project accounting? **[9]**

OR

P.T.O.

Q4) a) **[9]**

Liabilities	Rs.	Assets	Rs.
Equity share capital	10,000	Fixed assets (less depreciation Rs. 10,000)	26,000
7% preference share capital	2,000	Current assets :	
Reserves and surplus	8,000		
6% mortgage debentures	14,000	Cash	1,000
Current liabilities :		Investments (10%)	3,000
Creditors	1,200	Sundry debtors	4,000
Bills payable	2,000	Stock	6,000
Outstanding expenses	200		
Tax provision	2,600		
	40,000		40,000

From the following balance sheet of Mr. Arvind Industries Ltd., as 31st March 2022.

Other information :

i) Net sales Rs. 60,000

ii) Cost of goods sold Rs. 51,600

iii) Net income before tax Rs. 4,000

iv) Net income after tax Rs. 2,000

Calculate :

1) Interest coverage ratio

2) Debtors turnover ratio

3) Gross profit ratio

b) What is involved in project accounting? **[8]**

Q5) a) What are the five stages of project control? **[8]**

b) What is the relationship between project planning and project control? **[9]**

OR

Q6) a) Why are planning performance and control important in the execution of projects? **[8]**

b) What are the 7 C's of project management? **[9]**

Q7) a) What are the legal issues related to product development and entrepreneurship? **[9]**

b) What are the type keys to successful partnerships? **[9]**

OR

Q8) a) What are the stages of partnership? **[9]**

b) What are the characteristics elements of partnership? **[9]**



Total No. of Questions : 8]

SEAT No. : ____

PB-2421

[Total No. of Pages : 3

[6263]-273
B.E.(Production)
COMPUTER INTEGRATED DESIGN AND MANUFACTURING
(2019 Pattern) (Semester - VIII) (411088-A)

Time : 2½ Hours] ***[Max. Marks : 70***

Instructions to the candidates:

1) ***Answer Q1 or Q2, Q3 or Q4, Q5 or Q6, Q7 or Q8.***
2) ***Neat diagrams must be drawn wherever necessary.***
3) ***Figures to the right side indicate full marks.***
4) ***Assume suitable data if necessary.***

Q1) a) Explain with neat sketch stereolithography RP method. **[10]**

b) What is MRP - I? Explain different input and output reports of MRP-I. **[7]**

OR

Q2) a) Explain the three phases in a shop floor control system. **[9]**

b) In CIM database comprise four classes of data : **[8]**

i) Product data
ii) Manufacturing data
iii) Operational data
iv) Resource data. Explain it.

Q3) a) Draw neat sketches for CNC and DNC. State the distinct features of its. **[6]**

b) Write a CNC program in G and M code to turn a part as shown in fig No. 1. Also write a remark for each block. **[12]**

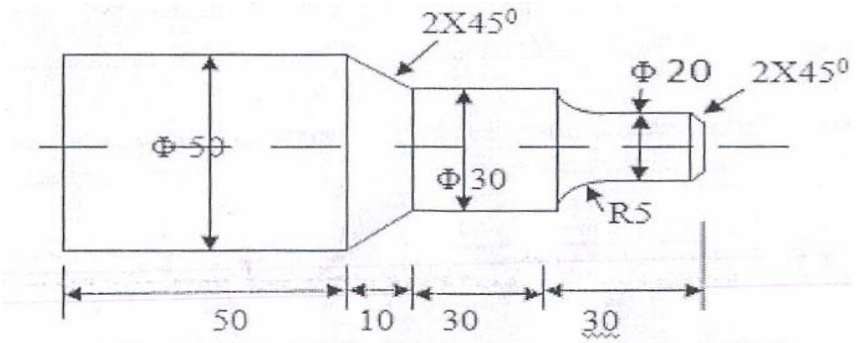

Fig.No.1 (All dimension are in MM)

OR

Q4) a) Write the meaning of following G and M code G01, G02, G91, M00, M03, M30 **[6]**

b) Write a CNC program using G and M codes for tapping four holes as shown in the Fig No.2, use canned drilling and tapping cycle. **[12]**

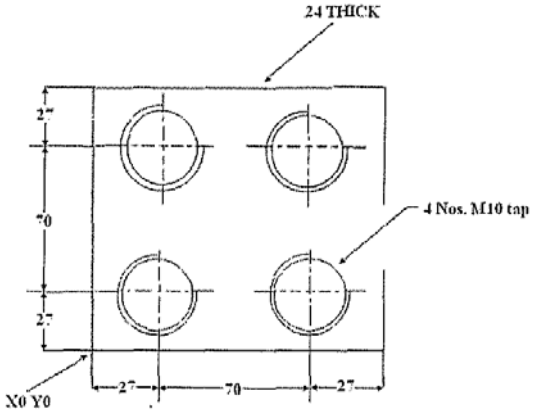

Fig. No. 2 (All dimension are in MM)

Q5) a) Fig. No. 3 shows three springs, having stiffness 20, 15 and 25 N/mm, connected in parallel. One end of the assembly is fixed, and a force of 600 N is applied at the other end. Determine the deflections of individual spring **[12]**

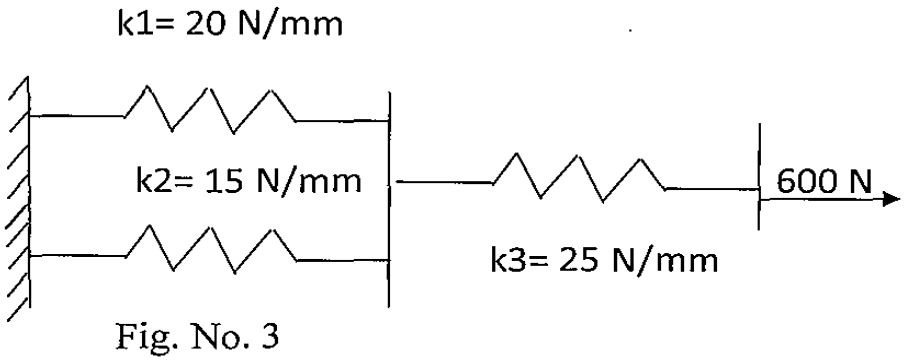

Fig. No. 3

b) Derive a relation between local coordinate and global coordinate system for truss element. **[6]**

OR

Q6) a) Fig.No.4 shows truss consisting of three elements whose AE/L value is 1000 N/mm. calculate the deflection at node 2 **[12]**

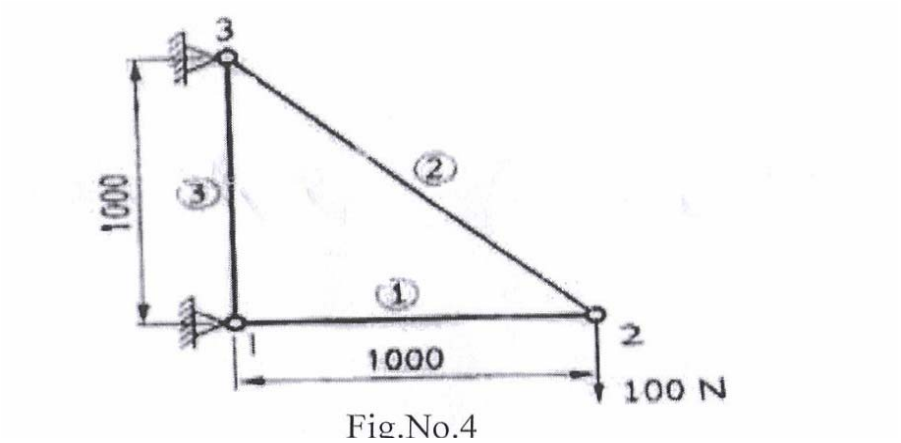

Fig.No.4

b) With neat sketch write Matrix analysis for force, load and displacement of 1-dimensional single rod element. **[6]**

Q7) a) What is Flexible Manufacturing System (FMS)? Explain the classification on level of flexibility. **[8]**

b) Consider the following part machine matrix. Apply Rank Order Clustering (ROC) Algorithm to identify the part families and machine groups. **[9]**

Parts

Machines ⇩	A	B	C	D	E	F	G
1	0	1	0	1	1	1	0
2	1	0	1	0	0	0	0
3	1	0	1	0	0	1	1
4	0	1	0	1	0	1	0
5	1	0	0	0	1	0	1

OR

Q8) a) Explain different layouts in FMS. **[9]**

b) Explain monocode and ploy code system for coding the parts in GT. **[8]**

☺☺☺

Total No. of Questions : 8]

SEAT No. :

PB2422

[Total No. of Pages :3

[6263]-274
B.E. (Production Engineering)
INDUSTRIAL ROBOTICS
(2019 Pattern) (Semester-VIII) (411089)

Time : 2½ Hours] *[Max. Marks : 70*

Instructions to the candidates:

1) ***Neat diagrams must be drawn wherever necessary.***
2) ***Use of electronic pocket calculator is allowed.***
3) ***Assume suitable data, if necessary.***

Q1) a) Explain the link tensor of a manipulator. **[9]**

b) It is desired to have the first joint of a six axis robot go from initial angle of 40° to a final angle of 45° in 5 seconds. Using a third order polynominal, calculate the joint angle at 1,2,3 and 4 seconds. **[9]**

OR

Q2) a) Discuss the force or vector based approach in dynamic analysis. **[9]**

b) It is desired to have the first joint of a six axis robot go from initial angle of 20° to a final angle of 65° in 6 seconds. Using a third order polynominal, calculate the joint angle at 1,2,3 and 4 seconds. **[9]**

Q3) a) With neat block diagram explain machine vision system and steps in image processing and analysis. **[8]**

b) Write short note on:

i) Optical encoder

ii) Ultrasonic proximity Sensors

iii) Force sensors **[9]**

OR

P.T.O.

Q4) a) Give detail classification of sensors and its characteristics. **[8]**

b) The 8×8 array of pixels indicating each element as the gray level of pixel is given below. **[9]**

i) Construct the histogram and find threshold value.

ii) Convert it into black and white image.

iii) Perform shape analysis (first and second order moments, centroids, run length encoding, principal angle)

12	11	13	13	13	11	13	13
10	13	10	15	15	15	14	11
9	13	14	16	16	15	15	14
8	13	14	16	17	15	15	14
9	11	15	15	15	15	15	9
7	14	14	14	14	14	14	14
8	7	6	10	12	12	8	8
6	7	8	9	10	11	12	13

Q5) a) What are the main differences between 2D and 3D coordinate systems in defining positions in space? **[8]**

b) Explain the factors to be consider while choosing between offline programming and online programming for a robot **[9]**

OR

Q6) a) Explain Lead through programming method. **[8]**

b) Explain Counter Path Defining using ‘via’ point, blending Technique. **[9]**

Q7) Write short note on: **[18]**

a) Biped robots

b) AI & Robotics

c) Robotic assembly line

d) Fuzzy logic

OR

Q8) Write short note on: **[18]**

a) Walking robots

b) Concept of AI

c) Machine mounted robots

d) Assembly and mega assembly robots

Total No. of Questions : 8]

SEAT No. :

PB-2423

[Total No. of Pages : 2

[6263]-275

B.E. (Production Engineering)

E-MOBILITY IN AUTOMOBILE

(2019 Pattern) (Semester - VIII) (Elective - V) (411090(A))

Time : 2½ Hours] *[Max. Marks : 70*

Instructions to the candidates:

1) ***Solve Q.1 or Q.2, Q.3 or Q.4, Q.5 or Q.6, Q.7or Q.8.***
2) ***Figure to the right indicates full marks.***
3) ***Neat Diagram must be drawn wherever necessary.***
4) ***Assume Suitable data if necessary.***
5) ***Use of Logarithmic Table, Slide rule is Electronic pocket calculator is allowed.***

Q1) a) Elaborate BLDC motor in detail. **[9]**

b) Classify electric drive system with neat sketches. **[8]**

OR

Q2) a) Enlist applications of EV Drives. Explain any two applications in detail. **[9]**

b) Write short notes on the following. (any two) **[8]**

i) Modern requirements of EV Drives.

ii) PMSM Motor

iii) Industrial Motors and EV Motors

Q3) a) Enlist requirements to preven fire for EVs charging station. **[9]**

b) Brief on Solar Power Electric Vehicle. **[8]**

OR

Q4) a) Classify energy sources used in EVs and HEVs. **[9]**

b) Write a note on Battery Management System. **[8]**

P.T.O.

Q5) a) Explain various components of EV System. **[9]**

b) Brief on converted and built EVS. **[9]**

OR

Q6) a) Discuss various methods for EV Communication. **[9]**

b) Differentiate between V2V and V2G. **[9]**

Q7) a) Describe various Government Norms for EVs. **[9]**

b) Elaborate Fuel Cell for APU Applications. **[9]**

OR

Q8) a) Explain briefly strategies for propulsion control motor. **[9]**

b) Why study of power electronics is essential? Elaborate it. **[9]**

Total No. of Questions : 8]

SEAT No. :

PB-2424

[Total No. of Pages : 2

[6263]-276

B.E. (Production Engineering)

SMART MANUFACTURING

(2019 Pattern) (Semester - VIII) (Elective - V) (411090(B))

Time : 2½ Hours] *[Max. Marks : 70*

Instructions to the candidates:

1) ***Solve Q.1 or Q.2, Q.3 or Q.4, Q.5 or Q.6 and Q.7or Q.8.***
2) ***Figure to the right indicates full marks.***

Q1) a) What is software connectivity in smart manufacturing? **[6]**

b) What is data contextualization in smart manufacturing? **[6]**

c) Which four steps are required for building a digital twin and performing predictive analytics? **[5]**

OR

Q2) a) Which are the challenges that can be addressed by effective data analysis? **[6]**

b) What is hardware requirement in smart manufacturing? **[6]**

c) Explain modern connectivity for manufacturing equipment in smart manufacturing. **[5]**

Q3) a) Which are the benefits of Data analysis in process modeling? **[6]**

b) Explain data technologies of industry 4.0. **[6]**

c) Which are the challenges of Industrial AI and predictive analytics for smart manufacturing systems? **[5]**

OR

Q4) a) Explain data-based design of experiments. **[6]**

b) Describe going on-line in process modeling. **[6]**

c) Explain operations technologies of industry 4.0. **[5]**

P.T.O.

Q5) a) Explain Multiparametric programming and closed-loop validation. **[6]**

b) What is Asset autonomy in smart manufacturing? **[6]**

c) Write note on Smart manufacturing concepts. **[6]**

OR

Q6) a) Explain PAROC in smart manufacturing. **[6]**

b) Which are the multidisciplinary system design optimization approaches? **[6]**

c) Explain High-fidelity dynamic modeling and model approximation. **[6]**

Q7) a) Explain Smart Manufacturing as data-enabled sustainable manufacturing. **[6]**

b) Describe Support vector machines as data driven sensor. **[6]**

c) Which are the Characteristics of process data? Explain in brief. **[6]**

OR

Q8) a) Explain PLS in process monitoring and part of soft sensor technology. **[6]**

b) Describe use of Artificial neural networks for soft sensor building. **[6]**

c) Describe use of PLS in soft sensing. **[6]**



Total No. of Questions : 8]

SEAT No. : ____

PB-2425

[Total No. of Pages : 2

[6263]-277

B.E. (Production Engineering)

MANUFACTURING SYSTEM DESIGN

(2019 Pattern) (Semester - VIII) (Elective - V) (411090(III))

Time : 2½ Hours] ***[Max. Marks : 70***

Instructions to the candidates:

1) ***Solve Q.1 or Q.2, Q.3 or Q.4, Q.5 or Q.6 and Q.7or Q.8.***
2) ***Figures to the right indicate full marks.***

Q1) a) What are different steps followed in Task Allocation and Sequencing? **[8]**

b) What are different steps followed in designing a manufacturing system? **[8]**

c) Brief shortly about Hybrid Manufacturing System. **[3]**

OR

Q2) a) Write short note on Line Balancing. **[8]**

b) Write short note on fixturing. **[8]**

c) What is a Need of Manufacturing System? **[3]**

Q3) a) Write Advantage, Disadvantage And applications of FMS. **[8]**

b) Write Production Flow Analysis(PFA) in details. **[8]**

c) Write advantages and limitation of Group Technology. **[3]**

OR

Q4) a) What is Part Family? What are Benefits of part Families. **[8]**

b) What is Cellular Manufacturing? Write it's advantages and disadvantages. **[8]**

c) Mentioned Methods for Part Family Formation. **[3]**

P.T.O.

Q5) a) What are principles of Lean Production. **[8]**

b) Write short note on: **[8]**

i) Value stream Mapping

ii) JIT

OR

Q6) a) Write Short note On Zero Inventory. **[8]**

b) What is Opportunity cost? Explain. **[8]**

Q7) a) What are material selection parameter in process planning. **[8]**

b) What do you understand about Aggregate Production Planning? **[8]**

OR

Q8) a) What are different steps in Process planning? **[8]**

b) Which are the process plan activities? **[8]**

Total No. of Questions : 8]

SEAT No. :

PB-2426

[Total No. of Pages : 2

[6263]-278

B.E. (Production Engineering)

ERGONOMICS AND WORK MANAGEMENT

(2019 Pattern) (Semester - VIII) (411090D) (Elective - V)

Time : 2½ Hours] *[Max. Marks : 70*

Instructions to the candidates:

1) ***Answer Q1 or Q2, Q3 or Q4, Q5 or Q6, Q7 or Q8.***
2) ***Neat diagrams must be drawn wherever necessary.***
3) ***Assume suitable data if necessary.***
4) ***Use of Non-programmable scientific calculators is allowed.***
5) ***Figures to the right indicate full mark.***

Q1) a) What are the types and uses of anthropometry? **[9]**

b) Discuss Tactual and Olfactory display and controls. **[8]**

OR

Q2) a) What is design of work surface? Explain with example. **[9]**

b) Discuss the effect of following on human performance in work : **[8]**

i) Illumination

ii) Dust.

Q3) a) What are different types of productivity and also explain the ways to improve productivity. **[9]**

b) How human factors and ergonomics is addressed in design process? **[9]**

OR

Q4) a) Discuss working conditions and the working environment relevant to work study. **[9]**

b) Explain the techniques to reduce work content. **[9]**

P.T.O.

Q5) a) Explain the two-handed process chart. Give suitable example. **[9]**

b) Define Method study. Explain procedure of method study. **[8]**

OR

Q6) a) How the method study is implemented? Elaborate with appropriate example. **[9]**

b) Explain the multiple activity chart. How it is useful in method study? **[8]**

Q7) a) Explain the basic procedure of work measurement. Also explain the techniques of work measurement. **[9]**

b) What are different allowances and their types? Why it is useful? **[9]**

OR.

Q8) a) Discuss steps in making a time study. How this is useful in time study? **[9]**

b) What do you mean by Incentive? Explain objectives of an incentive plan. **[9]**

⌘⌘⌘

Total No. of Questions : 8]

SEAT No. :

PB2427

[Total No. of Pages : 2

[6263]-279

B.E. (Production Engineering)

FACILITY PLANNING

(2019 Pattern) (Semester-VIII) (Elective-VI) (411091-A)

Time : 2½ Hours] ***[Max. Marks : 70***

Instructions to the candidates:

1) ***Answer Q1 or Q2, Q3 or Q4, Q5 or Q6, Q7 or Q8.***
2) ***Neat diagrams must be drawn wherever necessary.***
3) ***Figures to the right indicate full marks.***
4) ***Assume suitable data if necessary.***

Q1) a) Explain Warehouse processes. **[8]**

b) Explain elements of FMS. Write advantages of FMS. **[9]**

OR

Q2) a) Explain following. **[9]**

i) Consolidation Warehouses,

ii) Cross-Docking Warehouses,

iii) Break-Bulk Warehouses.

b) Discuss the facility provided for reduction in WIP **[8]**

Q3) a) Discuss different factor consider by facility planner for better Structural System Performance. **[9]**

b) What is the purpose of a ventilation system? State the parts of an industrial ventilation system? **[9]**

OR

P.T.O.

Q4) a) Explain how Electrical and Lighting facility with different element used in industry. **[8]**

b) Why is safety in manufacturing important? Explain most common safety measures in manufacturing. **[10]**

Q5) a) State and explain which chart use by a company that handles heavy or awkward product or large quantities of materials or parts. **[12]**

b) Explain with suitable data a two-stage allocation model. **[6]**

OR

Q6) a) Explain the chart with suitable example for the flow of material measured quantitatively in terms of amount moved between departments. **[9]**

b) With the help of Storage Analysis Sheet, explain the method of storage space determination at a location in a plan. **[9]**

Q7) a) Compare ranking and weighted factor method for evaluating facility plans. **[9]**

b) Explain different phases for facility plan implementation. **[8]**

OR

Q8) a) How could computer-aided layout techniques be used to study flow patterns outside facility? **[8]**

b) Describe specific situations where two-dimensional layouts would be superior to three-dimensional layouts and vice versa. **[9]**

● ● ●

Total No. of Questions : 8]

SEAT No. :

PB2428

[Total No. of Pages : 2

[6263]-280

B.E. (Production Engineering)

ADDITIVE MANUFACTURING

(2019 Pattern) (Semester-VIII) (Elective-VI) (411091-B)

Time : 2½ Hours] *[Max. Marks : 70*

Instructions to the candidates:

1) ***Answer Q1 or Q2, Q3 or Q4, Q5 or Q6, Q7 or Q8.***
2) ***Neat diagrams must be drawn wherever necessary.***
3) ***Figures to the right indicate full marks.***
4) ***Assume suitable data if necessary.***

Q1) a) Explain Stereolithography principle, process, advantages and applications. **[9]**

b) What is Cubital's Solid Ground Curing (SGC)? Discuss it. **[8]**

OR

Q2) a) Discuss Meiko's Rapid Prototyping system for the jewelry industry. **[9]**

b) Explain Rapid Freeze Prototyping and Microfabrication. **[8]**

Q3) a) Explain principle, working of Fused Deposition Modeling with sketch. **[9]**

b) Describe with sketch Cubic Technologies Laminated Object Manufacturing. (LOM)? **[9]**

OR

Q4) a) What is Beijing Yinhua's Slicing Solid Manufacturing (SSM) and explain details. **[9]**

b) Explain 3D Multi-Jet Modelling System (MJM) with diagram. **[9]**

P.T.O.

Q5) a) Discuss Principal working, and application Selective Laser Sintering. **[9]**

b) Explain with sketch working Three Dimensional Printing. **[8]**

OR

Q6) a) What is Laser Engineered Net Shaping (LENS) and write application Laser Engineered Net Shaping. **[9]**

b) Explain Electron Beam Melting in detail. **[8]**

Q7) a) Outline Computer Aided Tissue Engineering (CATE). **[9]**

b) Write short note on application of Additive Manufacturing in following. **[9]**

i) Operation Planning for Cancerous Brain Tumor Surger.

ii) Knee Implants

OR

Q8) a) Discuss application of Additive Manufacturing in Scaffolds for Tissue Engineering and Cranium Implant. **[9]**

b) How Additive Manufacturing is used in Customized Tracheobronchial Stents and Inter-Vertebral Spacers. **[9]**

● ● ●

Total No. of Questions : 8]

SEAT No. : [ ]

PB2429

[Total No. of Pages : 2

[6263]-281

B.E. (Production Engineering)

RELIABILITY ENGINEERING

(2019 Pattern) (Semester-VIII) (411091 C) (Elective-VI)

Time : 2½ Hours] ***[Max. Marks : 70***

Instructions to the candidates:

1) ***Answer Q.1 or Q.2, Q.3 or Q.4, Q. 5 or Q. 6, Q. 7 or Q. 8.***
2) ***Neat diagrams must be drawn whenever necessary.***
3) ***Figures to the right indicate full marks.***
4) ***Assume suitable data, if necessary.***
5) ***Use of logarithmic tables, slide rules, mollier charts, electronic pocket calculator and steam table is allowed.***

Q1) a) Explain the term 'Availability' of 'Maintainability' with the help of suitable example. **[7]**

b) Define availability and maintainability for the system from the following data collected at a plant. **[10]**

Mean time before failure: 35Hrs.

Meant time to repair: 10 Hrs.

Administrative and logistic time: 50% of MTTR.

Calculate operational availability and inherent availability of the plant.

OR

Q2) a) What do you understand by "Operational availability" and " Inherent Availability"? Derive expression for these two. **[7]**

b) Explain in detail Reliability and Maintainability Trade-off. **[10]**

Q3) a) What is reliability allocation? Discuss the advantages of reliability allocation method. **[8]**

b) System requires a Reliability of 0.9 for 10 hours of operation. There are four units connected in series with their failure rates λ_1 =0.002, λ_2=0.003, λ_3=0.004 and λ_4=0.007. Allocated reliabilities to the four units. **[10]**

OR

P.T.O.

Q4) a) Explain Agree apportionment technique. **[8]**

b) A system of 3 components 1, 2 and 3 having failure rates λ_1=0.006, λ_2=0.004 and λ_3=0.001 per hour respectively. Assuming mission time of 20 hrs. and system reliability of 0.92. Find failure rates as well as reliability of each subsystem for entire mission period. **[10]**

Q5) a) Explain Ishikawa diagram for failure representation. **[7]**

b) What is meant by FMEA and FMECA? Explain the application of Risk Priority number (RPN) in FMECA with example. **[10]**

OR

Q6) a) For an emergency operation theatre in a hospital, the power is obtained form the main city supply through a transformer connected in series. To ensure an uniterrupted supply, an auxiliary generator is also used with a suitable switch over. Draw a block diagram and construct fault tree for the system. **[7]**

b) Discuss the method of obtaining criticality of a component or a subsystem using Risk priority Number (RPN). **[10]**

Q7) a) Differentiate between Highly Accelerated Life Testing (HALT) and Accelerated life testing (ALT). **[8]**

b) In a short sample "accelerated life testing" of a system based on weibull distribution the following data is record. **[10]**

Failure No.	1	2	3	4	5	6	7	8	9
MTTF (hrs)	24	22	12	28	35	38	30	19	25

Plot the variation of reliability against time using:

i) Mean ranking and

ii) Median ranking method.

OR

Q8) a) Explain in detail Highly Accelerated Life Testing (HALT). **[8]**

b) Explain briefly the various methods of assessing reliability of a component through accelerated tests. **[10]**

● ● ●

Total No. of Questions : 8]

SEAT No. : [ ]

PB2430

[Total No. of Pages : 2

[6263]-282

B.E. (Production Engineering)

DATA ANALYTICS

(2019 Pattern) (Semester-VIII) (Elective-VI) (411091D)

Time : 2½ Hours] ***[Max. Marks : 70***

Instructions to the candidates:

1) ***Answer Q1 or Q2, Q3 or Q4, Q5 or Q6, Q7 or Q8.***
2) ***Neat diagrams must be drawn wherever necessary.***
3) ***Figures to the right indicate full marks.***
4) ***Assume suitable data if necessary.***

Q1) a) Explain the purpose of using regression modelling in data analysis and what kind of inferences it provides. **[10]**

b) Compare Big Data with conventional data and indicate some of the importance of Big Data Analysis. **[8]**

OR

Q2) a) Why is predictive analytics important? **[10]**

b) Write a short note on clustering techniques and its applications. **[8]**

Q3) a) What are the three characteristics of Big Data, and what are the main consideration in processing big data? **[10]**

b) How to choose the correct data analysis techniques? **[8]**

OR

Q4) a) Describe the challenges of the current analytical architecture of data scientists. **[10]**

b) Compare which is better- Random Forest Vs Support Vector Machine.**[8]**

P.T.O.

Q5) a) What is prescriptive analytics? How it works? **[10]**

b) What is decision tree analysis? **[7]**

OR

Q6) a) What do you mean by principal component analysis? **[10]**

b) What is a Genetic algorithm? **[7]**

Q7) a) What is Reinforcement learning? **[10]**

b) What is Markov analysis? Explain with example. **[7]**

OR

Q8) a) What is Monte Carlo simulation? **[10]**

b) What is the type of Q-learning? **[7]**

● ● ●

Total No. of Questions : 8] **SEAT No. :**

PB-2431

[Total No. of Pages : 3

[6263]-283
B.E. (Production Sandwich Engineering)
Manufacturing Automation
(Semester - VII) (2019 Pattern) (411121)

Time : 2½ Hours] ***[Max. Marks : 70***

Instructions to the candidates:

1) ***Answer Q.1 or Q.2, Q.3 or Q.4, Q.5 or Q.6,Q.7 or Q.8.***
2) ***Neat diagrams must be drawn whenever necessary.***
3) ***Figures to the right indicate full marks.***
4) ***Assume suitable data, if necessary and mention it clearly.***
5) ***Use of non-programmable calculator is allowed.***

Q1) a) Draw pneumatic circuit for 3/2 push button DC valve by using single acting cylinder. **[5]**

b) Explain construction and working of solenoid valve type valve, factors to be considered for selecting solenoids? **[5]**

c) List seven basic elements used in Electro pneumatic circuits. List the advantages of electrical actuation of pneumatic. **[6]**

OR

Q2) a) Design and Testing of Pneumatic Circuit for Single Cycle Automation of Multi cylinders in the Sequence of A+ B+ B-A- **[5]**

b) Define Pneumatics. List advantages, disadvantages of pneumatics. What factors considered while selecting Components of Pneumatic System**[5]**

c) Comparison between Pneumatic, Electro Pneumatic. **[6]**

Q3) a) State any four important features of 8051 microcontroller. **[6]**

b) Compare data memory and program memory (4 Points). **[6]**

c) Differentiate between Harvard and Von-Neuman architecture (4 Points)**[6]**

P.T.O.

OR

Q4) a) Define automated Transfer Line Explain In-line - straight line arrangement of workstations, Segmented In-Line Configurations Rotary Indexing Type System Configurations. **[6]**

b) Explain the features and Applications of Material Handling / transport five categories of Equipment. **[6]**

c) Define AGV list Types of AGV. What are the components of AGV? What are the Benefits of AGV. Explain variety of areas to support processing and handling throughout a facility? **[6]**

Q5) a) List principal components of automatic identification technologies, List AIDC technologies six categories. List applications of AIDC technologies in production and distribution? **[6]**

b) Explain configuration of Manual assembly line technology difference between manual assembly line and mixed-model line advantages. **[6]**

c) Explain Features and operations of single-station manufacturing cells? Difference between single-station manned cell and single- station automated cell? **[6]**

OR

Q6) a) A rotary indexing table is driven by a five-slotted Geneva mechanism. The driver rotation is 50 revolutions per minute. Determine: **[6]**

1) The total cycle time of the indexing table
2) The available processing time for the indexing table

b) Define manufacturing system. Explain following manufacturing systems

1) single-station cells,
2) multistation systems with fixedrouting, and
3) multistation systems with variable routing Give Examples of Single-Station Manned and Automated Cells. **[6]**

c) Explain the following Powered conveyor mechanism used for transporting materials **[6]**

1) Roller
2) Skate - wheel
3) Belt
4) In- floor towline

Q7) a) Explain HCI to make the man and machine interaction more vibrant and interactive designingmodel in software engineering. **[6]**

b) Explain the Elements of Digital Communication Systems, Advantages, Disadvantages of digital communication, need for Pulse Modulation?**[6]**

c) Explain Basic Structure ,Types, Applications of Artificial Neural Networks. **[6]**

OR

Q8) a) Define of SCADA. What is SCADA? Explain the features and Applications of SCADA system, SCADA systems consisting. **[6]**

b) Define ANN, Explain Concept ,Fundamentals of (ANN) Essential neuron components, Explain architecture of Artificial Neural Networks. **[6]**

c) Define Human Computer Interface Introduction (HCI),In Which areas and where HCI can be implemented with distinctive importance. **[6]**

Total No. of Questions : 8]

SEAT No. : ____

PB2432

[Total No. of Pages : 3

[6263]-284

B.E. (Production Sandwich)

OPERATION RESEARCH

(2019 Pattern) (Semester - VII) (411122)

Time : 2½ Hours] ***[Max. Marks : 70***

Instructions to the candidates:

1) ***Answer Q1 or Q2, Q3 or Q4, Q5 or Q6, Q7 or Q8.***
2) ***Neat diagrams must be drawn wherever necessary.***
3) ***Figures to the right side indicate full marks.***
4) ***Use of Calculators is allowed.***
5) ***Assume Suitable data if necessary.***

Q1) a) Explain in brief Dynamic programming model. **[8]**

b) Describe Branch & Bound Method for the solution of integer programming problem. **[9]**

OR

Q2) a) What is Goal programming? State its assumptions. **[9]**

b) State the applications of Non linear programming. **[8]**

Q3) a) The cost of the machine is Rs. 6100/- and its scrap value is Rs. 100 at the end of every year. The Maintenance Costs found from experience are as follows : **[8]**

Year	1	2	3	4	5	6	7	8
Maintenance Cost (Rs.)	100	250	400	600	900	1200	1600	2000

When should the machine be replaced?

b) A machine A costs Rs.5000. Its maintenance cost is Rs. 1000 in each of the first four years and then increases by Rs. 200 every year. Assuming that the machine has no salvage value and the maintenance cost is incurred in the beginning of each year, determine the optimal replacement time for machine assuming that time value of money is 10% per year. **[10]**

OR

P.T.O.

Q4) a) A firm using a machine whose purchase cost is Rs. 13000 .The installation charges amount to Rs. 3600/- and the machine has scrap value of Rs. 1600 at the end of every year. The Maintenance Cost in various years are as given below : **[10]**

Year	1	2	3	4	5	6	7	8	9
Maintenance Cost (Rs.)	250	750	1000	1500	2100	2900	4000	4800	6000

Assuming that the machine replacement can be done only at the end of the year, determine after how many years should the machine be replaced on economic consideration?

b) Discuss different types of failure. **[8]**

Q5) a) Solve the following game by dominance and find the game value. **[10]**

	Player B				
Player A		I	II	III	IV
	I	3	2	4	0
	II	3	4	2	4
	III	4	2	4	0
	IV	0	4	0	8

b) Discuss different types of Decision making environments. **[8]**

OR

Q6) a) Solve the following game and find the game value. **[10]**

	Player B				
Player A		I	II	III	IV
	I	3	5	4	2
	II	5	6	2	4
	III	2	1	4	0
	IV	3	3	5	2

b) Explain various ingredients of a decision problem. **[8]**

Q7) a) Explain Why is simulation used? **[7]**

b) Workers come to tool store room to enquire about special tools (required by them) for accomplishing a particular project assigned to them. The average time between two arrivals is 60 seconds and the arrivals are assumed to be in Poisson distribution. The average service time (of the tool room attendant) is 40 seconds. **[10]**

Determine:

i) average queue length,

ii) average length of non-empty queues

iii) average number of workers in system including the worker being attended

iv) Mean waiting time of an arrival

v) average waiting time of an arrival who waits

OR

Q8) a) Write short on Monte Carlo Simulation. **[7]**

b) The automobile company manufactures around 150 scooters. The daily production varies from 146 to 154 depending upon the availability of raw materials and other working conditions: **[10]**

Production per day	146	147	148	149	150	151	152	153	154
Probability	0.04	0.09	0.12	0.14	0.11	0.10	0.20	0.12	0.08

The finished scooters are transported in a specially arranged lorry accommodating 150 scooters. Using the random numbers 80, 81, 76, 75, 64, 43, 18, 26, 10, 12, 65, 68, 69, 61, 57, simulate the process to find out:-

i) What will be the average number of scooters waiting in the factory?

ii) What will be the average number of empty space on the lorry?



Total No. of Questions : 8]

SEAT No. :

PB-2433

[Total No. of Pages : 2

[6263]-285

B.E. (Production Engineering) (Sandwich)

ADDITIVE MANUFACTURING

(2019 Pattern) (Semester - VII) (411123 A) (Elective - III)

Time : 2½ Hours] ***[Max. Marks : 70***

Instructions to the candidates :

1) ***Solve Q.1 or Q.2, Q.3 or Q.4, Q.5 or Q.6, Q.7 or Q.8.***
2) ***Figures to the right indicate full marks.***
3) ***Neat diagrams must be drawn wherever necessary.***
4) ***Assume suitable data, if necessary.***

Q1) a) What are the basic microfabrication techniques? What is the difference of microfabrication and nanotechnology? **[9]**

b) Elaborate on how rapid prototyping is transforming the jewellery industry. **[8]**

OR

Q2) a) What is Stereolithography Apparatus (SLA)? Write down its Principle, process, advantages and applications. **[9]**

b) What is rapid freeze prototyping? Explain in detail. **[8]**

Q3) a) What is Fused Deposition Modelling (FDM)? Write down its Principle, process, advantages and applications. **[9]**

b) What is Mimics software used for? Explain in detail. **[8]**

OR

Q4) a) With a neat diagram, explain Melted Extrusion Modelling (MEM). **[9]**

b) What is Selective Laser Sintering (SLS)? Write down its Principle, process, advantages and applications. **[8]**

P.T.O.

Q5) a) List out Solid Based Additive Manufacturing Systems and explain any one method in detail. **[9]**

b) What is Three Dimensional Printing? Write down its Principle, process, advantages and applications. **[9]**

OR

Q6) a) With neat sketch, explain Laser Engineered, Net Shaping (LENS). **[9]**

b) What is Selective Laser Sintering (SLS)? Write down its Principle, process, advantages and applications. **[9]**

Q7) a) Discuss with a cases study how design and production of medical devices are done by Additive Manufacturing. **[9]**

b) What is cranial implant? Explain in detail. **[9]**

OR

Q8) a) Categorize the applications of Additive Manufacturing in the areas of customized implants and prosthesis. **[9]**

b) Write short notes on Scaffolds for Tissue Engineering. **[9]**

▽▽▽▽

Total No. of Questions : 8]

SEAT No. :

PB-2434

[Total No. of Pages : 2

[6263]-286

B.E. (Production Sandwich Engineering)

INDUSTRIAL ROBOTICS

(2019 Pattern) (Semester - VII) (411123 B) (Elective - III)

Time : 2½ Hours] *[Max. Marks : 70*

Instructions to the candidates :

1) ***Solve Q.1 or Q.2, Q.3 or Q.4, Q.5 or Q.6, Q.7 or Q.8.***
2) ***Figures to the right indicate full marks.***
3) ***Neat diagrams must be drawn wherever necessary.***
4) ***Assume suitable data, if necessary.***
5) ***Use of Logarithmic Table, Slide rule & Electronic pocket calculator is allowed.***

Q1) a) Explain the working of slip sensor with neat sketch. **[9]**

b) Explain the working of potentiometer with application. **[9]**

OR

Q2) a) With neat sketch explain the working of following sensors in robots : **[9]**

i) Variable Pressure Light Converting Sensor

ii) Tactile Sensors

iii) Electro optical sensors

b) Explain any three temperature measuring sensors. **[9]**

Q3) a) Contrast between open loop and closed loop control system. **[7]**

b) A cardboard carton weighing 10 pounds is held in a gripper using friction against two opposing fingers. The coefficient of friction is 0.25 & the weight of the carton is directed parallel to finger surfaces the g factor used for calculation is 3. **[10]**

i) Determine required gripping force

ii) If safety factor is 1.5 calculate gripping force.

OR

P.T.O.

Q4) a) With neat sketch explain vacuum grippers. **[7]**

b) Explain the following types of magnetic grippers with neat sketch. **[10]**

i) Permanent Magnetic gripper

ii) Electro Magnetic gripper

Q5) a) Explain following Programming methods **[10]**

i) Computer Terminal

ii) Offline

iii) Walk Through

iv) Teach Pendant

b) Write a note on VAL-I and VAL-II. **[8]**

OR

Q6) a) Contrast between high level programming language and machine language. **[10]**

b) Explain the steps in development of program for robot system. **[8]**

Q7) a) Explain the role of artificial intelligence in robotics. **[8]**

b) Explain any three manufacturing operations performed by robots. **[9]**

OR

Q8) a) Explain any two medical applications of robot. **[8]**

b) Write a note on : **[9]**

i) Pick & Place Robots

ii) Welding Robots

iii) Assembly Robots

▽▽▽▽

Total No. of Questions : 8]

SEAT No. :

PB-2435

[Total No. of Pages : 3

[6263]-287

B.E. (Production Engineering) (Sandwich)

RELIABILITY ENGINEERING

(2019 Pattern) (Semester - VII) (411123 C) (Elective - III)

Time : 2½ Hours] *[Max. Marks : 70*

Instructions to the candidates :

1) ***Solve Q.1 or Q.2, Q.3 or Q.4, Q.5 or Q.6, Q.7 or Q.8.***
2) ***Figures to the right indicate full marks.***
3) ***Neat diagrams must be drawn wherever necessary.***
4) ***Use of Logarithmic Table, Slide rule is Electronic pocket calculator is allowed.***
5) ***Assume suitable data, if necessary.***

Q1) a) Explain Normal Distribution. **[7]**

b) Explain in detail Mean Time To Repair (MTTR). **[6]**

c) A system is composed of 4 units connected in series. The rates for these units are $\lambda 1 = 0.002$, $\lambda 2 = 0.003$, $\lambda 3 = 0.004$, $\lambda 4 = 0.007$. It is desired that the maximum failure rate for the system be $S^A = 0.01$. Allocate this among the four units. **[5]**

OR

Q2) a) In life testing of 100 specimens of a particular device the number of failures during each interval of twenty hours is shown in table. Estimate the MTTF for these specimens **[7]**

Time Interval Hours	Number of failures during the interval
T < 1000	0
1000 < T <= 1020	25
1020 < T <= 1040	40
1040 < T <= 1060	20
1060 < T <= 1080	10
1080 < T <= 1100	5

b) Write the mathematical expression and application for MTTF, MTTR and MTBF. **[3]**

c) Explain MTTF for series and parallel system. **[8]**

P.T.O.

Q3) a) Explain in brief Event representations in the Fault Tree Analysis. **[7]**

b) Let A and B be two variables, each of which can be in a binary state 0 or 1. What are the possible values for $\overline{A} + B \,\&\, \overline{B} * \overline{A}$. **[4]**

c) For a logic diagram shown in figure. Construct fault tree. **[6]**

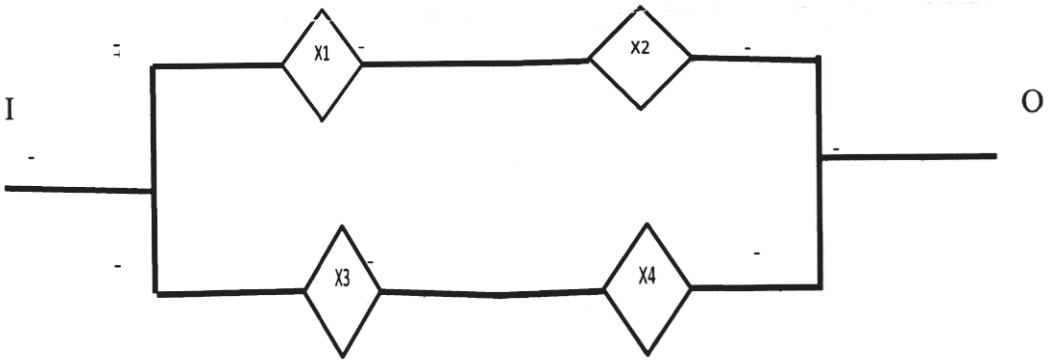

OR

Q4) a) The function of strategic experiment is monitored continuously by two observation Station A and B, functioning independently. It is necessary that at least 2, one of them function satisfactorily to monitor the progress of the experiment. Each of these observations stations receives power supply from two independent sources connected in parallel. A receives a power from C & D, and B receives a power from E & F for each observation station, the power from any one source is sufficient for operation. Draw the block diagram and the fault tree diagram for the system. **[6]**

b) Explain in brief Fault Tree Analysis (FTA). **[7]**

c) Explain DE Morgan's Theorem. **[4]**

Q5) a) What are the properties of Auto and Cross correlation function? **[6]**

b) What are the characteristics of Weibull Distribution? **[6]**

c) Explain in unit redundancy and element redundancy. **[6]**

OR

Q6) a) What are the characteristics of Weibull Distribution? **[8]**

b) Explain Rayleigh distribution. **[6]**

c) Write Characteristics of Poissons Distribution. **[4]**

Q7) a) i) Explain Component versus unit redundancy

ii) Consider two elements a and b with reliabilities 0.7 and 0.8 respectively to be connected in series as shown in Figure a

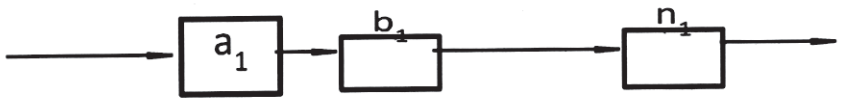

Figure a **[8]**

If redundancies are introduced in the form shown in Figure b and Figure c. What are resultant system reliabilities?

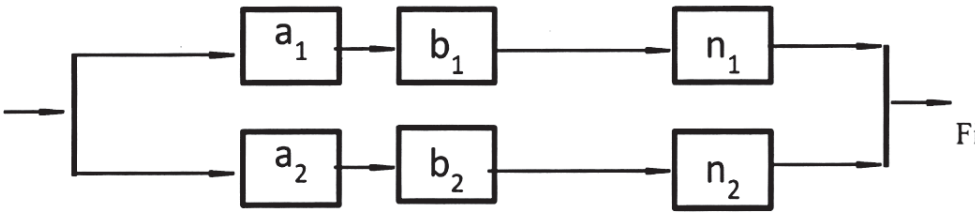

Figure b

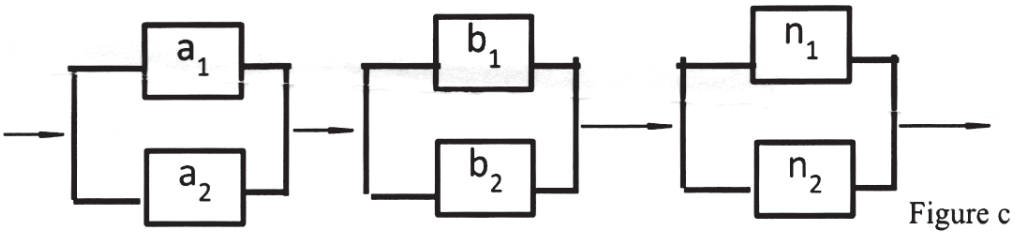

Figure c

b) Explain in brief unit redundancy. **[5]**

c) Define standby redundancy and explain its types. **[4]**

OR

Q8) a) Explain imperfect switching in redundancy. **[7]**

b) What are the properties of Correlation? **[6]**

c) The power supply to the operating unit of a hospital is provided by a generator whose Failure rate follows an exponential distribution law with parameters $\lambda 1 = 0.005$ per hour. A stand by battery unit is coupled through a decision switch which has a reliability $r_d = 0.90$. Calculate the reliability of the power supply s/m for a mission time of 10 hours if the battery failure rate follows a distribution law with parameter $\lambda 2 = 0.001$ per hour. **[4]**

▽▽▽▽

Total No. of Questions : 8]

SEAT No. :

PB-2436

[Total No. of Pages : 2

[6263]-288

B.E. (Production) (Sandwich Engineering)

MICRO ELECTRO MECHANICAL SYSTEMS

(2019 Pattern) (Semester - VII) (411123D) (Elective - III)

Time : 2½ Hours] ***[Max. Marks : 70***

Instructions to the candidates :

1) ***Answer Q.1 or Q.2, Q.3 or Q.4, Q.5 or Q.6, Q.7 or Q.8.***
2) ***Neat diagrams must be drawn wherever necessary.***
3) ***Figures to the right indicate full marks.***
4) ***Assume suitable data, if necessary.***

Q1) a) Discuss the concept of static bending of thin plates. **[8]**

b) What do you understand by Finite Element Analysis? Discuss the concept with an example. **[9]**

OR

Q2) a) Explain the concept of Thermo Mechanics. How is it related with FEM? **[9]**

b) What do you mean by Thin Film Mechanics in MEMS? Discuss its importance with MEMS. **[8]**

Q3) a) Discuss the concept of Scaling laws in Miniaturization in brief. **[9]**

b) How is Rigid Body-Dynamics associated in Scaling laws for Miniaturization. **[9]**

OR

Q4) a) Write a short note on Scaling in Heat Transfer. **[9]**

b) What do you understand by Electrostatic Forces in MEMS? Discuss in relation with Scaling. **[9]**

P.T.O.

Q5) a) What are significant issues related with Surface Micro-Machining? **[8]**

b) Write a note on LIGA process of Micromachining. **[9]**

OR

Q6) a) Discuss any 2 types of Micro Machining processes in brief. **[9]**

b) Describe in brief advantages and limitations of Micromachining processes. **[8]**

Q7) a) What are Sensors? Explain in brief the Mechanism of Sensing used in MEMS. **[9]**

b) Write a short note on Principle of Sensing with a suitable example. **[9]**

OR

Q8) a) What are the different types of Membrane Transducer Materials Used? **[9]**

b) Discuss any 2 of following : **[9]**

i) CLOC

ii) E Nose

iii) Chemotransistors

iv) Mass sensitive Chemosensors

▽▽▽▽

Total No. of Questions : 8]

SEAT No. :

PB2437

[Total No. of Pages : 2

[6263]-289
B.E. (Production Sandwich Engineering)
CREATIVE PRODUCT DESIGN
(2019 Pattern) (Semester - VII) (Elective - IV) (411124A)

Time : 2½ Hours] *[Max. Marks : 70*

Instructions to the candidates:

1) ***Answer Q.1 or Q.2, Q.3 or Q.4, Q.5 or Q.6 Q.7 or Q.8.***
2) ***Figures to the right indicate full marks.***
3) ***Use of a programmable calculator is not allowed.***
4) ***Write all necessary steps.***

Q1) a) What are the key points of traditional brainstorming. **[10]**

b) Give summary of 6-3-5 method. **[7]**

OR

Q2) a) Explain the process of executing morphological analysis. **[10]**

b) Write short note on Pugh's concept. **[7]**

Q3) a) Discuss the steps in product Teardown. **[10]**

b) What is product Portfolio architecture. Discuss with example. **[8]**

OR

Q4) Write short notes on following Benchmarking process tools. **[3×6=18]**

a) Indented Assembly Cost Analysis

b) Functional Form Diagrams

c) Trend Analysis

P.T.O.

Q5) a) Give any ten guidelines for Design for Assembly. **[10]**

b) What are the objectives of Design for Environment. **[7]**

OR

Q6) a) Discuss Global, Regional and Local Issues related to Environment. **[10]**

b) Mention Product Structure Guidelines and reasons in DFE. **[7]**

Q7) a) Explain the various stages of Product Life Cycle with the help of Diagram. **[8]**

b) State the advantages of product life cycle. **[5]**

c) Discuss PLM Vs PLCM. **[5]**

OR

Q8) a) Discuss following terms in context of product data / information. **[3×4=12]**

i) Definition data of the product

ii) Life cycle data of the product

iii) Metadata that describes the product and life cycle data

b) Discuss PLM Vs PLCM. **[6]**

Total No. of Questions : 8]

SEAT No. :

PB2438

[Total No. of Pages : 2

[6263]-291
B.E. (Production Engineering) (Sandwich)
CAD/CAM
(2019 Pattern) (Semester - VII) (Elective - IV) (411124 C)

Time : 2½ Hours] *[Max. Marks : 70*

Instructions to the candidates:

1) ***Answer Q.1 or Q.2, Q.3 or Q.4, Q.5 ro Q.6 Q.7 ro Q.8.***
2) ***Figures to the right indicate full marks.***
3) ***Use of a programmable calculator is not allowed.***
4) ***Write all necessary steps.***

Q1) a) Discuss important features or Rapid Prototyping & applications. **[9]**

b) Discuss classification of Rapid Prototyping - FDM, LOM, SLA, SLS. **[9]**

OR

Q2) a) Explain CAD and data exchange format & data format details. **[9]**

b) Discuss part slicing and orientation and its importance. **[9]**

Q3) a) Explain computer integrated production management system & enterprise resource planning. **[9]**

b) Discuss working principles of CNC Turning center and Milling center. **[8]**

OR

Q4) a) Discuss the siemens model of CIM & IBM concept of CIM. **[9]**

b) Discuss steps in developing CNC part program in detail. **[8]**

P.T.O.

Q5) a) Discuss computer Aided Process Planning. **[9]**

b) Computer integrated production management system, inventory material requirement planning. **[9]**

OR

Q6) a) Explain manaufacturing resource planning & enterprise resource planning. **[9]**

b) Discuss computer application in manufacturing & inspection and quality control. **[9]**

Q7) a) Discuss the elements of product life cycle. **[9]**

b) Discuss machine cell design and Cellular manufacturing. **[8]**

OR

Q8) a) Explain Part Families, Part classification and coding. **[9]**

b) Explain production flow analysis & rank order clustering algorithm. **[8]**



Total No. of Questions : 8]

SEAT No. :

PB2439

[Total No. of Pages : 3

[6263]-292

B.E. (Production Engineering) (Sandwich)

DATA ANALYTICS

(2019 Pattern) (Semester - VII) (Elective - IV) (411124 D)

Time : 2½ Hours] *[Max. Marks : 70*

Instructions to the candidates:

1) ***Answer Q.1 or Q.2, Q.3 or Q.4, Q.5 ro Q.6 Q.7 ro Q.8.***
2) ***Figures to the right indicate full marks.***
3) ***Neat diagram must be drawn wherever necessary.***
4) ***Assume suitable data if necessary.***

Q1) a) Following are the three conditions; fill in the blanks with correct option either (a) mean, or (b) mode, or (c) median which is suitable for that condition. (Write your answers in answer book). **[10]**

i) Insurance analysts often calculate the _____ age of the individuals they provide insurance for so they can know the average age of their customers.

ii) Actuaries often calculate the _____ amount spends on healthcare each year by individuals so they can know how much insurance thye need to be able to provide to individuals.

iii) Actuaries also calculate the _____ of their customers' age so they can know which age group uses their insurance the most.

iv) Human resource managers often calculate the _____ salary of individuals in a certain field so that they can be know what average salary to offer to new employees.

v) Human resource managers also calculate the _____ of different positions in the company so that they can be aware of the most commmon position of employees at their company.

b) Find out mean, mode and median of the given data set : **[8]**

D = {1, 2, 3, 4, 5, 6, 7, 8, 9, 10, 11, 12, 13, 14, 15, 16, 17, 18, 19, 20, 21, 27, 28, 29, 2, 3, 4, 5, 7, 8, 9, 12, 13, 17, 19, 35, 40, 42, 2, 3, 4, 12, 19, 52, 2, 61, 96, 2, 3, 96, 97, 99, 102, 2, 111}

OR

P.T.O.

Q2) a) The job market is being studied in several neighborhoods. Let x represent total number of jobs in a given neighborhood, and y represents entry level jobs in the same neighborhood. A sample six neighborhood gave the following information : **[12]**

i) Find out the linear regression model using least square method.

ii) For a neighborhood with 40 jobs, how many jobs are predicted at entry level?

x	16	33	50	28	50	25
y	2	3	6	5	9	3

b) What do you understand by neural network in deep learning? Write are the advantages, disadvantages and application of the neural network. **[6]**

Q3) a) The following is data collected by the 'A' ice-cream manufacturer's sales department in the 'P' city. Let x represent temperature observed in months (ºC), and y represents sell of the ice-cream in the same month (tons). They want to analyze their sells with months and their temperatures. The collected data is transferred to R & D department and you are the head of R & D. The company asking you to find out covariance and correlation between temperature and monthly ice-cream sell? **[12]**

Months	Jan.	Feb.	Mar.	Apr.	May	June	July	Aug.	Sept.	Oct.	Nov.	Dec.
X	15	21	31	34	38	37	31	28	23	25	16	13
Y	09	18	21	23	25	19	14	12	10	12	09	08

b) Write the difference between covariance and correlation. **[6]**

OR

Q4) What is mean by classification algorithm in machine learning? Discuss any three from the following : **[18]**

i) Logistic regression

ii) Naive bays

iii) K-NN

iv) Decision Tree

v) Random Forest

Q5) a) The score of the cricket teams England and New Zealand played in world cup 2019 has given below. Assume both teams played same number of matches. In the last match, both teams scored 241 against each other. With the help of z-score formula find out which team performs consistent and good in the last match as per their series performance. **[12]**

ENG = {350, 305, 337, 221, 212, 397, 321, 311, 334, 241}

NZ = {239, 186, 157, 291, 245, 269, 425, 263, 337, 241}

b) In a class, average placement salaries of the student are 3.1 LPA and given salaries are normally distributed with standard deviation of 2. Then, find how many percentages of student lies between salaries offered from 7.46 LPA to 10 LPA? **[6]**

OR

Q6) a) What is predictive analysis? Discuss with at least five real-time applications. **[9]**

b) Discuss the following : **[9]**

i) Expert system

ii) Principal component analysis

iii) Genetic algorithm

Q7) a) A factory has machine that dispenses 80 ml of the fluid in a bottle. An employee believes the average amount of fluid is not 80 ml. Using 40 sample, he measures the average amount dispensed by the machine is 78 ml with std. dev. of 2.5. **[10]**

i) State null hypothesis (Ho) and alternative hypothesis (Ha)

ii) At 95% confidence interval level, is there enough evidence to support the idea that machine not working properly?

b) Assume that SAT score are normally distributed and the SAT score of 1150 has a z score of 0.44. Find out how many percentages of students scored above and below the 1150 SAT score? Show the answers using normal distribution plot. **[6]**

OR

Q8) Discuss the following : **[16]**

a) Markov chain analysis

b) Monte carlo simulation

c) Q learning

d) SARSA



Total No. of Questions : 8]

SEAT No. :

PB-2440

[Total No. of Pages : 2

[6263]-293

B.E. (Production Engineering) (Sandwich)

SUPPLY CHAIN MANAGEMENT

(2019 Pattern) (Semester - VIII) (411134A) (Elective - V)

Time : 2½ Hours] *[Max. Marks : 70*

Instructions to the candidates:

1) ***Solve Q1 or Q2, Q3 or Q4, Q5 or Q6, Q7 or Q8.***
2) ***Figures to the right indicate full mark.***
3) ***Neat diagrams must be drawn wherever necessary.***
4) ***Assume suitable data necessary.***

Q1) a) What are the important measures to build strategic frame work? **[9]**

b) Explain how safety inventory can be estimated in manufacturing sector. **[8]**

OR

Q2) a) Elaborate cycles & push-pull boundary in supply chain when you are purchasing any product from online portal. **[9]**

b) How to determine optimum level of product availability? Discuss with suitable example. **[8]**

Q3) a) Describe modes of transportation popularly used in supply chain decisions in warehouse. **[9]**

b) How Changing the distribution network affects the supply chain logistics. Justify with suitable example. **[8]**

OR

Q4) a) Explain role of network design in transportation. **[9]**

b) Explain in brief factors influencing facility decisions. **[8]**

P.T.O.

Q5) a) Explain the supply chain macro processes in medical framework. **[9]**

b) What are the different effects seen in demand fluctuations in Supply Chain Management in agriculture sector? **[9]**

OR

Q6) a) What actions should be taken by management for achieving tact time in supply chain? **[9]**

b) Discuss the impact of E-Business on customer service in glossary industry. **[9]**

Q7) a) Explain the role of warehouse networking in pricing and revenue management. **[9]**

b) Brief the steps to evaluate network design decisions using decision trees. **[9]**

OR.

Q8) a) How financial evaluation impact in Supply Chain Decisions? **[9]**

b) Explain how the financial factors affects supply chain in manufacturing industry. **[9]**

⌘⌘⌘

Total No. of Questions : 8]

SEAT No. :

PB-2441

[Total No. of Pages : 2

[6263]-294

B.E. (Production Engineering) (Sandwich)

PLANT ENGINEERING AND MAINTENANCE

(2019 Pattern) (Semester - VIII) (411134B) (Elective - V)

Time : 2½ Hours] *[Max. Marks : 70*

Instructions to the candidates:

1) ***Solve Q1 or Q2, Q3 or Q4, Q5 or Q6, Q7 or Q8.***
2) ***Figures to the right indicates full mark.***
3) ***Neat diagrams must be drawn wherever necessary.***
4) ***Use of Logarithmic Table, Slide rule is Electronic pocket calculator is allowed.***
5) ***Assume suitable data necessary.***

Q1) a) Elaborate MICLASS and CUSDD system in detail. **[9]**

b) Why quantitative decision making is essential for any maintenance system. **[8]**

OR

Q2) a) Elaborate preventive maintenance. Explain any two methods in detail. **[9]**

b) Write short notes on the following (any two) : **[8]**

i) Spare part management system

ii) Online and off line maintenance system

iii) Condition based maintenance system

Q3) a) Enlist requirements for P.M. Life cycle. **[9]**

b) Brief on concept of reliability of a system. **[8]**

OR

Q4) a) Explain different Rigorous models in preventive maintenance system. **[9]**

b) Write a note on Mathematical formulation method in maintenance. **[8]**

P.T.O.

Q5) a) Explain various methods of plant safety fire protection. **[9]**

b) Brief on material handling equipment's in any automobile industry. **[9]**

OR

Q6) a) Discuss various norms for pollution control inside of plant. **[9]**

b) Elaborate accident prevention methods over shop any floor. **[9]**

Q7) a) Describe hot ferrography technique in detail. **[9]**

b) Elaborate total productive maintenance. **[9]**

OR

Q8) a) Explain briefly terotechnology with its applications. **[9]**

b) Differentiate between inherent availability and operational availability. **[9]**

⌘⌘⌘

Total No. of Questions : 8]

SEAT No. :

PB-2442

[Total No. of Pages : 2

[6263]-295

B.E. (Production Engineering) (Sandwich)

INDUSTRIAL RELATION AND HUMAN RESOURCE MANAGEMENT

(2019 Pattern) (Semester - VIII) (411134 C) (Elective - V)

Time : 2½ Hours] ***[Max. Marks : 70***

Instructions to the candidates :

1) ***Solve Q.1 or Q.2, Q.3 or Q.4, Q.5 or Q.6, Q.7 or Q.8.***
2) ***Figures to the right side indicate full marks.***
3) ***Assume suitable data, if necessary.***

Q1) a) Discuss the concept of job Description, job enlargement, job enrichment & job rotation. **[9]**

b) Explain the importance of training & development & further describe the need for evaluation of training programmes. **[8]**

OR

Q2) a) Explain in detail the process of recruitment & selection of the employees. **[9]**

b) Define succession planning and steps involved in succession planning. **[8]**

Q3) a) Discuss the different methods of training used by an organization for enhancing employee performance. **[9]**

b) What are the evaluation tools for training programs? **[8]**

OR

Q4) a) Design a training programme. For newly inducted employees in the sales department of a pharmaceutical company. **[9]**

b) Explain various on the job and off the job training methods in detail. **[8]**

P.T.O.

Q5) a) What do you understand by Performance Appraisal, management system? Elaborate on any three methods of Performance Appraisal. **[9]**

b) What are the ethics in performance appraisal? How can ethics play an important role in the performance of organization? **[9]**

OR

Q6) a) Explain performance Appraisal & discuss its relevance to employee's Compensation. **[9]**

b) What are the different rating errors in performance appraisal? Explain in detail. **[9]**

Q7) a) What are the different types of employee separation methods? **[9]**

b) What is the golden handshake in HR? Explain its benefits and disadvantages. **[9]**

OR

Q8) a) What do you mean by industrial relations? Discuss the role of various participants in industrial relations. **[9]**

b) What is the concept of layoff in HRM? What are the causes of layoffs? How can HR handle layoffs? **[9]**

▽▽▽▽

Total No. of Questions : 8]

SEAT No. :

PB-2443

[Total No. of Pages : 2

[6263]-296

B.E. (Production Sandwich Engineering)

MARKETING MANAGEMENT

(2019 Pattern) (Semester - VIII) (411134 D) (Elective - V)

Time : 2½ Hours] ***[Max. Marks : 70***

Instructions to the candidates :

1) ***Answer Q.1 or Q.2, Q.3 or Q.4, Q.5 or Q.6, Q.7 or Q.8.***
2) ***Neat diagrams must be drawn wherever necessary.***
3) ***Figures to the right side indicate full marks.***
4) ***Assume suitable data, if necessary.***

Q1) a) What is Market Segmentation? Discuss in relation with current market scenario with suitable examples. **[8]**

b) Discuss in Brief Gathering Marketing Information with Production Engineering Perspective. **[9]**

OR

Q2) a) What is the relation between segmenting the market and product positioning in the market? Discuss with suitable Example. **[9]**

b) How is strategic decision making is done in Marketing Management? Discuss. **[8]**

Q3) a) Discuss the concept of Product Development from Marketing Perspective. **[9]**

b) What are intermediaries one needs to face during marketing of products during product development. **[9]**

OR

Q4) a) Write a note on Price Theories of Marketing Organization for new product. **[9]**

b) Explain the concept of designing and managing product promotions. Discuss in relation with New Product Development. **[9]**

P.T.O.

Q5) a) Explain Sales Force and Sales Terries in regards to Marketing Management. **[8]**

b) Discuss the concept of services marketing. **[9]**

OR

Q6) a) Discuss the relationship between Technological Innovations and Marketing. **[9]**

b) Write a note about social marketing and its importance. **[8]**

Q7) a) What is marketing research? Discuss its importance with reference to Marketing Management. **[9]**

b) How are quantitative tools useful in Marketing Research? Discuss in brief. **[9]**

OR

Q8) a) Explain the importance of Marketing Research from an Engineering Perspective. **[9]**

b) Discuss in brief the Structure and Methods of Marketing Research. **[9]**

▽▽▽▽

Total No. of Questions : 8]

SEAT No. :

PB-2444

[Total No. of Pages : 2

[6263]-297

B.E. (Artificial Intelligence & Machine Learning)

INFORMATION RETRIEVAL IN AI

(2019 Pattern) (Semester - VII) (418541)

Time : 2½ Hours] *[Max. Marks : 70*

Instructions to the candidates:

1) ***Answer Q.1 Or Q.2, Q.3 Or Q.4, Q.5 Or Q.6 & Q.7 Or Q.8.***
2) ***Neat diagrams must be drawn wherever necessary.***
3) ***Figures to the right indicate full marks.***
4) ***Assume suitable data, if necessary.***

Q1) a) Discuss in details Precision & recall with example. **[8]**

b) Write Short Note on : **[10]**

i) Query Specification

ii) Document Context

OR

Q2) a) Explain the Terms :

i) Mean Reciprocal Rank (MRR)

ii) Normalized Discounted cumulative gain (NDCG). **[10]**

b) Write Note on Swets model. **[8]**

Q3) a) Explain in Details : **[8]**

i) Collection Partitioning

ii) Query Processing

b) Discuss on Background-Spatial Access Method in details. **[9]**

OR

Q4) a) Explain One-Dimensional Time Series & Two-Dimensional color Images. **[8]**

b) Explain in details Generic Multimedia Indexing Approach & Automatic Feature Extraction. **[9]**

P.T.O.

Q5) a) Explain the Terms of Search Engines : **[9]**

i) Ranking

ii) Crawling

iii) Indices

b) How to characterize the web & What are the challenges of web? **[9]**

OR

Q6) a) Write Note on : **[9]**

i) Centralized Architecture

ii) Distributed Architecture

b) Explain in details Meta Searchers & Searching using Hyperlinks. **[9]**

Q7) a) Explain in detail about the Metasearch along with its advantages and disadvantages. **[9]**

b) Write Note on : **[8]**

i) Need of Metasearch

ii) Significance of Metasearch

OR

Q8) a) How a metasearch engine works? Explain in details Example of Metasearch engines. **[9]**

b) Difference between Simple Search & Metasearch. **[8]**

Total No. of Questions : 8]

SEAT No. : [ ]

PB2445

[Total No. of Pages : 3

[6263]-298

B.E. (Artificial Intelligence and Machine Learning)

CLOUD COMPUTING

(2019 Pattern) (Semester - VII) (418542)

Time : 2½ Hours] ***[Max. Marks : 70***

Instructions to the candidates:

1) ***Answer Q1 or Q2, Q3 or Q4, Q5 or Q6, Q7 or Q8.***
2) ***Neat diagrams must be drawn wherever necessary.***
3) ***Figures to the right side indicate full marks.***
4) ***Assume Suitable data if necessary.***

Q1) a) List different cloud services and explain the following services with a diagram. **[6]**

i) Software-as-a-Service

ii) Infrastructure-as-a-service

b) Describe different EMC Technologies and Amazon EC2 Services. **[6]**

c) Write a note on Microsoft Azure Platformarchitecture. **[6]**

OR

Q2) a) Explain the steps to launch an EC2 instance in AWS Cloud. **[6]**

b) What is VMware Acquisition in the Cloud? And Explore Amazon S3 Service in the cloud. **[6]**

c) Write a note on: **[6]**

i) Database As- A Service

ii) Monitoring as a service

P.T.O.

Q3) a) Write a Note on : **[6]**

i) SimpleDB

ii) Dynamo Cloud data stores

b) Explain GFS Cloud File system with a diagram. **[6]**

c) Write any five Challenges of the cloud storage system. **[5]**

OR

Q4) a) Explain the virtual storage container in detail. **[6]**

b) Draw and explain the General Architecture of the Hadoop Distributed File System (HDFS). **[6]**

c) Differentiate between Big Table and Hbase Table in the Cloud Computing. **[5]**

Q5) a) Discuss the following cloud Security Terms: **[6]**

i) Confidentiality

ii) Authenticity

iii) Vulnerability

b) Define Encryption and elaborate Digital Signature in the cloud with a Diagram. **[6]**

c) Write notes on Identity Access Management (IAM) and Single-Sign On (SSO). **[6]**

OR

Q6) a) Explain Security Mechanisms and Security Policies in the cloud. **[6]**

b) Define Hashing and explain Public Key Infrastructure (PKI) in the Cloud. **[6]**

c) Write notes on **[6]**

i) Integrity

ii) Threat

iii) Availability.

Q7) a) What is an Open Cloud Consortium? Discuss Virtualization Format in the cloud. **[6]**

b) Discuss the following protocol **[6]**

i) SMTP

ii) POP

iii) IMAP

c) Explain different Glances of Docker. **[5]**

OR

Q8) a) Drawand explain DockerWorkflow. **[6]**

b) Explain common standards for security in cloud computing. **[6]**

c) Write a note on: **[5]**

i) Open Virtualization Format

ii) Standards for Application Developers



Total No. of Questions : 8]

SEAT No. :

[Total No. of Pages : 2

PB-2446

[6263]-299

B.E.(Artificial Intelligence and Machine Learning)

DEEP LEARNING FOR AI

(2019 Pattern) (Semester - VII) (418543)

Time : 2½ Hours] *[Max. Marks : 70*

Instructions to the candidates:

1) ***Answer Q1 or Q2, Q3 or Q4, Q5 or Q6, Q7 or Q8.***
2) ***Neat diagrams must be drawn wherever necessary.***
3) ***Figures to the right side indicate full marks.***
4) ***Assume suitable data, if necessary.***

Q1) a) What is Recurrent Neural Network (RNN)? State and explain types of RNN in brief. **[10]**

b) How exactly the vanishing gradient problem occurs in RNN? How to prevent vanishing gradient problem? **[8]**

OR

Q2) a) What is Long Short-Term Memory Network (LSTM)? Explain the general layout of a Long Short Term Memory Network with suitable diagram. **[10]**

b) Describe Recursive Neural Network and types of Recursive Neural Network. Explain its advantages. **[8]**

Q3) a) State applications of autoencoder. Explain any three applications in detail. **[10]**

b) Explain how the dimensionality reduction feature of autoencoder is useful in information retrieval task? **[7]**

OR

Q4) a) Explain the architecture of sparse autoencoder with suitable diagram. What are advantages of sparse encoder over usual autoencoder. **[10]**

b) Autoencoders use unsupervised learning approach. Justify the statement. **[7]**

P.T.O

Q5) a) Why the network is called Greedy Layer Wise Pretraining Network? **[10]**

b) Justify when to use domain adaptation and when to use transfer learning. **[8]**

OR

Q6) a) Explain distributed representation with example. **[10]**

b) What is transfer learning? Elaborate transfer learning domain adaptation. **[8]**

Q7) a) Explain Generative Adversarial Network Architecture and its Components with neat diagram. **[10]**

b) Explain Different Types of GAN Models. **[7]**

OR

Q8) a) What is Discriminator? Explain the different Applications of Generative Adversarial Networks? **[10]**

b) Write short note on Denoising and Sparcity. **[7]**



Total No. of Questions : 8]

SEAT No. :

PB-2447

[Total No. of Pages : 2

[6263]-300

B.E. (Artificial Intelligence & Machine Learning)

QUANTUM COMPUTING

(2019 Pattern) (Semester - VII) (418544 A) (Elective - III)

Time : 2½ Hours] *[Max. Marks : 70*

Instructions to the candidates :

1) ***Answer Q.1 or Q.2, Q.3 or Q.4, Q.5 or Q.6, Q.7 or Q.8.***
2) ***Neat diagrams must be drawn wherever necessary.***
3) ***Figures to the right indicate full marks.***
4) ***Assume suitable data, if necessary.***

Q1) a) Explain the significance of universal quantum gates? **[6]**

b) How do qubits differ from bits? **[6]**

c) Explain with neat diagram Quantum Circuit. **[6]**

OR

Q2) a) Explain the significance of deferred measurement principle in Quantum Computing? **[6]**

b) What are quantum gates? Explain the operation of Single Qubit Operation in quantum computing. **[6]**

c) Write note on two level unitary gates. **[6]**

Q3) a) Explain the use of Quantum Fourier transform in Quantum Computing. **[5]**

b) Explain the significance of universal quantum simulator proposed. **[6]**

c) What is the difference between a simulated Quantum Computer and an actual one? **[6]**

OR

Q4) a) Explain the Unitarity property of Quantum Fourier Transforms. **[5]**

b) Write different steps of implementation of Shor's Algorithm. **[6]**

c) What is the difference between discrete Fourier transform and fast Fourier Transform? Explain in context with Quantum Computing. **[6]**

P.T.O.

Q5) a) Explain any one application of Fourier transform in context of Quantum Computing? **[5]**

b) How to derive the expression for the probability in quantum phase estimation? **[6]**

c) What is most commonly used model to describe a quantum algorithm? Explain in detail. **[6]**

OR

Q6) a) Is the Quantum Fourier Transform (QFT) optimal in the quantum phase estimation algorithm? Explain in detail? **[8]**

b) Explain properties of Quantum Fourier Transform. **[9]**

Q7) a) How the Quantum Machine Leaning works? Write short note on "Swarm Robotics"? **[10]**

b) What is the Quantum AI? Explain the benefits of Quantum AI? **[8]**

OR

Q8) a) Explain in detail any one application domain for Quantum Machine Learning? **[6]**

b) How does Quantum Cryptography work? What is it used for? **[6]**

c) Write short note on quantum neural network? **[6]**

▽▽▽▽

Total No. of Questions : 8]

SEAT No. :

[Total No. of Pages : 2

PB-2448

[6263]-301

B.E.(Artificial Intelligence & Machine Learning)

Blockchain Technology (Elective - III)

(2019 Pattern) (Semester - VII) (418544B)

Time : 2½ Hours] *[Max. Marks : 70*

Instructions to the candidates:

1) ***Solve Q1 or Q2, Q3 or Q4, Q5 or Q6, Q7 or Q8.***
2) ***Neat diagrams must be drawn wherever necessary.***
3) ***Figures to the right side indicate full marks.***
4) ***Assume suitable data if necessary.***

Q1) a) What is Ethereum? Explain Features of Ethereum. **[7]**

b) What is Smart contract? How smart contract work? **[6]**

c) State and explain the various components of Ethereum. **[5]**

OR

Q2) a) What is Ethereum? Explain. **[7]**

b) Write a short note on **[6]**

i) Ethereum Virtual Machine: EVM

ii) Ethereum Programming Languages

iii) Runtime Byte Code

c) Explain Ethereum structure with operations in detail. **[5]**

Q3) a) What is Hyper ledger and how does it work? **[6]**

b) Draw and Explain the architecture of Hyper ledger fabric system. **[6]**

c) What is Hyper ledger technology and Hyper ledger fabric? **[5]**

OR

Q4) a) What is Hyper ledger? Explain Features of hyper ledger blockchain? **[6]**

b) Explain the differences between Ethereum and Hyper ledger blockchain. **[6]**

c) State and explain the benefits of Hyper ledger fabric. **[5]**

P.T.O

Q5) a) What is Tokenization? Explain the technology behind Tokenization. **[7]**

b) How blokchain tokenization can help in enterprise systems? Elaborate. **[6]**

c) Describe the Consensus mechanism in brief. **[5]**

OR

Q6) a) State and explain different types of Consensus algorithm. **[7]**

b) Write a short note on: **[6]**

i) Tokenizing Shares and Fund Raising

ii) Challenges to Tokenization.

c) What is Tokenization? Explain its benefits? **[5]**

Q7) a) Explain role of blockchain applications in Health Insurance. **[6]**

b) Explain the benefits of blockchain in various application based scenarios. **[6]**

c) Explain the "Evil Sides" of Blockchain and Legal Regulations for Blockchain. **[5]**

OR

Q8) a) Discuss Blockchain applications for Supply chain Financing. **[6]**

b) Explain different aspects of Risks and limitations of blockchain. **[6]**

c) What are the selection criteria for Blockchain platform for applications? Explain. **[5]**



Total No. of Questions : 8]

SEAT No. :

PB-2449

[Total No. of Pages : 2

[6263]-302

B.E.(Artificial Intelligence & Machine Learning)

AI IN DRONES

(2019 Pattern) (Semester - VII) (418544C) (Elective - III)

Time : 2½ Hours] ***[Max. Marks : 70***

Instructions to the candidates:

1) ***Answer Q1 or Q2, Q3 or Q4, Q5 or Q6, Q7 or Q8.***
2) ***Neat diagrams must be drawn wherever necessary.***
3) ***Figures to the right side indicate full marks.***
4) ***Assume suitable data if necessary.***

Q1) a) Describe Payload. Explain the different types and their significance for drones. **[9]**

b) What are the communication methods used by drones? **[9]**

OR

Q2) a) What are the concepts of kinematics and dynamics in drone? **[9]**

b) Demonstrate the different Antenna categories in drone. **[9]**

Q3) a) What is Global Positioning System? Describe with appropriate example. **[9]**

b) Describe in detail inertial navigation in drone. **[8]**

OR

Q4) a) Explain waypoint navigation using a relevant example. **[8]**

b) What does drone path planning consist of? How is path planning carried out? **[9]**

Q5) a) What does drone flight control mean? Discuss in detail. **[9]**

b) Explain how a drone's transmitter and receiver work? **[9]**

OR

Q6) a) What are the different types of electronic speed controllers. **[9]**

b) Describe the different types of flight controllers? **[9]**

P.T.O

Q7) a) What do you mean by aerial photography? Explain with example. **[9]**

b) Explain drone mapping and surveying. **[8]**

OR

Q8) a) What are the applications of drones in precision agriculture? **[9]**

b) Explain with an example of how a drone is used to inspect a building. **[8]**



Total No. of Questions : 8]

SEAT No. :

PB2450

[Total No. of Pages : 2

[6263]-303

B.E. (Artificial Intelligence & Machine Learning)

ETHICAL HACKING AND CYBER FORENSICS

(2019 Pattern) (Semester-VII) (Elective-IV) (418545A)

Time : 2½ Hours] *[Max. Marks : 70*

Instructions to the candidates:

1) ***Attempt question Q1 or Q2, Q3 or Q4, Q5 or Q6, Q7 or Q8.***
2) ***Neat diagrams must be drawn wherever necessary.***
3) ***Figures to the right indicate full marks.***
4) ***Assume suitable data if necessary.***

Q1) a) What is Metasploit, and what is its primary function in the context of ethical hacking? **[9]**

b) Can you summarize the stages involved in a typical Metasploit attack? **[9]**

OR

Q2) a) Can you summarize the various stages of a typical host exploitation using Metasploit? **[9]**

b) Describe the role of social engineering in password cracking techniques employed by ethical hackers. **[9]**

Q3) a) Recall the importance of OWASP's Top 10 vulnerabilities in the context of web application security. **[9]**

b) How would you use a vulnerability scanner to identify and exploit a specific vulnerability in a web application? **[8]**

OR

Q4) a) Name the different types of wireless attacks that ethical hackers use in security assessments. **[9]**

b) What is steganography, and how does it differ from cryptography in the context of secure communication? **[8]**

P.T.O.

Q5) a) Identify the key tools and technologies utilized in digital forensics for evidence examination and extraction. **[9]**

b) Describe the importance of maintaining chain of custody in digital forensics and its impact on evidence admissibility. **[9]**

OR

Q6) a) Recall the fundamental steps involved in conducting a mobile device forensic analysis. **[9]**

b) Explain the challenges associated with preserving and capturing network data in network forensics. **[9]**

Q7) a) What is cloud-based digital forensics, and how does it differ from traditional digital forensics methods? **[9]**

b) What is the Internet of Things (IoT), and how does it impact cybersecurity and digital forensics? **[8]**

OR

Q8) a) Name the various ethical guidelines or codes of conduct that guide professionals in ethical hacking and cyber forensics. **[9]**

b) Explain the significance of legal compliance in ethical hacking and cyber forensic practices. **[8]**



Total No. of Questions : 8]

SEAT No. :

PB2451

[Total No. of Pages : 2

[6263]-304

B.E. (Artificial Intelligence & Machine Learning)

AUGMENTED REALITY AND VIRTUAL REALITY

(2019 Pattern) (Semester-VII) (418545B) (Elective-IV)

Time : 2½ Hours] *[Max. Marks : 70*

Instructions to the candidates:

1) ***Answer Q1 or Q2, Q3 or Q4, Q5 or Q6, Q7 or Q8.***
2) ***Neat diagrams must be drawn wherever necessary.***
3) ***Figures to the right indicate full marks.***
4) ***Assume suitable data if necessary.***

Q1) a) What is Virtual Reality? Explain perception of Motion in detail. **[9]**

b) Explain the process for Combining Sources of Information for visual rendering. **[8]**

OR

Q2) a) Explain how representation of Motion in Real and virtual worlds differs. **[8]**

b) What is Shading Model? Explain with eg. and relevant diagram. **[9]**

Q3) a) Define Augmented Reality. Explain the real-world applications of Augmented Reality. **[8]**

b) Explain the system structure of Augmented Reality with suitable applicable diagram. **[9]**

OR

Q4) a) Describe historical developmental phases of Augented Reality. **[8]**

b) What is Mobile Augmented Reality? Write down different advantages and disadvantages of Mobile Augmented Reality. **[9]**

Q5) a) Explain various displays used in Augmented Reality Hardware. **[9]**

b) Explain the requirements and characteristics for Sensory and spatial display models. **[9]**

OR

P.T.O.

Q6) a) Enlist and explain types of AR devices. **[9]**

b) Explain the process of calibration and registration. In what aspects both of them are different? **[9]**

Q7) a) Explain various SDKs and frameworks for AR App development. **[9]**

b) Explain applications of VR in Gaming and Entertainment. **[9]**

OR

Q8) Write short notes on (Any 3) **[18]**

a) AR application development using Unity

b) AR application development using ARCore and Vuforia

c) Sensor Fusion

d) Applications of AR and VR in Defense and Aerospace.



Total No. of Questions : 8]

SEAT No. :

PB2452

[Total No. of Pages : 2

[6263]-305

B.E. (Artificial Intelligence & Machine Learning)

DevOps IN MACHINE LEARNING

(2019 Pattern) (Semester-VII) (418545C) (Elective-IV)

Time : 2½ Hours] *[Max. Marks : 70*

Instructions to the candidates:

1) ***Answer Q1 or Q2, Q3 or Q4, Q5 or Q6, Q7 or Q8.***
2) ***Neat diagrams must be drawn wherever necessary.***
3) ***Figures to the right indicate full marks.***
4) ***Assume suitable data if necessary.***

Q1) a) Define Continuous deployment. What are its benefits? Explain Deployment pipeline with suitable diagram/case study. **[9]**

b) What is Test Driven Deployment? Explain different steps involved in TDD? **[8]**

OR

Q2) a) Differentiate between: **[8]**

i) Continuous Integration vs Continuous deployment

ii) Continuous Delivery vs Continuous deployment

b) What is Behaviour Driven Development (BDD)? Explain different steps involved in BDD? How BDD is different than TDD? **[9]**

Q3) a) Explain the concept of Virtualization and Containerization with appropriate diagram and eg. **[9]**

b) Explain how version control is achieved using Git? **[8]**

OR

Q4) a) Explain Continuous testing with Selenium. **[8]**

b) Explain Serverless orchestration in Kubernetes **[9]**

Q5) a) Explain with suitable diagram machine learning life cycle. How MLOPs is useful in this? **[9]**

b) Enlist and explain various tools to create ML pipelines. **[9]**

OR

P.T.O.

Q6) a) Explain different roles involved in MLOPs. How these roles are different than DevOps? **[9]**

b) Explain with suitable diagram components of MLOPs **[9]**

Q7) a) Define MLOPs. Explain various stages of CI/CD in MLOPs using suitable case study/diagram. **[9]**

b) Explain with suitable case study how data quality and integrity is maintained in MLOPs. **[9]**

OR

Q8) Write short notes on (Any 3) **[18]**

a) JIRA

b) MLOPS maturity model levels

c) Docker

d) Future trends in MLOPs



Total No. of Questions : 8]

SEAT No. :

PB4402

[Total No. of Pages : 2

[6263]-306

B.E.(Artificial Intelligence and Machine Learning)
NATURAL LANGUAGE PROCESSING
(2019 Pattern)(Semester -VIII)(418550)

Time : 2½ Hours] *[Max. Marks :70*

Instructions to the candidates:

1) ***Answer Q.1or Q.2, Q.3 or Q.4, Q.5 or Q.6, Q.7 or Q.8.***
2) ***Neat diagrams must be drawn Wherever necessary.***
3) ***Figures to the right side indicate full marks.***
4) ***Assume suitable data, if necessary.***

Q1) a) Explain the generative models of language. **[6]**

b) Explain with an example concept of: **[6]**

i) word2vec

ii) doc2vec

c) Given a document-term matrix with the following counts: **[6]**

	Document 1	Document 2	Document 3
Term 1	10	5	0
Term 2	2	0	8
Term 3	1	3	6

Compute TF-IDF Score of “Term 1” in “Document 1”.

OR

Q2) a) Explain the Latent Dirichlet Allocation (LDA) algorithm and its application in topic modeling. **[9]**

b) Describe the process of building graph-based model with the help of an example. **[9]**

Q3) a) Define Vector Space Model. Explain it with suitable eg. **[6]**

b) Illustrate the concept of coreference resolution with example. **[6]**

c) Discuss Cross lingual information Retrieval. **[5]**

OR

P.T.O.

Q4) a) Describe Information Retrieval System in Natural Language processing. **[9]**

b) Describe entity extraction and relation extraction with the help of examples. **[8]**

Q5) a) Enlist various tools available for NLP application development. How NLTK is different than TextBlob? **[6]**

b) Describe linguistic resources. **[6]**

c) Explain WordNet with suitable eg. **[6]**

OR

Q6) a) Discuss types of tasks are performed by the Gensim library with suitable example. **[9]**

b) Explain Lesk algorithm for word sense disambiguation. **[9]**

Q7) a) Explain the Question Answer system in NLP **[6]**

b) Describe various Machine Translation Approaches. **[6]**

c) Explain Discourse processing with suitable eg. **[5]**

OR

Q8) a) Explain Statistical Machine Translation (SMT) with suitable diagrams and example. **[9]**

b) Explain Natural Language Generation with reference architecture. **[8]**

Total No. of Questions : 8]

SEAT No. : [ ]

PB4442

[Total No. of Pages : 2

[6263]-307

B.E. (Artificial Intelligence and Machine Learning)

DISTRIBUTED SYSTEM

(2019 Pattern) (Semester - VIII) (Elective - V) (418551A)

Time : 2½ Hours] ***[Max. Marks : 70***

Instructions to the candidates:

1) ***Answer Q.1 or Q.2, Q.3 or Q.4, Q.5 or Q.6, Q.7 or Q.8.***
2) ***Neat diagrams must be drawn wherever necessary.***
3) ***Figures to the right indicate full marks.***
4) ***Assume suitable data, if necessary.***

Q1) a) What is Network virtualization? What are the types of overlay networks? Explain the various advantages of overlay networks? **[9]**

b) What is NTP? Describe the working of NTP and discuss the different applications of NTP. **[9]**

OR

Q2) a) What is IPC? Explain with the example of communication between processes using the shared memory. **[9]**

b) What are election algorithms in distributed systems? Describe the bully algorithm step-by-step. **[9]**

Q3) a) What is a replica manager? Describe the key issues in replica management? **[9]**

b) What is a primary-based protocol in a consistency protocol? Explain the working of replicated write protocols with active replication. **[8]**

OR

Q4) a) What is checkpoint-based recovery in a distributed system? Describe in detail the types of checkpointing in distributed systems? **[9]**

b) What is the distribution commit problem? Discuss how this problem is solved using the two-phase commit protocol with suitable diagram. **[8]**

P.T.O.

Q5) a) What is Distributed File System? Describe the different working of Distributed File System. **[9]**

b) What Does Web Proxy Cache Mean? What is the role of proxy server? Explain the various advantages of a proxy server? **[9]**

OR

Q6) a) What is the architecture of traditional web-based system? Explain in detail how does the Web Request Work? **[9]**

b) What is a web server cluster? How does server cluster work? List the different applications of Server clusters. **[9]**

Q7) a) Explain in brief, the key features of Nagios. **[9]**

b) Explain with an appliction (e.g., Travel Booking Service) various key components of Service Oriented Architecture. **[8]**

OR

Q8) a) Explain the following in brief. **[9]**

i) Wearable devices

ii) PVM

iii) JINI

b) Explain in brief, the key features of Prometheus including data model, query language or alerting rules. **[8]**

Total No. of Questions : 8]

SEAT No. :

[Total No. of Pages : 2

PB-4466

[6263]-308

B.E.(Artificial Intelligence & Machine Learning)

SOFTWARE PROJECT AND MANAGEMENT

(2019 Pattern) (Semester - VIII) (418551B) (Elective - V)

Time : 2½ Hours] ***[Max. Marks : 70***

Instructions to the candidates:

1) ***Answer Q1 or Q2, Q3 or Q4, Q5 or Q6, Q7 or Q8.***
2) ***Neat diagrams must be drawn wherever necessary.***
3) ***Figures to the right side indicate full marks.***
4) ***Assume suitable data if necessary.***

Q1) a) Describe the purpose and benefits of using UML diagrams in software development projects. **[8]**

b) What is project evaluation and why is it important in Software Project Management? **[6]**

c) What is Process analysis? Discuss the techniques used for Process analysis. **[4]**

OR

Q2) a) Explain how Cost Benefit Evaluation techniques can be utilized to justify project investments. **[8]**

b) Discuss the significance of Sequence diagrams in the context of Software Project Management. **[6]**

c) What is risk management and why is it important in SPM? **[4]**

Q3) a) Discuss the key components of project tracking and control in software project. **[7]**

b) What is Software Configuration Management. Describe the components of a typical software configuration management system. **[6]**

c) What is a status report and why is it important in Software Project Management? **[4]**

OR

P.T.O

Q4) a) Define Cost Management. Explain four steps of Project Cost Management. **[7]**

b) What is Contract Management. Discuss benefits and challenges of Contract Management. **[6]**

c) Discuss the role of earned value management (EVM) in project tracking and control within software projects. **[4]**

Q5) a) What is the Oldham-Hackman Job Characteristics Model and how does it apply to software project management **[8]**

b) Why is effective decision-making important in software project management? **[6]**

c) How does the organizational structure impact communication and decision making processes in software projects? **[4]**

OR

Q6) a) Discuss the role of organizational culture in shaping project management practices within software development teams. **[8]**

b) What are dispersed and virtual teams and how do they differ from traditional co-located teams in software project management? **[6]**

c) How can ethical considerations influence decision-making processes in software project management? **[4]**

Q7) a) Explain Difference between Microsoft TFS and Azure DevOps? **[7]**

b) Discuss Application Lifecycle Management in Azure DevOps. **[6]**

c) Explain the benefits of adopting ALM practices in software project management. **[4]**

OR

Q8) a) Discuss Agile project Management with Azure DevOps? **[7]**

b) What is Azure DevOps and how does it support ALM in software project management? **[6]**

c) Write Short note on : Metrics in Agile for Project Management **[4]**



Total No. of Questions : 8]

SEAT No. :

PB4443

[Total No. of Pages : 2

[6263]-309
B.E. (AI & ML)
COMPUTER VISION
(2019 Pattern) (Semester-VIII) (Elective-V) (418551 C)

Time : 2½ Hours] *[Max. Marks : 70*

Instructions to the candidates:

1) ***Answer Q.1 or Q.2, Q.3 or Q.4, Q.5 or Q.6, Q.7 or Q.8.***
2) ***Draw neat diagrams and assume suitable data wherever necessary.***
3) ***Figures to the right side indicate full marks.***

Q1) a) Explain the concept of feature descriptors and their role in feature matching. **[9]**

b) Discuss different methods for edge editing and enhancement, such as sharpening and smoothing. **[9]**

OR

Q2) a) Discuss how feature matching is applied in image stitching for panoramic views. **[9]**

b) Describe how edge editing and enhancement can be used in photography and cinematography. **[9]**

Q3) a) Discuss the impact of noise and edge detection accuracy on line detection using the Hough Transform. **[9]**

b) Discuss the advantages and limitations of using a graph-theoretic approach for object location. **[8]**

OR

Q4) a) Explain the Hough-based schemes for circular object detection and how they operate. **[9]**

b) Discuss the Challenges of using GHT for feature collation in complex scenes. **[8]**

P.T.O.

Q5) a) Explain the difference between perspective projection and orthographic projection. How do these projection schemes impact 3D vision applications? **[9]**

b) Explain how shape from texture can be used to infer depth and 3D shapes in an image. **[9]**

OR

Q6) a) Compare structured lighting with other depth estimation methods such as stereo vision and time-of-flight. **[9]**

b) Describe the applications of 3D reconstruction in industries such as architecture. entertainment, and medicine. **[9]**

Q7) a) Discuss face recognition methods such as Eigenfaces and active appearance models and how they are used in photo albums. **[9]**

b) Explain how intelligent photo editing tools utilize computer vision techniques to improve image quality. **[8]**

OR

Q8) a) Explain how content-based image retrieval (CBIR) systems can enhance image search in photo albums. **[9]**

b) Discuss the significance of foreground-background separation in surveillance and its applications. **[8]**



Total No. of Questions : 8]

SEAT No. :

[Total No. of Pages : 2

PB-4483

[6263]-310

B.E.(Artificial Intelligence and Machine Learning)

REINFORCEMENT LEARNING

(2019 Pattern) (Semester - VIII) (418552A) (Elective - VI)

Time : 2½ Hours] *[Max. Marks : 70*

Instructions to the candidates:

1) ***Answer Q1 or Q2, Q3 or Q4, Q5 or Q6, Q7 or Q8.***
2) ***Neat diagrams must be drawn wherever necessary.***
3) ***Figures to the right side indicate full marks.***
4) ***Assume suitable data if necessary.***

Q1) a) Explain the policy evaluation related to Monte-Carlo method. **[6]**

b) Write a note on TD prediction. **[6]**

c) What is a Q-learning and also explain Games and after states in detail. **[6]**

OR

Q2) a) Explain in short R-learning, off policy learning. **[6]**

b) Write a note on Optimality of TD. **[6]**

c) Explain in detail roll out in Monte-Carlo method. **[6]**

Q3) a) Explain what is forward and backward views related to Eligibility traces in detail. **[6]**

b) What do you mean by SARSA(lambda). **[6]**

c) Explain n-step TD prediction in detail. **[5]**

OR

Q4) a) Write a note on Q(lambda). **[6]**

b) Write a note on accumulating traces. **[6]**

c) What is TD (lambda) related to Eligibility traces in detail. **[5]**

P.T.O

Q5) a) Explain approximate policy gradient algorithm in detail. **[6]**

b) Write a note on linear function approximation. **[6]**

c) Explain the concepts of REINFORCE algorithm. **[6]**

OR

Q6) a) Explain use of Policy Gradient methods in non-associative learning in detail. **[6]**

b) Explain gradient descent method in Function Approximation. **[6]**

c) Explain the Control algorithm related to Function Approximation. **[6]**

Q7) a) Explain in detail MAXQ framework related Hierarchical RL. **[6]**

b) Write a note on Computational Neuroscience. **[6]**

c) Explain Case study on Elevator dispatching in detail. **[5]**

OR

Q8) a) Explain in detail HAM framework related Hierarchical RL. **[6]**

b) Write a note on Option discovery algorithms. **[6]**

c) Explain Case study on Helicopter piloting in detail. **[5]**



Total No. of Questions : 8]

SEAT No. :

PB-4484

[Total No. of Pages : 2

[6263]-311

B.E. (Artificial Intelligence & Machine Learning)

BIG DATA ANALYTICS

(2019 Pattern) (Semester - VIII) (418552B) (Elective - VI)

Time : 2½ Hours] *[Max. Marks : 70*

Instructions to the candidates:

1) ***Answer Q1 or Q2, Q3 or Q4, Q5 or Q6, Q7 or Q8.***
2) ***Neat diagrams must be drawn wherever necessary.***
3) ***Figures to the right side indicate full marks.***
4) ***Assume suitable data, if necessary.***

Q1) a) Explain Job scheduling in MapReduce with an example. **[6]**

b) What are the needs of MongoDB?Explain in detail. **[6]**

c) Explain shuffle and sort, task execution in MapReduce with a program. **[6]**

OR

Q2) a) What are the Types and formats and features of MapReduce. **[6]**

b) Illustrate the characteristics of MongoDB with example code. **[6]**

c) What is Anatomy of a Map Reduce Job Run? **[6]**

Q3) a) Explain about Hive Shell, Hive Services, Hive Meta store. **[6]**

b) Write short notes on HBasics, Hbase, RDBMS, Big SQL. **[6]**

c) Explain Pig with Database, grunt, Pig Latin. **[5]**

OR

Q4) a) What is PIG in Hadoop Eco System? Explain the different execution modes of PIG. **[6]**

b) Explain the main components of Apache Hive and how do they interact with each other? **[6]**

c) Explain the key features and characteristics of HBase that differentiate it from traditional relational databases. **[5]**

P.T.O.

Q5) a) Explain Various types of plots drawn in R programming, Appropriate Graph in R **[6]**

b) Compare Exploratory Data Analysis, Linear (Multiple Regression) Models. **[6]**

c) Explain Conditional Independence in Graphs. **[6]**

OR

Q6) a) Illustrate with necessary examples about R Graphical Models, Types, Conditional Independence in Graphs. **[6]**

b) Explain Analysis of Variance. **[6]**

c) Explain R graphical model with example. **[6]**

Q7) a) Compare and contrast Spark and Cassandra. **[6]**

b) Explain about Xplenty in detail. **[6]**

c) Explain Streaming Analytics and Rise of AI-Powered Bigdata Analytics. **[5]**

OR

Q8) a) What do you understand by DataOps for Data. **[6]**

b) What do you understand by Real time Analytics? **[6]**

c) What are the recent trends in Bigdata? Explain in detail. **[5]**

Total No. of Questions : 8]

SEAT No. :

PB-4485

[Total No. of Pages : 2

[6263]-312

B.E.

ARTIFICIAL INTELLIGENCE AND MACHINE LEARNING

Artificial Intelligence Using R Programming

(2019 Pattern) (Semester - VIII) (Elective - VI) (418552C)

Time : 2½ Hours] ***[Max. Marks : 70***

Instructions to the candidates:

1) ***Answer Q.1 or Q.2, Q.3 or Q.4, Q.5 or Q.6, Q.7 or Q.8.***
2) ***Neat diagrams must be drawn wherever necessary.***
3) ***Figures to the right side indicate full marks.***
4) ***Assume suitable data, if necessary.***

Q1) a) What is a numeric variable and how is it different from a categorical variable? **[6]**

b) Explain the terms : **[6]**

i) Variance

ii) Standard deviation

c) Write a note on : **[6]**

i) Mean

ii) Median

iii) Mode

OR

Q2) a) What types of graphs can be used to represent univariate data? **[6]**

b) State and explain the formulas used to calculate covariance and correlation. **[6]**

c) Explain the Terms : **[6]**

i) Quantiles and

ii) Percentiles

P.T.O.

Q3) a) What are the advantages and disadvantages of using barplots versus pie charts for categorical data visualization? **[6]**

b) Define a histogram and explain how it differs from a barplot. **[6]**

c) Explain with example how to read Box and Whisker plot. **[5]**

OR

Q4) a) Discuss the significance of bin width in histograms. **[6]**

b) How does classical probability differ from empirical probability? **[6]**

c) How to make a Side by Side Boxplot in R? **[5]**

Q5) a) Differentiate between confidence intervals and prediction intervals in the context of regression analysis. **[6]**

b) What is coefficient of determination? What does the coefficient of determination tell you? **[6]**

c) How to create a column with binary variable based on a condition of other variable in an R data frame? **[6]**

OR

Q6) a) What is a linear regression model and how is it used in statistical analysis? **[6]**

b) Explain the process of estimating the intercept and slope parameters. **[6]**

c) What is coefficient of significance? How to know if coefficients are significant? **[6]**

Q7) a) Explain what the Omnibus F-test evaluates in a multiple linear regression model. **[6]**

b) Explain the process of finding confidence intervals. **[6]**

c) Explain how stepwise regression is implemented in R and its purpose. **[5]**

OR

Q8) a) Describe how to implement support vector machine algorithm using R? **[6]**

b) Discuss how AdaBoost improves model performance. **[5]**

c) What are the advantages of using random forests over simple decision trees and how are they implemented in R? **[6]**

Total No. of Questions : 8]

SEAT No. : ____

PB-2453

[Total No. of Pages : 2

[6263]-313

B.E. (Automation and Robotics)

INDUSTRIAL AUTOMATION AND CONTROL SYSTEMS

(2019 Pattern) (Semester - VII) (402541)

Time : 2½ Hours] ***[Max. Marks : 70***

Instructions to the candidates:

1) ***Answer four questions from the following.***
2) ***Draw neat labeled diagrams wherever necessary.***
3) ***Figures to the right side indicate full marks.***
4) ***Use of non programmable electronic calculator is permitted.***
5) ***Assume Suitable/Standard data if necessary.***

Q1) a) Draw a neat sketch indicating the construction of pneumatic system. Explain the use of "AND" logic gates in pneumatics with a neat sketch. **[10]**

b) Explain the function of Proportional-Derivative (PD) controller and Proportional-Integral (PT) controller with neat sketch. **[8]**

OR

Q2) a) Discuss the functions of various components involved pneumatic system. Explain the use of "OR" logic gates in pneumatics with a neat sketch.**[10]**

b) Explain the construction and working of sequencing pneumatic circuit with a neat sketch. **[8]**

Q3) a) Explain the Closed loop control system with a neat sketch and give their advantages and disadvantages. **[10]**

b) Using the following set of equations, construct a signal flow graph. **[7]**

$x_2 = x_1 + ax_5$

$x_3 = bx_2 + cx_4$

$x_4 = dx_2 + ex_3$

$x_5 = fx_4 + gx_3$

$x_6 = x_5$

P.T.O.

OR

Q4) a) Explain the various components used in control system. Describe how these components are necessary in a robot control systems. **[10]**

b) Simplify the block diagram using block diagram reduction rules and calculate the transfer function. **[7]**

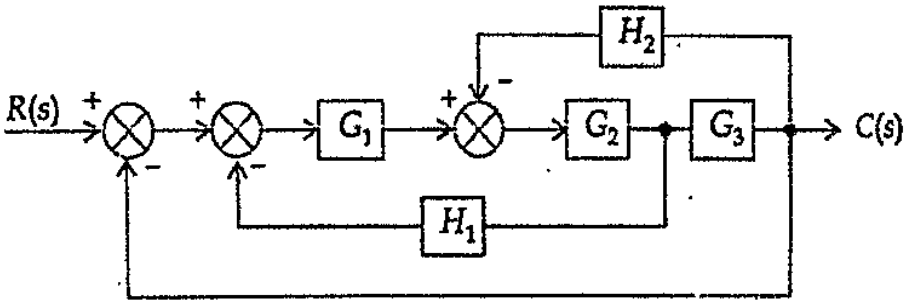

Q5) a) Derive the relation of relay function for stability analysis in non-linear systems. **[10]**

b) Explain the characteristics of non-linear system. Define singular points and give their classification. **[8]**

OR

Q6) a) Define the asymptotic stability and instability. Explain the criterion of the stability in non-linear system. **[8]**

b) Derive the relation of deadzone function for stability analysis in non-linear systems. **[10]**

Q7) a) Describe automated systems. Explain the benefits and challenges of automated systems. **[9]**

b) Define SCADA and HMI. Explain the functions of SCADA and HMI. **[8]**

OR

Q8) a) Explain how the automation is beneficial in large scale control system with the help of examples. **[8]**

b) Explain SCADA with neat block diagram and define each level involved in it. **[9]**

Total No. of Questions : 8]

SEAT No. : [ ]

PB2454

[Total No. of Pages : 2

[6263]-314

B.E. (Automation and Robotics)

ROBOTIC PROCESS AUTOMATION AND DEVELOPMENT

(2019 Pattern) (Semester - VII) (402542)

Time : 2½ Hours] ***[Max. Marks : 70***

Instructions to the candidates:

1) ***Answer any four questions from the following.***
2) ***Draw neat labeled diagrams wherever necessary.***
3) ***Figures to the right side indicate full marks.***
4) ***Use of non-programmable electronic calculator is permitted.***
5) ***Assume Suitable/Standard data if necessary.***

Q1) a) What are some common data manipulation activities that RPA bots can perform in business automation? **[8]**

b) Explain the concept of data scraping in RPA. What types of data sources can be scraped? **[9]**

OR

Q2) a) What are the key advantages of using RPA for data manipulation tasks compared to manual methods? **[8]**

b) Distinguish between Desktop and Web Recording. **[9]**

Q3) a) What are Citrix recording methods in RPA, and when would you use each of them? **[9]**

b) Explain the concept of “Anchors” in the context of data extraction. How are they used in RPA processes? **[9]**

OR

Q4) a) Write a sequence of a project for extracting input data from a excel sheet which needs to be filled on a web portal of a company. **[9]**

b) What are the primary benefits of incorporating AI and ML capabilities into RPA workflows? **[9]**

P.T.O.

Q5) a) Explain the different types of bots used in Robotic Process Automation (RPA). Provide a brief description of each type and highlight their specific functions and applications. **[8]**

b) Define the terms "image trigger" and "element trigger" in the context of RPA. Explain how they differ and provide a real-world scenario where each type of trigger might be preferred over the other? **[9]**

OR

Q6) a) Outline the best practices for effectively utilizing debugging tools to streamline RPA development processes? **[8]**

b) "Exceptions are a critical aspect of Robotic Process Automation (RPA) development. Discuss the role of exceptions in RPA, and provide examples of common exceptions that RPA developers encounter. **[9]**

Q7) a) Explain the steps involved in deploying RPA bots within an organization. Discuss how these steps ensure a smooth integration with existing systems and processes. **[9]**

b) Explain the concept of "Bot Orchestration" and how it impacts the deployment of RPA bots in an enterprise. **[9]**

OR

Q8) a) What are the scalability challenges in RPA? How can an organization effectively scale its RPA bot deployment? **[9]**

b) What emerging technologies or trends are likely to impact the deployment and maintenance of RPA bots in the near future? Provide examples and potential implications. **[9]**



Total No. of Questions : 6]

SEAT No. :

PB-2455

[Total No. of Pages : 2

[6263]-315

B.E. (Automation and Robotics)

ARTIFICIAL NEURAL NETWORKS AND DEEP LEARNING

(2019 Pattern) (Semester - VII) (402543)

Time : 2 Hours] ***[Max. Marks : 50***

Instructions to the candidates:

1) ***Answer four questions from the following.***
2) ***Draw neat labeled diagrams wherever necessary.***
3) ***Figures to the right side indicate full marks.***
4) ***Use of non programmable electronic calculator is permitted.***
5) ***Assume Suitable/Standard data if necessary.***

Q1) a) Elaborate on the different activation functions employed within neural networks. **[8]**

b) Compose a comparison between Binary Neural Networks (BNN) and Artificial Neural Networks (ANN). **[8]**

OR

Q2) a) What is the definition of a neural network? How many layers are required for it to be referred to as a deep neural network. **[8]**

b) Which deep learning model employs the back-propagation method, and what are the learning techniques linked to back propagation. **[8]**

Q3) a) Explain the structure and functioning of Hopfield networks and what are the limitations of Hopfield networks. **[8]**

b) What is Adaptive Resonance Theory (ART) network, and how do they differ from traditional Competitive Learning (CL) network in terms of learning and adaptability. **[9]**

OR

Q4) a) How is error performance measured in Hopfield networks, and what factors influence their ability to recall stored patterns accurately. **[8]**

P.T.O.

b) What are the key properties of a feature map in the context of Self-Organization Maps (SOM), and how do they contribute to the organization of input data. **[9]**

Q5) a) Describe the typical architecture of a CNN, including the arrangement of convolution, pooling, and fully connected layers. **[8]**

b) How Artificial Neural Networks (ANN) are utilized in texture classification and segmentation tasks. What are the challenges in these tasks. **[9]**

OR

Q6) a) What are the fundamental building blocks of a Convolutional Neural Network (CNN), and how do they contribute to its architecture. **[8]**

b) How can Artificial Neural Networks (ANN) be applied to recognize Olympic Games symbols? Explain the key components of such a system. **[9]**

Total No. of Questions : 8]

SEAT No. :

PB-2456

[Total No. of Pages : 2

[6263]-317
B.E.(Automation and Robotics)
Microprocessors and microcontrollers
(2019 Pattern) (Semester - VII) (402544B) (Elective - III)

Time : 2½ Hours] ***[Max. Marks : 70***

Instructions to the candidates:

1) ***Answer four questions from the following.***
2) ***Draw neat labelled diagrams wherever necessary.***
3) ***Figures to the right side indicate full marks.***
4) ***Use of non programmable electronic calculator is permitted.***
5) ***Assume suitable / standard data if necessary.***

Q1) a) Explain the 8 Steps of interrupt process in 8085. **[8]**

b) Draw and explain main types of 8085 interrupts and respective vector locations. **[9]**

OR

Q2) a) Explain SIM & RIM instruction. **[8]**

b) Explain the Multiple Interrupts and Priority Encoder with neat Diagram. **[9]**

Q3) a) Explain Basic concept of 3-bit ADC and 3-bit DAC converter using neat diagrams. **[9]**

b) Design a multiplexed seven-segment LED display system schematic using the 8085 Microprocessor along with the 8255 programmable peripheral interface (PPI). Provide a detailed explanation of the circuit diagram and components used. **[9]**

OR

Q4) a) Write a program to dispaly the message μp – rdy (microproccessor - ready) using 8255 PPI and MPU and descirbe it. **[9]**

b) Explain the principles of analog-to-digital conversion. Describe the key features and characteristics of ADC 0808. Provide a detailed schematic diagram illustrating the interfacing of an ADC 0808 with a microprocessor 8085, highlighting all essential connections and components. **[9]**

P.T.O

Q5) a) Provide a labeled diagram of the pin configuration for an 8051 Microcontroller. Explain the functions of at least five essential pins. **[8]**

b) Provide an overview of the instruction set of the 8051 Microcontroller. How do instructions differ in terms of their functionality? **[9]**

OR

Q6) a) Write at least 8 differences between a microprocessor and a microcontroller. **[8]**

b) Draw and explain 8051 Block diagram. Also write features of 8051 Microcontroller. **[9]**

Q7) a) Explain the interrupt structure of the 8051 Microcontroller. How do different types of interrupts work? **[9]**

b) Write in detail about the interfacing of LCD with 8051 Microcontroller and draw its neat connection diagram. **[9]**

OR

Q8) a) Explore the various modes of operation for the parallel port in the 8051 Microcontroller. How do these modes allow the Microcontroller to interact with external devices? **[9]**

b) Explain the role of the "IE' (Interrupt Enable) and "IP" (Interrupt Priority) registers in the 8051. **[9]**



Total No. of Questions : 8]

SEAT No. :

PB-2457

[Total No. of Pages : 2

[6263]-318

B.E.(Automation & Robotics)

MODERN MACHINING PROCESSES

(2019 Pattern) (Semester - VII) (402544C) (Elective - III)

Time : 2½ Hours] *[Max. Marks : 70*

Instructions to the candidates:

1) ***Answer Q1 or Q2, Q3 or Q4, Q5 or Q6, Q7 or Q8***
2) ***Neat diagrams must be drawn wherever necessary.***
3) ***Assume suitable data if necessary***
4) ***Use of Non-programmable scientifc calculators is allowed.***
5) ***Figures to the right indicate full marks.***

Q1) a) Explain Electrochemical Machining with neat sketch. **[5]**

b) Explain advantages, disadvantages and applications of Electrochemical Grinding. **[6]**

c) Explain electro stream drilling with neat sketch. **[6]**

OR

Q2) a) Explain difference between Conventional Grinding and Electrochemical Grinding. **[5]**

b) Explain step by step working of Photochemical Machining. **[6]**

c) Explain working principle of Chemical Machining Process. **[6]**

Q3) a) Explain the working principle of EDM Machining. **[7]**

b) Explain the components of a wire EDM machine. **[5]**

c) Explain the working principle of Electric Discharge Grinding. **[6]**

OR

Q4) a) Explain Electric Discharge Diamond Grinding with neat sketch. **[5]**

b) Explain Process Parameters of Electric Discharge Machine. **[6]**

c) Write Process Parameters of Electrochemical discharge machining (ECDM). **[7]**

P.T.O

Q5) a) Explain Diamond turn machining and its working principle with neat sketch. **[5]**

b) Explain the effect of process parameters and materials processed in micro turning. **[6]**

c) Explain the applications of micro milling. **[6]**

OR

Q6) a) Explain the effect of process parameters and materials processed in Micro Engraving. **[6]**

b) Explain Micro milling, its working principle and material removal mechanism. **[5]**

c) Explain Micro drilling, its working principle and material removal mechanism. **[6]**

Q7) a) Write a note on micro and nano technology. **[6]**

b) Write short note on MEMS (Micro-Electro-Mechanical Systems) and NEMS (Nano-Electro-Mechanical Systems). **[6]**

c) Write short note on Microelectronics. **[6]**

OR

Q8) a) Explain the relationship between Microsystems and microelectronics. **[6]**

b) Explain dry etching in Micro and Nano fabrication. **[6]**

c) Write short note on photolithography process. **[6]**



Total No. of Questions : 8]

SEAT No. :

PB-2458

[Total No. of Pages : 2

[6263]-319

B.E.(Automation & Robotics Engineering)

INDUSTRIAL ENGINEERING

(2019 Pattern) (Semester - VII) (402544D) (Elective - III)

Time : 2½ Hours] ***[Max. Marks : 70***

Instructions to the candidates:

1) ***Answer Q1 or Q2, Q3 or Q4, Q5 or Q6, Q7 or Q8***
2) ***Neat diagrams must be drawn wherever necessary.***
3) ***Assume suitable data if necessary***
4) ***Use of Non-programmable scientific calculators is allowed.***
5) ***Figures to the right indicate full marks.***

Q1) a) What do you mean by plant Location? Mr. Vishal wants to start his newplant, for this suggests which are the different factors that he should consider while selecting location for his new plant? **[6]**

b) Explain process layout with suitable sketch. **[6]**

c) Explain types of material flow patterns to achieve optimum flow of materialin the plant? **[5]**

OR

Q2) a) Explain the term material handling equipment's? Elaborate any four different types of material handling equipment's with suitable applications? **[9]**

b) Compare product layout and Process Layout and explain factors affect while selecting plant layout? **[8]**

Q3) a) Explain the term Line Balancing with its objectives? Compare Job Production and Batch Production? (any 4 points). **[9]**

b) List any six functions of production planning and control. **[9]**

Past data on the sale of Diesel engines for the last 12 years is given below. By the method of three yearly moving averages establish the trendvalues and forecast demand for 13th year. If the actual demand for 13th year is 540 nos. What shall be the forecast of 14th year? Take value of smoothing constant is 0.3

Year	1	2	3	4	5	6	7	8	9	10	11	12
Sales Numbers	335	350	330	340	380	410	430	440	430	460	500	560

P.T.O

OR

Q4) a) What is demand forecasting? What are applications of demand forecasting? Explain Moving average method of demand forecasting. **[9]**

b) Explain functions of Production Planning and Control. **[9]**

Q5) a) Elaborate role of materials management in cost reduction and value improvement? Also explain the term "ABC analysis". **[9]**

b) Explain vendor rating system with vendor rating criteria? Also explain objectives of JIT. **[9]**

OR

Q6) a) What is inventory control? Explain **[9]**

i) MRP - I

ii) ERP with different module

b) Explain at least 3 inventory control modules in detail. **[9]**

Q7) a) What is "value analysis"? Explain types of value? **[6]**

b) Explain Rapid Entire Body Assessment (REBA) with level of MSD risk. **[6]**

c) Write a short note on "KRA"? **[5]**

OR

Q8) a) Elaborate the term "merit rating"? Explain any 4 methods of merit rating? **[9]**

b) Define job evaluation? What are its objectives? Explain procedure of job evaluation? **[8]**



Total No. of Questions : 8]

SEAT No. :

PB2459

[Total No. of Pages : 2

[6263]-321

B.E. (Automation and Robotics Engineering)

LEAN MANUFACTURING

(2019 Pattern) (Semester - VII) (402545 A) (Elective - IV)

Time : 2½ Hours] *[Max. Marks : 70*

Instructions to the candidates:

1) ***Answer Q.1 or Q.2, Q.3 or Q.4, Q.5 or Q.6, Q.7 or Q.8.***
2) ***Neat diagrams must be drawn wherever necessary.***
3) ***Assume suitable data if necessary.***
4) ***Use of non-programmable scientific calculator is allowed.***
5) ***Figures to the right side indicate full marks.***

Q1) a) What do you mean by Totoal Productive Maintenance? Elaborate it's objectives. **[8]**

b) Enumerate different types of Poka-Yoke devices. **[9]**

OR

Q2) a) Write short note on pillars of TPM. **[8]**

b) Briefly explain how equipment reliability can be improved by implementing TMP? **[9]**

Q3) a) Discuss cellular manufacturing, Elaborate benefits and characteristics of cellular manufacturing. **[9]**

b) Elaborate different Lean tools in Six Sigma process improvement. **[9]**

OR

Q4) a) How DMAIC methodology in lean Six Sigma projects? Discuss with example. **[9]**

b) Write short note on Supplier managment and partnership in lean supply chain management. **[9]**

Q5) a) Briefly explain the role of leaders in lean organizations. **[8]**

b) Explain Key performance indicators (KPIs) in lean manufacturing. **[9]**

OR

P.T.O.

Q6) a) Write short note on Team dynamics and collaboration in lean environments. **[8]**

b) Explain in detail Lean metrics and data collection. **[9]**

Q7) a) Write short note on Developing a lean implementation plan. Explain with appropriate example. **[9]**

b) Discuss lessons learned from lean case studies in actual implementation. **[9]**

OR

Q8) a) Briefly explain any one case study of lean implementation in manufacturing. **[9]**

b) Analysis of successful lean manufacturing implementations. Discuss. **[9]**

Total No. of Questions : 8]

SEAT No. :

PB2460

[Total No. of Pages : 2

[6263]-324
B.E. (Automation & Robotics)
ADDITIVE MANUFACTURING
(2019 Pattern) (Semester - VII) (402545 C) (Elective - IV)

Time : 2½ Hours] *[Max. Marks : 70*

Instructions to the candidates:

1) ***Answer Q.1 or Q.2, Q.3 or Q.4, Q.5 or Q.6, Q.7 or Q.8.***
2) ***Neat diagrams must be drawn wherever necessary.***
3) ***Figures to the right side indicate full marks.***
4) ***Assume suitable data if necessary.***

Q1) a) Explain the post processing steps followed in fused deposition modeling. Discuss the possible defects in this method. **[9]**

b) Explain the working principle of binder jetting with neat sketch. Discuss their advantages, disadvantages and applications. **[9]**

OR

Q2) a) Explain the construction and working principle of direct ink writing with neat sketch. Also write merits, demerits and applications. **[9]**

b) Explain the process polyjet printing. Also write the applications, mertis and demerits. **[9]**

Q3) a) Explain phase transformation of additive manufacturing. **[8]**

b) List out the different types of materials used in 3D printing. Explain how the material selection can be made for fabricating specific components with the help of examples. **[9]**

OR

Q4) a) Discuss the various techniques used to enhance the surface properties of additively manufactured parts. **[8]**

b) Explain the various design considerations/rules involved in additive manufacturing with the help suitable sketch. **[9]**

Q5) a) Explain the functions of sensors, actuators, motors and control electronics used in construction of 3D printers. **[9]**

b) Define slicing and their types. Explain the various infill strategies used for area filling the sliced model. **[9]**

OR

P.T.O.

Q6) a) Write note on **[9]**

i) cooling system of 3D printer

ii) print bed of 3D printer

iii) 3D printer frame.

b) Explain the steps followed while slicing a CAD model in slicing software along software integration. **[9]**

Q7) a) Discuss in brief on how the additive manufacturing is going to be a game changer in automobile and aerospace industries. **[9]**

b) How additive manufacturing can influence the mass customization? Explain in detail mentioning its future trends. **[8]**

OR

Q8) a) Discuss the reasons on how additive manufacturing influenced the growth in the production of stents used in biomedical applications. **[9]**

b) Explain the advantages and challenges involved in adopting the additive manufacturing technology in art, fashion and jewelry industry. **[8]**

Total No. of Questions : 8]

SEAT No. :

PB2461

[Total No. of Pages : 2

[6263]-326

B.E. (Automation & Robotics Engineering)

AUGMENTED REALITY AND VIRTUAL REALITY

(2019 Pattern) (Semester - VII) (402545 E) (Elective - IV)

Time : 2½ Hours] *[Max. Marks : 70*

Instructions to the candidates:

1) ***Answser Q.1 or Q.2, Q.3 or Q.4, Q.5 or Q.6, Q.7 or Q.8.***
2) ***Neat diagrams must be drawn wherever necessary.***
3) ***Figures to the right side indicate full marks.***
4) ***Assume suitable data if necessary.***

Q1) a) How do AC magnetic trackers function? How is their accuracy affected by the presence of metal objects and distance from the source? **[6]**

b) What are differences between older head-mounted displays (HMDs) and newer face-mounted displays (FMDs) in terms of ergonomics and optics? **[6]**

c) What is the difference between local and global illumination? How can global illumination be made interactive? **[5]**

OR

Q2) a) What is the difference between an absolute and a relative position input device? **[6]**

b) What is relationship between HMD field of view and resolution, and why is it important? **[6]**

c) What is the 5DT Data Glove and how does it function? **[5]**

Q3) a) What are the features of augmented reality in education? **[6]**

b) What's the difference between AR and VR? **[6]**

c) How do augmented reality applications enhance the real world? **[5]**

OR

Q4) a) What are the challenges with augmented reality? **[6]**

b) What are the technologies used in augmented reality? **[6]**

c) Which are the evaluation method of AR? **[5]**

P.T.O.

Q5) a) Which are the main stages of a VR human factor study? **[6]**

b) What are the somatic senses in VR? **[6]**

c) Which hardware is used in VR? Explain. **[6]**

OR

Q6) a) Explain the VR system architecture? **[6]**

b) Which are the four components of VR? Explain in brief. **[6]**

c) What is a head coupled display in virtual reality? **[6]**

Q7) a) What is the PreOp bronchoscopy training simulator? What did the Colt et al. [2001] study show aboutits training efficacy? **[6]**

b) How does virtual colonoscopy differ from a real colonoscopy? **[6]**

c) Why are nurses' IV procedure skills important? Describe the CathSim training system, including the type of patients it can simulate. **[6]**

OR

Q8) a) What is anastomosis, and how can it be taught in VR? **[6]**

b) How is laparoscopy training done with MIST-VR? Is the system able to measure skill? Give examples. **[6]**

c) What is telerehabilitation, and how was it realized for orthopedic patients? **[6]**

Total No. of Questions : 8]

SEAT No. :

PB-2462

[Total No. of Pages : 2

[6263]-327

B.E. (Automation and Robotics)

EMBEDDED SYSTEMS IN ROBOTS

(2019 Course) (Semester - VIII) (402549)

Time : 2½ Hours] *[Max. Marks : 70*

Instructions to the candidates :

1) ***Answer four questions from the following.***
2) ***Draw neat labeled diagrams wherever necessary.***
3) ***Figures to the right side indicate full marks.***
4) ***Use of non programmable electronics calculator is permitted.***
5) ***Assume suitable data, if necessary.***

Q1) a) Write down the difference between serial and parallel communication. **[6]**

How do you differentiate with network protocol and standards explain with proper example. **[4]**

[10]

b) Name any 4 serial communication protocol. **[2]**

Explain any two of them with proper diagram. **[6]**

[8]

OR

Q2) a) Explain the 7 layers of the OSI Model with proper neat diagram. **[8]**

b) Write a short note on : **[10]**

i) Zigbee Protocol ii) IrDA

Q3) a) Describe the functions of each pins of AT mega 8 microcontroller. **[10]**

b) Write down the difference between RISC & CISC processors. **[7]**

OR

Q4) a) Write the differences between Microprocessor & Microcontroller. **[5]**

Mention any 5 features and application of AVR microcontroller. **[5]**

[10]

b) Explain the timers & ports of AT mega 8 microcontroller. **[7]**

P.T.O.

Q5) a) What is Arduino IDE? Write any 5 key features of it. **[5]**
Explain the difference between digital & analog pins on an arduino board. **[5]**
[10]

b) Explain the following functions : **[8]**

i) PinMode()
ii) DigitalRead()
iii) digitalWrite()
iv) analogRead()
v) analogReference()
vi) analogWrite()
vii) serial.begin()
viii) serial.print()
x) serial.println()

OR

Q6) a) Describe the structure of an Arduino sketch (program) and explain the purpose of setup () and loop () functions. **[9]**

b) Write the difference between I2C & SPI with neat diagram. **[9]**

Q7) a) Draw interfacing diagram of Atmega328 based Arduino board with LED & write the program to blink the LED in every 3 secs. **[8]**

b) Write the arduino program code for interfacing of Relay Driver with arduino & draw the interfacing circuit. **[9]**

OR

Q8) a) Write the arduino program code for interfacing accelerometer with Arduino. **[9]**

b) What is LCD? Draw interfacing diagram of Arduino board with LCD & write the program to display a message on LCD. **[8]**

▽▽▽▽

Total No. of Questions : 8]

SEAT No. :

PB2463

[Total No. of Pages : 2

[6263]-328

B.E.(Automation and Robotics)

FUNDAMENTALS OF AUTONOMOUS SYSTEMS

(2019 Pattern)(Semester - VIII)(402550)

Time : 2½ Hours] *[Max. Marks :70*

Instructions to the candidates:

1) ***Answer four questions from the following.***
2) ***Draw neat labeled diagrams wherever necessary.***
3) ***Figures to the right indicate full marks.***
4) ***Use of non programmable electronic calculator is permitted.***
5) ***Assume Suitable/Standard data if necessary.***

Q1) a) Explain how uncertainty in sensor data and environmental dynamics can impact decision making in autonomous systems. What strategies can be employed to mitigate the effects of uncertainity? **[10]**

b) Provide an overview of decision-making architectures commonly used in autonomous systems. What are the key components and their respective roles within these architectures? **[8]**

OR

Q2) a) Provide examples of real-world applications where decision-making algorithms play a critical role in autonomous systems,such as self-driving cars, drones , or robotic systems. **[8]**

b) Discuss the importance of trajectory generation in autonomous systems. How do trajectory generation algorithms account for dynamics and constraints of the system? **[10]**

Q3) a) Describe the functionality of PID controllers in autonomous systems. How do proportional integral derivative work to regulate system behavior? **[10]**

b) Provide examples of real-world applications where machine learning has significantly improved the autonomy and efficiency of autonomous systems. **[7]**

OR

P.T.O.

Q4) a) Discuss the challenges and limitations associated with the integration of machine learning techniques into autonomous systems. How can these challenges be addressed? **[10]**

b) Provide an overview of machine learning and its relevance to autonomous systems. How does machine learning contribute to improving system autonomy and performance? **[7]**

Q5) a) Discuss the role of real-time communication in autonomous systems. What are the challenges associated with achieving low-latency communication, and how can these challenges be addressed? **[10]**

b) Discuss the importance of simulations in the development and testing of autonomous systems. How do simulations facilitate rapid prototyping and evaluation of system performance? **[8]**

OR

Q6) a) Describe the design principles for creating intuitive and user-friendly interfaces for autonomous systems. How can these principles improve user experience and system acceptance? **[9]**

b) What are the key communication requirements in autonomous systems and how do they influence system design and operation? **[9]**

Q7) a) Discuss the safety challenges associated with autonomous systems. What are the potential risks and hazards posed by autonomous operations and how can these risks be mitigated? **[8]**

b) Explain the applications and capabilities of autonomous drones and Unmanned Aerial Vehicles (UAVs). How are these vehicles utilized in various industries and sectors? **[9]**

OR

Q8) a) Explain the importance of fail-safe mechanisms and redundancy in ensuring the reliability of autonomous systems. How do these mechanisms prevent system failures and accidents? **[9]**

b) Discuss the privacy concerns raised by autonomous systems, especially regarding the collection and utilization of personal data. How can privacy-preserving mechanisms be implemented to protect individuals privacy rights? **[8]**

Total No. of Questions : 8]

SEAT No. :

PB-4467

[Total No. of Pages : 2

[6263]-331

B.E.(Automation and Robotics Engineering)

PRODUCT DESIGN AND DEVELOPMENT

(2019 Pattern) (Semester - VIII) (402045A) (Elective - V)

Time : 2½ Hours] *[Max. Marks : 70*

Instructions to the candidates:

1) ***Solve Q1 or Q2, Q3 or Q4, Q5 or Q6, Q7 or Q8.***
2) ***Neat diagrams must be drawn wherever necessary.***
3) ***Figures to the right side indicate full marks.***
4) ***Use of electronic pocket calculator is allowed.***
5) ***Assume suitable data if necessary.***

Q1) a) Explain Pugh's chart with example. **[7]**

b) Write note on Economic Analysis. **[6]**

c) Write a short note on SWOT analysis for a selection of profitable product. **[4]**

OR

Q2) a) Explain Product Characteristics. **[7]**

b) Describe in detail Concept Selection Process. **[6]**

c) Write note on Alternate thinking in idea generation approach. **[4]**

Q3) a) Describe in detail Design review/part Print Analysis. **[7]**

b) Explain Qualitative & Quantitative Economic Analysis. **[6]**

c) Write a short note on arrangement of Dimensions. **[4]**

OR

Q4) a) Explain BOM with example. **[7]**

b) Explain Value Analysis in detail. **[6]**

c) What is Fit? Describe the types of Fits. **[4]**

P.T.O

Q5) a) Write a short note on Advance Product Quality Planning. **[8]**

b) What is the importance of PLM and PDM for a Designer? **[6]**

c) Enlist Industrial Safety to be consider in Product Design. **[4]**

OR

Q6) a) What is PLM? What are the phases involved in it? **[8]**

b) Explain Aesthetic and aesthetics consideration in product design. **[6]**

c) What are guidelines for Design for Robustness? Discuss. **[4]**

Q7) a) Explain Production Part Approval Process tools in detail. **[8]**

b) Define Purchase Order and Product Costing in vendor development. **[6]**

c) Explain Drawing office procedure in detail. **[4]**

OR

Q8) a) Describe in detail Legal Product of design patents. **[8]**

b) Explain Product Testing and its Validation. **[6]**

c) Describe Organization Structure in detail. **[4]**



Total No. of Questions : 8]

SEAT No. :

PB2464

[Total No. of Pages : 2

[6263]-334

B.E. (Automation and Robotics Engineering)

DATA SCIENCE

(2019 Pattern) (Semester-VIII) (Elective-VI) (402552 A)

Time : 2½ Hours] *[Max. Marks : 70*

Instructions to the candidates:

1) ***Answer four questions from the following.***
2) ***Draw neat labeled diagrams wherever necessary.***
3) ***Figures to the right side indicate full marks.***
4) ***Use of non programmable electronic calculator is permitted.***
5) ***Assume Suitable/Standard data jf necessary.***

Q1) a) What is the primary goal of the Discovery phase in data analytics? **[8]**

b) How does the data analytic lifecycle contribute to effective decision-making in organizations? **[9]**

OR

Q2) a) What role does model planning play in the data analytic lifecycle? **[8]**

b) What does it mean to operationalize findings in the context of the data analytic lifecycle? **[9]**

Q3) a) What is Python and why is it widely used in the field of data science, and list some essential Python libraries for data science and explain their roles? **[9]**

b) How would you replace values in a dataset, and why is this step necessary in data preprocessing? **[9]**

OR

Q4) a) Compare and contrast linear regression and logistic regression, and when is logistic regression more appropriate than linear regression? **[9]**

b) Explain the Naïve Bayes classification algorithm, and its assumptions.**[9]**

P.T.O.

Q5) a) What is the purpose of an elbow plot in clustering, and how is it generated? **[8]**

b) What is the importance of text preprocessing in natural language processing (NLP) and explain the concept of Bag of Words in text analysis. **[9]**

OR

Q6) a) What information does an AUC-ROC curve provide, and how is it interpreted? **[8]**

b) Explain the K-Means clustering algorithm and its steps and what are the advantages and disadvantages of K-Means clustering? **[9]**

Q7) a) Why is data visualization important in the field of data science and differentiate between categorical and numerical data visualizations. **[9]**

b) Explain the purpose of a line plot in data visualization. Provide an example scenario where a line plot is effective in conveying trends or patterns.**[9]**

OR

Q8) a) Discuss the benefits of using a combination of line plots, scatter plots, histograms, density plots, and box plots in a comprehensive data visualization strategy. **[9]**

b) Define a histogram and explain its utility in visualizing the distribution of numerical data. **[9]**

● ● ●

Total No. of Questions : 8]

SEAT No. :

PB-2465

[Total No. of Pages : 2

[6263]-339

B.E. (Robotics and Automation)

MACHINE VISION SYSTEM

(2019 Pattern) (Semester - VII) (411501)

Time : 2½ Hours] *[Max. Marks : 70*

Instructions to the candidates:

1) ***Neat diagrams must be drawn wherever necessary.***
2) ***Figures to the right side indicate full marks.***
3) ***Use of Calculator is allowed.***
4) ***Assume Suitable data if necessary.***

Q1) a) Explain in detail arithmetic mean filters with relevant mathematical equations. **[8]**

b) For the below given 5x4 image find out following : **[10]**

Image :

1 4 5 1 6

6 5 7 0 1

2 0 1 5 1

2 0 1 0 6

i) Probability Density Function (PDF) of each pixel value.

ii) Huffman's Code for each pixel value.

ii) What is the Huffman's code length for highest & lowest probability for pixel and why? Justify your answer.

OR

Q2) a) Why it is important to know compression ratio & signal to noise ratio in any compression technique? Justify your answers? **[5]**

b) Draw & explain degradation model in image compression. **[5]**

P.T.O.

c) Below is the 5 × 3 binary image. **[8]**

Image :

0 0 1 1 1

1 1 1 0 0

0 0 1 1 1

For the given image calculate following:

i) Total number of Run length vectors.

ii) Compression ratio.

iii) Predict if data is compressed? Justify your answer.

Q3) a) How the image is segmented with technique-based approach ? and explain Hybrid technique in detail. **[9]**

b) Write a short note on region-based segmentation technique in detail. **[9]**

OR

Q4) a) Explain approach-based segmentation in image segmentation. **[9]**

b) What do you understand by term clustering in image segmentation? Explain in detail with considering examples. **[9]**

Q5) a) Explain Fourier based alignment in motion estimation & how it is different from hierarchical motion estimation? **[9]**

b) Write a note on windowed correlation motion estimation technique. (expression is mandatory). **[8]**

OR

Q6) a) Write a note on rotation and scale motion estimation techniques with relevant example. **[9]**

b) Write a note on parametric motion estimation techniques. **[8]**

Q7) a) What do you understand by Principle Component Analysis (PCA)? Explain in detail. **[8]**

b) What are deep neural networks and how it can be implemented in humanoid robots? **[9]**

OR

Q8) a) What are convolutional neural networks explain how it is feasible to use in robotics applications. **[8]**

b) Explain in detail unsupervised learning and explain in detail. **[9]**

⌘⌘⌘

Total No. of Questions : 8]

SEAT No. :

PB2466

[Total No. of Pages : 4

[6263]-340

B.E. (Robotics & Automation)

ROBOT SYSTEM RELIABILITY AND SAFETY

(2019 Pattern) (Semester - VII) (411502A)

Time : 2½ Hours] ***[Max. Marks : 70***

Instructions to the candidates:

1) ***Solve Q.1 or Q.2, Q.3 or Q.4, Q.5 or Q.6 and Q.7 or Q.8.***
2) ***Figure to the right indicates full marks.***
3) ***Neat Diagram must be drawn wherever nccessary.***
4) ***Assume Suitable data if necessary.***
5) ***Use of Logarithmic Table, Slide rule and-Electronic pocket calculator is allowed.***

Q1) a) Allocate the reliability of electronic system used in a robotic system which has number of items in subsystem assemblies is 19 and with a goal of reliability for 95%, using AGREE Method of Reliability Allocation. If the given data for the mission is: **[8]**

System Level 1 Subassemblies	Number of Items in Subassembly	Importance Factor	Mission Time of Subassembly
A	4	1	300
B	8	0.8	100
C	1	1	300
D	6	0.9	100

The input data of this electronic system is as follows :

Module	Number of components	Importance Factor
1	4	1
2	8	0.8
3	1	1
4	6	0.9

Also, find the allocated mean time between failures of each subsystem assemblies.

P.T.O.

b) A computer used for controlling robot consists of three sub- system having consecutive failure rates λ1=0.015, λ2=0.0l8, λ3=0.023 failures per month. Select the requirements of reliability through 36 months in service to achieve total reliability as 0.98 using ARINC Method of Reliability Allocation. Also, check if the total reliability goal of computer is achieved. **[9]**

OR

Q2) a) A two-element system model is subjected Markov Analysis having the block diagram given below: **[8]**

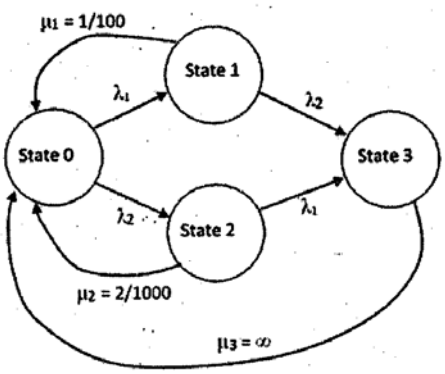

Derive an expression of reliability for this system assuming the elements are independent and are parallel.Also, find the reliability if λ_1= 50E-06 failures per hour, λ_2= 20E-06 failures per hour, μ_1 = 0.001 repairs per hour and μ_2 = 2/1000 repairs per hour. Consider the steady state transition throughout the system.

b) Optimize and allocate the reliability of a robot motors for 4 axis articulated robot using Minimum Effort Method, if cost of all motors should not exceed €8000 : **[9]**

Joint	Component Feasibility	Initial Reliability	Minimum Reliability	Maximum Reliability	Per Unit Cost
J_i	f_i	R_i	$R_{i,min}$	$R_{i,mix}$	C_i
1	0.68	0.985	0.9	0.999	30
2	0.66	0.985	0.9	0.999	30
3	0.66	0.985	0.9	0.999	40
4	0.64	0.98	0.9	0.999	40

Q3) a) Find expression of system probability at each stage using Markov Analysis Method for the 3-unit system having following transition state diagram: **[12]**

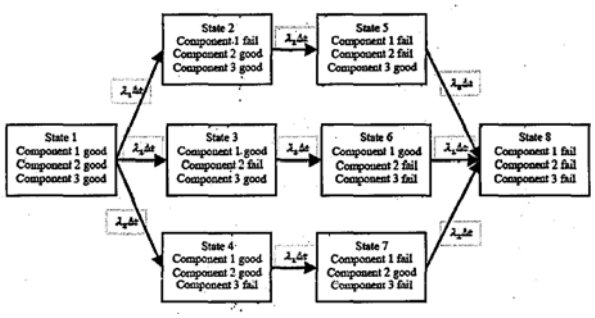

b) Explain Markov Analysis Model for Reliability. **[6]**

OR

Q4) a) Using the decomposition method or conditional probability approach for a mission of 1000 hours, evaluate the reliability of the system having reliability block diagram shown in figure below: **[9]**

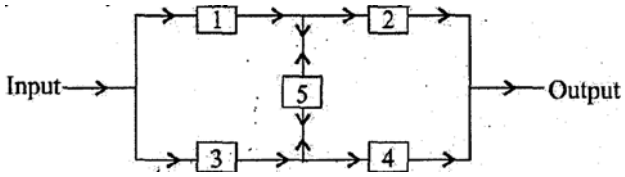

Assume that each component has a reliability of 0.95 for a mission of 1000 hours. Also, assume that the components are independent.

b) A robotic motor system consists of a motor drive and motor joint assembly as subsystems controlling motor system. Both the subsystem must fail in order for the failure of the system. The robot control system will fail if the control panel (CP) (which includes the motor drives) or all four-motor joints fail. The motor subsystem will fail if the motor drive fails (MD_1, MD_2, MD_3 and MD_4) or the Motor Joint assembly fails (events MJ_1, MJ_2, MJ_3, MJ_4). The robotic motor system will fail if the cable system fails (event C) or both arm and wrist motor joint assemblies fail (events MJ_3, MJ_4). Find the reliability relation using decomposition method, if the reliability block diagram of the system is as shown below: **[9]**

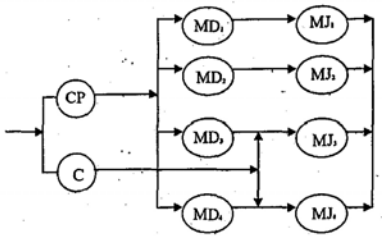

The reliability of the cable is 0.9 and the control panel is 0.92. Find the reliability of the robotic motor system if each subsystem of motor drives has the reliability of 0.95 and of motor joints as 0.85.

Q5) a) Define Risk. Explain various perceptions, criteria, management method and estimation of risk. **[9]**

b) What are Material Safety Data Sheet (MSDS) according to 29 CFR 1910.1200(g) regulation (revised 2012) of Occupational Safety and Health Administration (OSHA)? **[9]**

OR

Q6) a) If sampling was conducted for a worker working with for air contaminant containing heptane for two cases as below:

Case-1 The worker worked for seven hours and the concentration for that seven hour was 500 parts per million (ppm) for a shift of 8 hours. **Case-2** The worker worked for one workspace for 2 hours with 200 ppm exposure and in another workspace for 3 hours with 400 ppm for a shift of 8 hours.

Find time weighted average for both the cases according to OSHA specification. Also check is this exposure is within the safe range if safe range of time weighted average for heptane is 400 ppm as per OSHA.**[9]**

b) Explain the various provisions of occupational safety and health in "Industrial Act 1948" amended in 2017. **[9]**

Q7) a) Differentiate between Unsafe Condition and Unsafe Act with relevant examples and case study. **[8]**

b) Explain RULA and REBA to evaluate musculoskeletal disorder. **[9]**

OR

Q8) a) Explain various kinds of hazards and what are the various methods to avoid, control and measure such hazards. Explain with relevant case study.**[8]**

b) Explain various methods of. Preliminary Hazard Analysis or Risk Assessment. Use relevant case studies to explain various methods. **[9]**



Total No. of Questions : 8] **SEAT No. :**

PB-2467

[Total No. of Pages : 3

[6263]-341

B.E. (Robotics and Automation Engineering)

ADVANCED COMPUTATIONAL TECHNIQUES

(2019 Pattern) (Semester - VII) (Elective - III) (411503 A)

Time : 2½ Hours] ***[Max. Marks : 70***

Instructions to the candidates:

1) ***Answer Q1 or Q2, Q3 or Q4, Q5 or Q6, Q7 or Q8.***
2) ***Neat diagrams must be drawn wherever necessary.***
3) ***Assume suitable data if necessary.***
4) ***Use of Non-programmable scientific calculators is allowed.***
5) ***Figures to the right indicate full marks.***

Q1) a) Use the finite-difference approach to solve **[8]**

$$\frac{d^2T}{dx^2} + h'(T_a - T) = 0$$

b) Explore how MATLAB can be used to solve the following set of nonlinear ODEs from t 50 to 20: **[9]**

$$\frac{dx}{dt} = 1.2x - 0.6xy \qquad \frac{dy}{dt} = -0.8y + 0.3xy$$

where $x = 2$ and $y = 1$ at $t = 0$.

OR

Q2) a) Evaluate the eigenvalues and the eigen vectors of Equation **[8]**

$$\left(\frac{2k}{m_1} - \omega^2\right)A_1 - \frac{k}{m_1}A_2 = 0$$

$$-\frac{k}{m_2}A_1 + \left(\frac{2k}{m_2} - \omega^2\right)A_2 = 0$$

For the case where $m_1 = m_2 = 40$ kg and $k = 200$ N/m.

P.T.O.

b) An axially loaded wooden column has the following characteristics: **[9]**

$E = 10 \times 10^9$ Pa, $I = 1.25 \times 10^{-5}$ m^4, and $L = 3$ m. Determine the first eight eigen values and the corresponding buckling loads.

Q3) a) Solve $\frac{\partial u}{\partial u} = \frac{\partial^2 u}{\partial^2 x^2} in\, 0 < x < 5, t \geq 0$ given that $u(x,0) = 20$, $u(0,t) = 0$, $u(5,t) = 100$. Compute u for the time-step with h=1 by the Crank-Nicholson method. **[9]**

b) Find by Liebmann's Method the values at the interior lattice points of a square plate of the harmonic function u whose boundary values are given in the figure. **[9]**

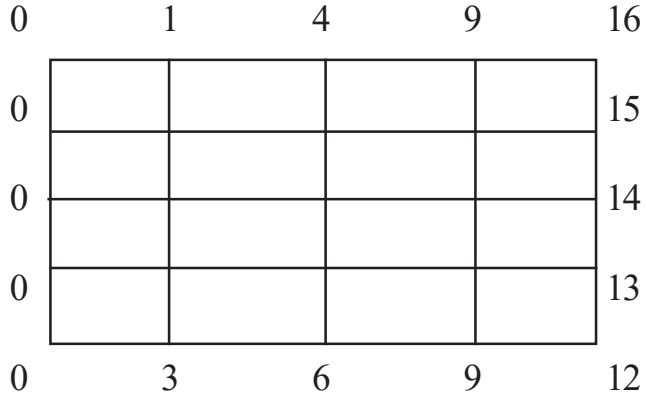

OR

Q4) a) Use the simple implicit finite-difference approximation to solve for the temperature distribution of a long, thin rod with a length of 10 cm and the following values: k' = 0.49 cal/(s . cm . °C), Δx = 2 cm, and Δt = 0.1 s. At t = 0, the temperature of the rod is zero and the boundary conditions are fixed for all times at $T(0)$ = 100°C and T(10) = 50°C. Note that the rod is aluminum with C = 0.2174 cal/(g. °C) and ρ = 2.7 g/cm^3. Therefore, k = 0.49/ (2.7 . 0.2174) = 0.835 cm^2/s and λ = 0.835(0.1)/(2)^2 = 0.020875. **[9]**

b) MacCormack method. Discuss with suitable example. **[9]**

Q5) a) What is Discontinuous Galerkin (DG) Meshfree Methods? How the methods are applied to solve the problems? **[8]**

b) Explain the different terms involved in Smoothed-particle hydrodynamics. Explain with suitable example. **[9]**

OR

Q6) a) Describe the various terminologies used in the semi-implicit Moving Particle technique. Give a relevant example to illustrate. **[8]**

b) Discuss about the hp-FEM approach. Provide an example to illustrate.**[9]**

Q7) a) Briefly describe the process of simulated annealing. How can it be applied to solve problems? **[9]**

b) Describe genetic algorithms. Give a detailed explanation of each genetic algorithm. **[9]**

OR

Q8) a) Explain sequential quadratic programming in detail. Provide an example to illustrate. **[9]**

b) Application to solve inverse kinematics problems. Discuss. **[9]**

.



Total No. of Questions : 8] **SEAT No. :**

PB-2468

[Total No. of Pages : 2

[6263]-342
B.E. (Robotics & Automation Engineering)
Wireless Sensor Network
(2019 Pattern) (Semester - VII) (411503 (B)) (Elective-III)

Time : 2½ Hours] ***[Max. Marks : 70***

Instructions to the candidates:

1) ***All questions are compulsory i.e. Solve Q.1 or Q,2, Q.3 or Q.4, Q.5 or Q.6, Q7 or Q8.***
2) ***Assume suitable data, if necessary.***
3) ***Figures to the right side indicates full marks.***
4) ***Neat diagrams must be drawn wherever necessary.***

Q1) a) Can the MAC protocols of 802.11 & Bluetooth be used for WSN? Justify and Explain these protocol. **[9]**

b) Explain WSN Standards- IEEE 802. 15.4 in detail **[8]**

OR

Q2) a) Briefly specify IEEE 802.15.4 MAC protocol. **[9]**

b) Explain the terms : **[8]**

i) Wibree, ii) BLE, iii) Zwave, iv) ANT

Q3) a) Explain Localization Challenges and its Properties. **[9]**

b) Explain in detail : **[8]**

i) Deployment Schemes

ii) Proximity Schemes

OR

P.T.O.

Q4) a) what is mean by Routing? Explain static routing in detail **[9]**

b) Explain in detail **[8]**

i) Ranging Schemes

ii) Location-Based Routing

Q5) a) Explain different Security Issues in Wireless Sensor Networks. **[9]**

b) Explain Different Clustering Techniques in detail. **[9]**

OR

Q6) a) Explain Security Mechanisms In Wsn. **[9]**

b) Explain different attacks on WSN. **[9]**

Q7) a) Write short note on General Testing and Validation process ofWSN. **[9]**

b) Write notes on

Home automation. **[9]**

OR

Q8) a) Explain WSN Applications in detail. **[9]**

b) Explain Top-Down Design Process Approach in detail for WSN. **[9]**

Total No. of Questions : 8] **SEAT No. :**

PB-2469

[Total No. of Pages : 2

[6263]-343

B.E. (Robotics & Automation Engineering)

Microprocessor and Microcontroller

(Elective - III) (2019 Pattern) (Semester - VII) (411503 (C))

Time : 2½ Hours] ***[Max. Marks : 70***

Instructions to the candidates:

1) ***All questions are compulsory i.e. Solve Q.1 or Q,2, Q.3 or Q.4, Q.5 or Q.6, Q7 or Q8.***
2) ***Assume suitable data, if necessary.***
3) ***Figures to the right side indicate full marks.***
4) ***Neat diagrams must be drawn wherever necessary.***

Q1) a) Discuss the significance of following signals of 8085 in detail: HOLD, READY, ALE, HLDA **[8]**

b) Analyze the PSW of 8051 and also explain the relevant flag bits. **[9]**

OR

Q2) a) Analyze the architecture of 8051 microcontroller along-with a suitable block diagram. **[8]**

b) Illustrate the addressing modes of 8051 microcontroller. Support your answer with suitable examples. **[9]**

Q3) a) Analyze the architecture of PIC18FXX microcontroller along with a suitable block diagram. **[9]**

b) Comparison of the PlC family. **[8]**

OR

P.T.O.

Q4) a) Explain : **[8]**

a) Watch Dog Timers

b) Power down modes

b) Illustrate the Instruction set of PIC18FXX microcontroller. Support your answer with suitable examples. **[9]**

Q5) a) Draw the interfacing diagram of Seven segment LED with Cortex M4 based microcontroller. Also write basic algorithm used for this interfacing. **[9]**

b) Explain STM32F4xx: Timers and counters **[9]**

OR

Q6) a) Draw the interfacing diagram of LDR and MQ3 with STM32F4xx based microcontroller and explain it. **[9]**

b) Write down concept of GPIO programming. **[9]**

Q7) a) Write down short note on Unmanned Vehicle Design Using Microcontroller, **[9]**

b) Explain in details Mobile Robot Analysis and control for Pipe Line Inspection. **[9]**

OR

Q8) a) What is interrupt driven data transfer? Is it a form of programmed data transfer or not!? While writing an interrupt service subroutine, what special features are usually incorporated extra in comparison to a normal subroutine? Justify. What is the difference in execution of RET and IRET instructions? **[9]**

b) Give the Bus Cycle timing diagrams for IN and OUT instructions. How are they different from comparable MOV instructions? Can MOV instruction be ever used for I/O operation? if yes, what the I/O type is then called? If no, why not? **[9]**

Total No. of Questions : 8] **SEAT No. :**

PB-2470

[Total No. of Pages : 2

[6263]-344
B.E. (Robotics & Automation Engineering)
Ergonomics and Work Management
(2019 Pattern) (Semester - VII) (411503 D) (Elective - III)

Time : 2½ Hours] ***[Max. Marks : 70***

Instructions to the candidates:

1) ***Answer Q1 or Q2, Q3 or Q4, Q5 or Q6, Q7 or Q8***
2) ***Neat diagrams must be drawn wherever necessary.***
3) ***Assume suitable data if necessary***
4) ***Use of Non-programmable scientific calculators is allowed.***
5) ***Figures to the right indicate full mark***

Q1) a) What is anthropometry? Give the principles for design of product using anthropometry. **[9]**

b) What is design of work surface? Explain with example. **[8]**

OR

Q2) a) List and discuss the displays for static and dynamic information. **[9]**

b) Discuss the effect of following on human performance in work: **[8]**

i) Noise/vibration ii) Heat.

Q3) a) Explain techniques to translate design research into useful product. **[9]**

b) What is Model-based systems engineering? Explain in detail. **[9]**

OR

Q4) a) Discuss the stages of design research. **[9]**

b) Explain the general trends in design for people. **[9]**

P.T.O.

Q5) a) What is Productivity? Explain factors affecting productivity. **[9]**

b) Discuss 5S with detail explanation. **[8]**

OR

Q6) a) Which techniques are used to reduce the work content. **[9]**

b) Define Method study. Explain procedure of method study. **[8]**

Q7) a) What is safety committee? What does it do? How is it constituted? **[9]**

b) Discuss prevention causes of accidents. **[9]**

OR

Q8) a) Explain the role of management and government in industrial safety. **[9]**

b) Which are different costs associated with the accident? Explain. **[9]**

Total No. of Questions : 8]

SEAT No. :

PB2471

[Total No. of Pages : 2

[6263]-345

B.E. (Robotics and Automation)

COMPUTATIONAL FLUID DYNAMICS

(2019 Pattern) (Semester - VII) (411504 (A)) (Elective - IV)

Time : 2½ Hours] *[Max. Marks : 70*

Instructions to the candidates:

1) ***Solve Q.1 or Q.2, Q.3 or Q.4, Q.5 or Q.6, Q.7 or Q.8.***
2) ***Neat diagrams must be drawn wherever necessary.***
3) ***Figures to the right side indicate full marks.***
4) ***Assume suitable data if necessary.***
5) ***Use of logarithmic tables, slide rules, Mollier charts, electronic pocket calculator and steam table is allowed.***

Q1) a) How do you validate the results obtained from the FVM for a 1-D diffusion problem? **[8]**

b) How does the choice of advection scheme affect the treatment of boundary conditions in FVM? **[9]**

OR

Q2) a) How does the Finite Volume method differ from Finite Difference and Finite Element methods? **[8]**

b) Discuss general steps involved in implementing the Finite Volume Method for a 2-D steady-state diffusion problem. **[9]**

Q3) a) What are the key terms in the momentum equation, and what do they represent physically? **[9]**

b) Explain the SIMPLER algorithm, and how does it differ from SIMPLE algorithm? **[9]**

OR

Q4) a) Explain the arrangement of variables on a staggered grid. **[9]**

b) What is the primitive variable approach in fluid dynamics, and how does it differ from other formulations? **[9]**

Q5) a) Discuss factors influence the quality of a grid in numerical simulations. **[9]**

b) Describe the process of automatic generation of unstructured grids. **[9]**

OR

P.T.O.

Q6) a) Explain the concept of a surface grid. **[9]**

b) Name and describe common types of grid elements used in simulations. **[9]**

Q7) a) How is CFD utilized in the simulation of batteries? **[8]**

b) What are the specific challenges addressed by CFD in simulating fluid flow throught pipes and valves? **[9]**

OR

Q8) a) How have machine learning and artificial intelligence impacted CFD simulations in recent years? **[8]**

b) Explai how CFD contribute to simulating and optimizing the cooling of electronic components. **[9]**

Total No. of Questions : 8]

SEAT No. :

PB2472

[Total No. of Pages : 2

[6263]-346

B.E. (Robotics & Automation)

INTERNET OF THINGS AND MACHINE LEARNING

(2019 Pattern) (Semester - VII) (Elective - IV) (411504 B)

Time : 2½ Hours] *[Max. Marks : 70*

Instructions to the candidates:

1) ***Solve Q.1 or Q.2, Q.3 or Q.4, Q.5 or Q.6, Q.7 or Q.8.***
2) ***Neat diagrams must be drawn wherever necessary.***
3) ***Figures to the right side indicate full marks.***
4) ***Assume suitable data if necessary.***

Q1) a) What are the types of cloud storage? **[6]**

b) What are the difficulties of medium access in wireless networks? **[6]**

c) How to use Python to analyze data? **[5]**

OR

Q2) a) What cloud storage requirements should you consider? **[6]**

b) What is medium access in wireless communication? **[6]**

c) What is data cleaning? **[5]**

Q3) a) What is Automated Machine Learning? **[6]**

b) Why is the Machine Learning Life Cycle Important? **[6]**

c) What is data collection and preprocessing? **[5]**

OR

Q4) a) What is Machine Learning? **[6]**

b) What is difference between Artificial intelligence and Machine Learning? **[6]**

c) Explain any one clustering algorithm. **[5]**

Q5) a) Give the Specifications of ESP8266 Wi-Fi Module. **[6]**

b) Explain Dynamic vs. static web servers. **[6]**

c) How to send sensor data to web server? **[6]**

OR

P.T.O.

Q6) a) Which are the steps to install and configure Apache Http Webserver and PHP module in windows server machine. **[6]**

b) Draw the circuit diagram how to use ESP8266 Wi-Fi Module. **[6]**

c) How do web servers work? **[6]**

Q7) a) State and explain IoT Applications in making smart home. **[6]**

b) What is smart metering? How does IoT work for smart metering? **[6]**

c) Which are the benefits of IoT in automotive industry? **[6]**

OR

Q8) a) Describe patient movement monitoring system architecture in IoT. **[6]**

b) What is a connected car device? How does it work? **[6]**

c) Briefly explain smart agriculture and irrigation system using IoT? **[6]**

Total No. of Questions : 8]

SEAT No. :

PB4403

[Total No. of Pages : 2

[6263]-347

B.E. (Robotics and Automation)

ARTIFICIAL NEURAL NETWORKS AND FUZZY SYSTEMS

(2019 Pattern) (Semester - VII) (411504 C) (Elective - IV)

Time : 2½ Hours] *[Max. Marks : 70*

Instructions to the candidates:

1) ***Answer Q.1 or Q.2, Q.3 or Q.4, Q.5 or Q.6, Q.7 or Q.8.***
2) ***Neat diagrams must be drawn wherever necessary.***
3) ***Figures to the right indicate full marks.***
4) ***Assume suitable data, if necessary.***

Q1) a) Elaborate various factors affecting on back propagation training in ANN. **[9]**

b) Differentiate single layer and multi-layer feed forward network. **[8]**

OR

Q2) a) Discuss auto associative and hetro associative memory. **[9]**

b) Why study of perception and convergence rule is important. Explain it. **[8]**

Q3) a) Define fuzzy logic and explain its significance in dealing with uncertainty. **[9]**

b) Brief on fuzzy set theory and its operations in detail. **[8]**

OR

Q4) a) Classify various properties of fuzzy sets. **[9]**

b) Explain fuzzy to crisp conversion. **[8]**

Q5) a) Discuss fuzzy controllers in detail. **[9]**

b) Why membership functions are important. Explain types of membership function. **[9]**

OR

P.T.O.

Q6) a) Differentiate between Fuzzyfication and Defuzzyfication. **[9]**

b) Brief on stages of generating fuzzy algorithm. **[9]**

Q7) a) Elaborate in detail industrial applications of Fuzzy Logic. **[9]**

b) Explain Mumdani and Sugeno Architecture. **[9]**

OR

Q8) a) What is fuzzy interface system? Explain in detail. **[9]**

b) Why concept of Operations of Fuzzy Relation is essential. Elaborate it. **[9]**

◀▶ ◀▶ ◀▶

Total No. of Questions : 8]

SEAT No. :

PB2473

[Total No. of Pages : 2

[6263]-348

B.E. (Robotics and Automation Engineering)

POWER ELECTRONICS AND DRIVES

(2019 Pattern) (Semester - VII) (411504 D) (Elective - IV)

Time : 2½ Hours] *[Max. Marks : 70*

Instructions to the candidates:

1) ***All questions are compulsory i.e. Solve Q.1 or Q.2, Q.3 or Q.4, Q.5 or Q.6, Q.7 or Q.8.***
2) ***Assume suitable data if necessary.***
3) ***Figures to the right indicates full marks.***
4) ***Neat diagrams must be drawn wherever necessary.***
5) ***Use of calculator is allowed.***

Q1) a) With the help of circuit diagram, explain the working of Step down chopper. **[9]**

b) A Step Down dc chopper has a resistive load of R = 15ohm and input voltage Edc = 200V. When the chopper remains ON, its voltage drop is 2.5V. The chopper frequency is 1kHz. If the duty cycle is 50%, determine: **[9]**

i) Average Output voltage

ii) RMS Output Voltage

iii) Chopper Frequency

OR

Q2) a) Describe a Morgan chopper with a associated voltage and current waveforms. Enumerate the demerits of Morgan chopper compared to Jones chopper. **[9]**

b) With the help of a neat circuit diagram and associated waveforms, discuss the operation of Buck-Boost converter. List the advantages and disadvantages of this type of converter. **[9]**

Q3) a) With an appropriate power diagram, discuss the principle of working of a three-phase bridge inverter. Draw phase and Line voltage waveforms on the assumption that each thyristor conducts for 120º and the resistive load is star connected. Also, Prepare a table which shows the sequence of firing of various SCRs. **[9]**

P.T.O.

b) A single phase half bridge is 96V. Compute: **[8]**

i) RMS Value of output Voltage
ii) Fundamental component of the output voltage waveform
iii) First Five harmonics of the output-voltage waveform
iv) Fundamental power consumed by the load
v) RMS power consumed by the load
vi) Verify that the Rms value determined by harmonic summation method is nearly equal to the value determined a by integration method.

OR

Q4) a) Draw & Explain the operation of single Phase current source Inverter Also draw the related voltage and current waveforms. **[9]**

b) With the help of neat circuit diagram and waveforms, explain the operation of thyristorised three-phase bridge inverter with resistive load in 180° Conduction mode. **[8]**

Q5) a) Discuss the working of delta connected three phase A.C regulator with suitable power diagram. Also, draw the various waveforms for $\alpha = 120^o$ **[9]**

b) Describe the operation of single phase to single phase step Down cycloconverter with neat power-diagram and voltage and current waveforms. **[9]**

OR

Q6) a) Describe the operation of single-phase half-wave A.C. voltage regulator with the help of voltage and current waveforms. Also derive the expression for average value of output voltage. **[9]**

b) Describe the operation of a three phase A.C. thyristor controller with neat power-diagram and voltage and current waveforms. **[9]**

Q7) a) Explain in detail classification of Electrical drives. **[8]**

b) Draw & Explain the operation of single-phase, half-wave converter drive. Also, draw the voltage and current waveforms. **[9]**

OR

Q8) a) Draw and explain the operation of four-quadrant A.C voltage controller. **[9]**

b) State and explain the various schemes for Induction motor speed control by voltage source inverter. **[8]**

Total No. of Questions : 8]

SEAT No. :

PB2474

[Total No. of Pages : 2

[6263]-349
B.E. (Robotics and Automation)
FIELD AND SERVICE ROBOTS
(2019 Pattern) (Semester - VIII) (411508)

Time : 2½ Hours] *[Max. Marks : 70*

Instructions to the candidates:

1) ***Answer Q. 1 or Q. 2, Q. 3 or Q. 4, Q. 5 or Q.6, Q. 7 or Q. 8.***
2) ***Neat diagrams must be drawn wherever necessary.***
3) ***Figures to the right indicate full marks.***
4) ***Use of calculator is allowed.***
5) ***Assume suitable data if necessary.***

Q1) a) How does incorporating intuitive interfaces into Personal Service Robots contribute to improving the overall user experience? **[9]**

b) How does effective planning within uncertainity play a crucial role in boosting the reliability of robotics in healthcare? **[9]**

OR

Q2) a) Provide an in - depth explanation of the design and functionality of a lightweight autonomous climbing robot tailored to assist elderly and disabled individuals? **[9]**

b) Elaborate on the advanced features and functionalities of the robotic library system specifically engineered for remote shelving facilities? **[9]**

Q3) a) What are the core principles behind the development of a pneumatically controlled expandable arm for searching in environments with limited access? Additionally, what are some defining features of the Distal Expandable Tube? **[9]**

b) What role do spraying robots play in promoting sustainability within grape production? Explore both the environmental and economic advantages they offer in contrast to conventional spraying methods. **[9]**

OR

Q4) a) In what ways does the utilization of robot and sensor teams for distributed search and rescue operations enhance response efficiency during emergency situations? Provide a concise overview. **[9]**

b) Provide a detailed explanation of the process involved in developing mobile robots specifically designed for search and rescue operations?**[9]**

P.T.O.

Q5) a) Discuss the difficulties inherent in landing an autonomous helicopter on a moving target and elaborate on the strategies implemented to mitigate these challenges, along with an assessment of their efficiency? **[9]**

b) Provide a concise overview of the procedure involved in acquiring helicopter control knowledge from a pilot for autonomous flight? Additionally, discuss the main experimental methods employed in this field and their resulting outcomes? **[8]**

OR

Q6) a) What is the significance of real-time navigation, guidance, and control for UAVs, and how are these capabilities achieved using affordable sensors? Additionally, outline the techniques employed to enable real-time functionality and their impact on UAV performance? **[9]**

b) What is the importance of compact millimeter-wave radar sensors for unmanned UAVs? Provide a concise overview of their characteristics and uses, highlighting how they influence UAV operations? **[8]**

Q7) a) Elaborate on the significance of designing a multi-functional eight-legged robot for the evaluation of neural interfaces? Additionally, provide a concise overview of the robot's structure and capabilities, and assess its potential applications in the field of neural interface technology evaluation? **[9]**

b) Elaborate on the importance of seamless human-robot interaction when utilizing an interactively operated service robot for skilled tasks? Furthermore, discuss the difficulties faced and potential strategies for enhancing cooperation between humans and robots within environments requiring specialized expertise? **[8]**

OR

Q8) a) Provide a brief discussion on how combining road scene monitoring with vehicle control contributes to enhanced road safety? Additionally, highlight the main technologies and methodologies used to achieve this integration? **[9]**

b) Provide a brief explanation of the concept of real-time interactive presence-building and its significance in human-robot interaction? Furthermore, outline the methodologies utilized for constructing building of presence online and examine their implications for the development of immersive virtual environments? **[8]**

❋ ❋ ❋

Total No. of Questions : 8]

SEAT No. :

PB2475

[Total No. of Pages : 2

[6263]-350

B.E.(Robotics & Automation Engineering)

PLC AND SCADA PROGRAMMING

(2019 Pattern)(Semester -VIII)(411509)

Time : 2½ Hours] *[Max. Marks :70*

Instructions to the candidates:

1) ***Answer Q1or Q2, Q3 or Q4, Q5 or Q6, Q7 or Q8.***
2) ***Assume suitable data, if necrssary.***
3) ***Figures to the right indicate full marks.***
4) ***Neat diagrams must be drawn Wherever necessary.***

Q1) a) Explain Modes of Operation and concepts of NO - NC switch Coil, Timer, Counter, Latching and Interlocking with diagram. **[9]**

b) Write Short Notes on, **[8]**

i) Ladder logic

ii) Functional block diagram

OR

Q2) a) Explain the rules for PLC Ladder Diagram Progamming, memory mapping and Input/output addressing. **[8]**

b) Write Short Note on, **[9]**

i) Sequential flow chart

ii) Instruction List

iii) Structured Text

Q3) a) What is DCS? How is it used in industry? Also State Advantages and Disadvantages of DCS. **[9]**

b) Explain the networking Protocols - Field bus, Process bus, Modbus and Ethernet, CANopen, HART. **[8]**

OR

Q4) a) What is the role of SCADA and DCS in industry 4.0. Explain with examples. **[8]**

b) Describe the Architecture of DCS? Write down the Features, Applications and Benefits of DCS. **[9]**

P.T.O.

Q5) a) Explain in detail the architecture of SCADA system with the different components of SCADA-MTU, RTU and HMI. **[9]**

b) What is the role of SCADA in Thermal Power Stations, Petroleum Industries,Sugar Factories. **[9]**

OR

Q6) a) What is the role of SCADA in Mass production industries,Traffic signals, Railways? **[9]**

b) What is wireless SCADA? Explain its basic components. **[9]**

Q7) a) Design the Ladder logic, for the example of tank liquid level control System. And explain each Rung. **[9]**

b) Explain what is interfacing of Inputs and Outputs with PLC. **[9]**

OR

Q8) a) Using Ladder Logic design Sequential switching of motors and Motor interlocking. **[9]**

b) Explain the Following; **[9]**

i) Mechanically operated Switch

ii) Encoder and Decoder

iii) Contactors

Total No. of Questions : 8]

SEAT No. :

PB4404

[Total No. of Pages :2

[6263]-351
B.E. (Robotics & Automation)
REVERSE ENGINEERING
(2019 Pattern) (Semester-VIII) (411510 A) (Elective-V)

Time : 2½ Hours] *[Max. Marks : 70*

Instructions to the candidates:

1) ***Solve Q.1 or Q.2, Q.3 or Q.4, Q.5 or Q.6, Q.7 or Q.8.***
2) ***Figures to the right indicates full marks.***
3) ***Neat diagram must be drawn wherever necessary.***
4) ***Assume suitable data if necessary.***
5) ***Use of Logarithmic Table, Slide rule is Electonic pocket calculator is allowed.***

Q1) a) Write a note on reverse engineering hardware and software. **[9]**

b) Define non-contact type reverse engineering methods and classify it with neat sketch. **[9]**

OR

Q2) a) With neat sketch explain reverse engineering phases. **[9]**

b) Classify reverse engineering software based on application. **[9]**

Q3) a) Explain the concept of detailed vendor assessment and benchmarking in selection process of reverse engineering. **[8]**

b) Explain Structured-light and Stereoscopic Imaging Systems. **[9]**

OR

Q4) a) Explain the concept "Time-of-flight" or Ranging Systems. **[8]**

b) With neat sketch explain the concept of X-ray tomography. **[9]**

Q5) a) Write a note on Adaptive Slicing Approach for Cloud Data Modeling. **[9]**

b) Explain data processing in rapid prototyping. **[9]**

OR

P.T.O.

Q6) a) Explain the Integration of Reverse Engineering and Rapid prototyping for Layer-based Model Generation. **[9]**

b) Explain Modeling of Cloud Data in Reverse Engineering. **[9]**

Q7) a) Explain with neat sketch application of reverse engineering in automotive industry. **[9]**

b) Explain the barriers in adopting reverse engineering. **[8]**

OR

Q8) a) Explain any one application of Reverse engineering in medical device industry. **[9]**

b) Explain the legal aspects of reverse engineering. **[8]**

Total No. of Questions : 8]

SEAT No. :

PB2476

[Total No. of Pages : 4

[6263]-352
B.E. (Robotics and Automation)
DATA ANALYTICS
(2019 Pattern) (Semester - VIII) (411510 B) (Elective - V)

Time : 2½ Hours] *[Max. Marks : 70*

Instructions to the candidates:

1) ***All questions are compulsory i.e. Solve Q.1 or Q.2, Q.3 or Q.4, Q.5 or Q.6, Q.7 or Q.8.***
2) ***Assume suitable data if necessary.***
3) ***Use of electronic pocket calculator is allowed.***
4) ***Neat diagrams must be drawn wherever necessary.***

Q1) a) A conjoint analysis was conducted to assess preferences for robotic systems based on the following key attributes: **[9]**

Attributes	Level 1	Level 2	Level 3
Robot Type	Educational Robot	Service Robot	Industrial Robot
Payload Capacity	10kg	20kg	30kg
End Effector type	Gripper	Vacuum Suction	Laser Cutter
Battery Life (hours)	4 hours	8 hours	12 hours
Cost (in Rs.)	Rs.40000	Rs.80000	Rs.120000

After analyzing the data and conducting a regression analysis, a regression equation was formulated to predict robot utility (U) based on these attributes:

U = 20 + (5 × Service Robot) + (10 × Industrial Robot) + (3 × 20 kg Payload)–

(2× 30 kg Payload) + (6 × Vacuum Suction End Effector) –

(4× Laser Cutter End Effector) + (2 × 8 hour Battery Life) – (1×12 hour Battery Life) – (0.2 × Rs.80000 Cost) – (0.5 × Rs.120000 Cost)

i) Calculate the part-worth utility score for each level of every attribute.

ii) Determine the importance of each attribute.

iii) Calculate the predicted utility (U) for a robotic system with the following attributes: Robot Type: Industrial Robot, Payload Capacity: 20 kg, End Effector Type: Vacuum Suction, Battery Life: 8 hours, Cost : Rs.80000

iv) How much more Valuable (in Rs.) Industrial robot compared to Educational Robot?

P.T.O.

b) In a robotics project. aim is to predict the energy consumption (in watt-hours) of a robot based on two independent variables: distance traveled (in meters) and payload weight (in kilograms). The dataset collected from various robot runs is as follows: **[9]**

Run	Distance (meters)	Payload (kg)	Energy Consumption (watt-hours)
1	5	2	300
2	8	3	420
3	3	2	250
4	10	4	500
5	6	2.5	350

i) Write down the general equation for the multi linear regression model to predict energy consumption (Y) based on distance traveled (Xl) and payload weight (X2).

ii) Compute the coefficients (intercept and slopes) of the regression model using the given data.

iii) Suppose a robot travels a distance of 7 meters with a payload weight of 3.5 kg. Use your regression model to predict its energy consumption.

OR

Q2) a) Given the following network, compute the outputs from o1 and o2 (assume that the activation function is the sigmoid function). Also calculate mean squared error (MSE). **[9]**

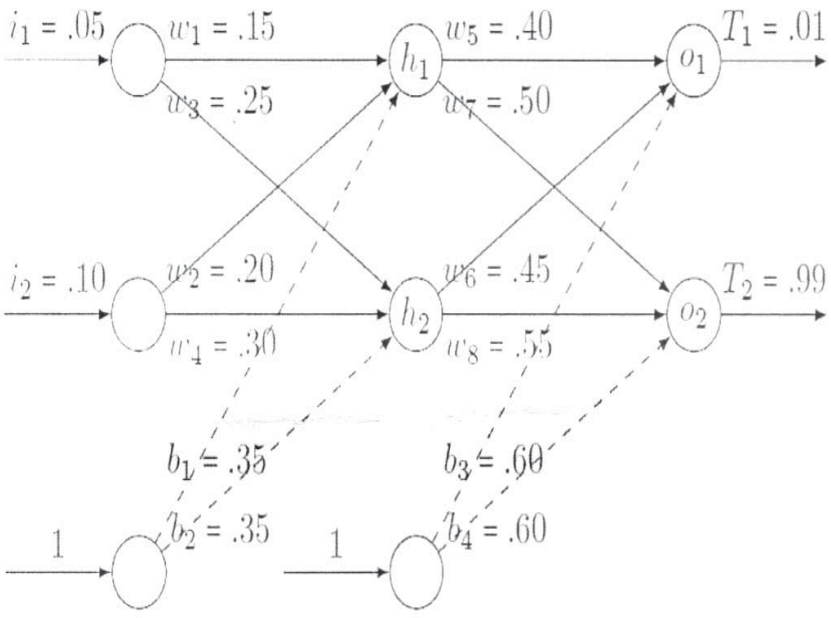

b) A dataset representing waypoints visited by a robot during a path planning task. **[9]**

The dataset contains 8 waypoints in a 2-dimensional space:
{(2,3), (3,3), (3,4), (5,3), (6,4), (6,5), (7,6), (8,5)}
Use k =3,
Choose initial cluster centroids: Cl = (3,3), C2 = (6,4), C3 = (7,6)
Apply the k-means algorithm to assign waypoints to clusters and update the centroids.

Q3) a) Explain Logistic Regression in detail with example. **[8]**

b) b) In a robotics setting, a robot with a camera-based vision system is trained to identify objects as either "vehicles" or "non-vehicles" based on what it sees. Here's the performance analysis on a test dataset of 10 objects: **[9]**

Observation	Expected	Predicted
1	Vehicle	Non-vehicle
2	Non-vehicle	Non-vehicle
3	Vehicle	Vehicle
4	Vehicle	Vehicle
5	Non-vehicle	Vehicle
6	Non-vehicle	Non-vehicle
7	Vehicle	Vehicle
8	Vehicle	Vehicle
9	Non-vehicle	Non-vehicle
10	Vehicle	Vehicle

i) Compute the confusion matrix for the data.

ii) Compute the accuracy, precision, recall, sensitivity and specificity of the data.

OR

Q4) a) Explain random forest in detail with example. **[8]**

b) Use a support vector machine to classify the following training set: **[9]**

X1	X2	Class
1	1	+
2	2	+
2	0	+
0	0	–
1	0	–
0	1	–

i) Determine the vector w and intercept b.

ii) Plot Decision boundary with training points on an xl-x2 axis.

iii) Find the class of point (0,2)

Q5) a) Explain the Expert system with an example? **[8]**

b) Use PCA to reduce the dimension from 2 to 1 from given data: **[9]**

Feature	Example 1	Example 2	Example3	Example 4
Xl	4	8	13	7
X2	11	4	5	14

OR

Q6) a) Explain genetic algorithm in detail? **[8]**

b) Consider the following set of training examples: **[9]**

Instance	Classification	al	a2
1	+	T	T
2	+	T	T
3	–	T	F
4	+	F	F
5	–	F	T
6	–	F	T

i) What is the entropy of this collection of training examples with respect to the target function "classification'?

ii) What is the information gain of a1 and a2 relative to these training examples?

Q7) a) Write a short note on **[10]**

i) Reinforcement learning

ii) SARSA Learning

b) What are the advantages and disadvantage of Reinforcement Learning. **[8]**

OR

Q8) a) Write a short note on **[10]**

i) Markov Chain analysis

ii) Regression based ML model

b) Explain Q learning and its application. **[8]**

Total No. of Questions : 8]

SEAT No. :

PB4405

[Total No. of Pages :4

[6263]-353
B.E. (Robotics & Automation)
Entrepreneurship And Innovations
(2019 Pattern) (Semester-VIII) (Elective-V) (411510 C)

Time : 2½ Hours] *[Max. Marks : 70*

Instructions to the candidates:

1) ***Solve Q.1 or Q.2, Q.3 or Q.4, Q.5 or Q.6, Q.7 or Q.8.***
2) ***Figures to the right indicates full marks.***
3) ***Neat diagram must be drawn wherever necessary.***
4) ***Assume suitable data if necessary.***
5) ***Use of Logarithmic Table, Slide rule is Electonic pocket calculator is allowed.***

Q1) a) Outline the stages involved in starting an industry and discuss the challenges associated with each stage. **[8]**

b) Why is innovation crucial for success in entrepreneurship, and could you cite examples of startups that have excelled through innovative approaches? **[9]**

OR

Q2) a) What role does entrepreneurship play in fostering job growth and driving economic progress within developing nations **[8]**

b) How do government policies aimed at supporting entrepreneurship influence the dynamics of the startup ecosystem, and what are their potential strengths and weaknesses? **[9]**

Q3) a) How do entrepreneurs incorporate financial forecasting into project formulation? Can you give and example from a successful Indian Venture? **[9]**

b) What is the importance of conducting through project evaluation before committing resources? **[9]**

OR

Q4) a) How do Business employ field-study methodologies and information collection techniques to discern potential projects while adhering to principles of accountacy? **[9]**

b) How do entrepreneurs leverage balance sheet preparation for project identification, highlighting its role in informed decision - making? **[9]**

P.T.O.

Q5) a) Define the concept of cost capital and outline its importance in financial decision -making. **[4]**

b) Total debt = ₹50,00,000 **[4]**

Interest expense = ₹3,00,000

Equity = ₹1,20,00,000

Beta coefficient = 1.2

Risk - free rate = 5%

Market return = 15%

Expected dividend per share next year = ₹5

Current market price per share = ₹100

Growth rate of dividends = 8%

Calculate:

i) The cost of debt (rD)

ii) The cost of equity (rE) using both the capital Asset Pricing

iii) Model (CAPM) and the Dividend Discount Model (DDM).

The Weighted Average Cost of Capital (WACC) assuming the weights of debt and equity are 40% and 60%, respectively.

c) How does cost-volume-profit analysis contribute to profit planning strategies? **[9]**

OR

Q6) a) Identify and describe three key financial functions integral to product planning and control. **[4]**

b) Total debt = ₹70,00,000 **[4]**

Interest expense = ₹3,50,000

Equity = ₹1,50,00,000

Beta coefficient = 1.3

Risk - free rate = 5.5%

Market return = 14%

Expected dividend per share next year = ₹6

Current market price per share = ₹120

Growth rate of dividends = 7%

Calculate:

i) The cost of debt (rD)

ii) The cost of equity (rE) using both the capital Asset PricingModel (CAPM) and the Dividend Discount Model (DDM).

iii) The Weighted Average Cost of Capital (WACC) assuming the weights of debt and equity are 45% and 55%, respectively.

c) What are the key policies guiding public entreprises in India, and why are they important for the country's economic development? **[9]**

Q7) a) What challenges do entrepreneurs face regarding Indian laws? Give examples. **[9]**

b) Provide examples of hazardous industries in India and explain how the Workmen's Compensation Act applies to ensure the safety and financial security of workers in these sectors. **[9]**

OR

Q8) a) Explain the importance of fair competition regulations for startups. **[9]**

b) What challenges do businesses face in complying with taxation laws in India, especially with frequent regulatoty changes? How can they mitigate risks related to tax audits and disputes? **[9]**

Total No. of Questions : 8]

SEAT No. :

PB-2477

[Total No. of Pages : 2

[6263]-355

B.E. (Robotics and Automation)

ADDITIVE MANUFACTURING

(2019 Pattern) (Semester - VIII) (411511A) (Elective-VI)

Time : 2½ Hours] *[Max. Marks : 70*

Instructions to the candidates:

1) ***All questions are compulsory i.e. Solve Q1 or Q2, Q3 or Q4, Q5 or Q6, Q7 or Q8.***
2) ***Assume Suitable data if necessary.***
3) ***Use of electronic pocket calculator is allowed.***
4) ***Neat diagrams must be drawn wherever necessary.***

Q1) a) Explain Fused Filament Fabrication (FFF) process with suitable sketch. List its Benefits, Limitations & Applications **[8]**

b) Explain Bio-printing process in detail. **[5]**

c) Explain Direct Ink Writing (DIW) process in detail. **[5]**

OR

Q2) a) Explain Plasma deposition process with suitable sketch. List its Benefits, Limitations & Applications. **[9]**

b) Explain Polyjet Printing What are the advantages and limitations of Polyjet Printing. **[9]**

Q3) a) Explain DFAM. What are the rules and recommendations for DFAM. **[9]**

b) Explain use of Shape-Memory Alloys in Additive Manufacturing with important process parameters, benefits, Limitations and appropriate applications. **[9]**

OR

Q4) a) Explain error sources in Additive Manufacturing. **[8]**

b) Write short note on 4D printing. **[5]**

c) Write short note on Biomimetic materials. **[5]**

P.T.O.

Q5) a) Explain the functions of Powder Handling System and Laser controller in additive manufacturing machine. **[8]**

b) Explain 3D printer design considerations for. **[9]**

i) Print bed

ii) Heater

iii) Nozzles

OR

Q6) a) Explain function of Cooling system and Gas Recirculation System in AM. **[8]**

b) What are the different types of In-fill pattern? Describe in details. **[9]**

Q7) a) Explain the applications of AM in Health care industry, Food-Processing and consumer application industry with suitable case study. **[8]**

b) Write a short note on Bio-materials and its applications. **[9]**

OR

Q8) a) Explain how additive manufacturing is used in Automotive Industries. Also write merits, demerits and practical feasible applications with illustrations. **[8]**

b) Write a short note on Bio-printing and its applications. **[9]**

⌘⌘⌘

Total No. of Questions : 8]

SEAT No. :

PB4407

[Total No. of Pages : 2

[6263]-356
B.E. (Robotics & Automation)
INDUSTRY 4.0
(2019 Pattern) (Semester -VIII) (411511B) (Elective-VI)

Time : 2½ Hours] ***[Max. Marks : 70***

Instructions to the candidates:

1) ***Solve Q.1 or Q.2, Q.3 or Q.4., Q.5 or Q.6, Q.7 or Q.8.***
2) ***Figure to the right indicates full marks.***
3) ***Neat diagram must be drawn wherever necessary.***
4) ***Assume Suitable data if necessary.***
5) ***Use of Logarithmic Table, Slide rule is Electronic pocket calculator is allowed.***

Q1) a) What do you mean by Process Automation and Optimization? **[8]**

b) Explain term: **[9]**

i) Cyber physical system

ii) Impact of Digital Twin

OR

Q2) a) What do you mean Digital twin? Explain with example. **[8]**

b) What is mean by Predictive maintenance and Anomaly Detection in Industry? How it will help for error detection? **[9]**

Q3) a) Explain Different Cloud deployment Techniques? **[9]**

b) Explain the following: **[9]**

i) Role of cloud Computing in IoT and Industry 4.0

ii) Virtualization

OR

Q4) a) Explain Architecture of cloud applicatons? **[9]**

b) Explain Fog Computing? With its various types. **[9]**

Q5) a) Explain Cyber Laws and cyber policies in Industry 4.0? **[9]**

b) Explain terms Data Communication and Networking with its characteristics. **[9]**

OR

P.T.O.

Q6) a) What is Security system and its function **[9]**

b) Write short note on Information Technology **[9]**

Q7) a) What is AI, explain in details **[8]**

b) Explain the term Industry 4.0 laboratories **[9]**

OR

Q8) a) Explain IoT and IIoT with its benefits and Disadvantages? **[9]**

b) Explain different Case studies on IoT and IIoT **[8]**



Total No. of Questions : 8]

SEAT No. :

PB-2478

[Total No. of Pages : 2

[6263]-357

B.E. (Robotics and Automation)

VLSI DESIGN FOR ROBOTICS

(2019 Pattern) (Semester - VIII) (411511C) (Elective-VI)

Time : 2½ Hours] *[Max. Marks : 70*

Instructions to the candidates:

1) ***All questions are compulsory i.e. Solve Q1 or Q2, Q3 or Q4, Q5 or Q6, Q7 or Q8.***
2) ***Figures to right side indicate full marks.***
3) ***Neat diagrams must be drawn wherever necessary.***
4) ***Assume Suitable data if necessary.***

Q1) a) Describe the Design Flow for PLD Architectures and give its applications. **[8]**

b) Write Short note on: **[9]**

i) Clock management techniques

ii) Simulation Tools

iii) Synthesis Tools

OR

Q2) a) What is FPGA synthesis and implementation? Describe in short along with proper diagram. **[9]**

b) Differentiate between CPLD and FPGA Architecture. **[8]**

Q3) a) Describe the terms CMOS Inverter and Device sizing with suitable circuit diagrams. **[9]**

b) Describe the Hot electron effect and Velocity saturation. Give proper example with diagram. **[8]**

OR

Q4) a) Differentiate between P-MOS and N-MOS systems. **[8]**

P.T.O.

b) Write short notes on; **[9]**

i) CMOS combinational logic design

ii) Power dissipations

iii) Power delay product

Q5) a) Design Issues like Antenna effect, Electro migration effect, and Timing analysis. **[9]**

b) What is AC and DC analysis? Write about Transfer Characteristics and its Transient responses. **[9]**

OR

Q6) a) Explain the Post-layout Simulation and Parasitic extraction along with Electrical Rule Check. **[9]**

b) Explain the Following; **[9]**

i) Fabrication methods of circuit elements

ii) Layout of cell

iii) Circuit Extraction

Q7) a) What is a Built In Self Test, JTAG & Boundary scan? Explain with neat diagram. **[9]**

b) Explain the Following for VLSI Testing; **[9]**

i) Types of fault

ii) Need of Design for Testability (DFT)

iii) DFT Guideline

OR

Q8) a) Describe the Test pattern generation, Sequential circuit test and Built In Self Test for VLSI circuit. **[9]**

b) Write in short about DFT Guideline, Testability, Fault models in VLSI. **[9]**

⌘⌘⌘

Total No. of Questions : 8]

SEAT No. :

PB-2479

[Total No. of Pages : 2

[6263]-358

B.E. (Robotics and Automation)

INTELLIGENT ROBOTICS SYSTEMS

(2019 Pattern) (Semester - VIII) (411511D) (Elective-VI)

Time : 2½ Hours] ***[Max. Marks : 70***

Instructions to the candidates:

1) ***Answer Q1 or Q2, Q3 or Q4, Q5or Q6, Q7 or Q8***
2) ***Neat diagrams must be drawn wherever necessary.***
3) ***Figures to the right side indicate full marks.***
4) ***Assume Suitable data if necessary.***

Q1) a) Discuss the differences between macro scale robots and micro robots, highlighting size constraints and design challenges. **[9]**

b) Define micro robotics and explain its significance in modern technology. **[8]**

OR

Q2) a) Discuss different actuation methods for micro robots, such as magnetic, piezoelectric, and electrostatic actuation. Compare their efficiency and applicability in different scenarios. **[9]**

b) Brief on Micro conveyors with its desired applications. **[8]**

Q3) a) Define neurorobotics and explain how it integrates principles from neuroscience and robotics. **[9]**

b) Explain the concept of neural control in robotics. How are neural networks or brain- inspired algorithms used to control robotic systems? **[8]**

OR

Q4) a) Elaborate optic flow in robots. **[9]**

b) Why speech recognition is important in nuero robots? Explain it. **[8]**

P.T.O.

Q5) a) Define cloud robotics and explain how it differs from traditional robotic systems. **[9]**

b) Discuss how cloud computing can enhance perception and sensing capabilities in robots. Provide examples of cloud-based solutions for image processing, object recognition, or environmental sensing. **[9]**

OR

Q6) a) Brief on Autonomous mobile robot on the web. **[9]**

b) Explain Web software architecture in detail. **[9]**

Q7) a) Discuss the key differences between traditional industrial robots and collaborative robots. What are the main advantages of collaborative robots in terms of safety and flexibility? **[9]**

b) Explain the concept of human-robot collaboration safety zones (HRCSZ) and their role in ensuring safe interactions between humans and robots. **[9]**

OR

Q8) a) Explore various industrial applications of collaborative robots, such as assembly tasks, material handling, quality inspection, and human-robot teamwork in manufacturing processes. **[9]**

b) Discuss collaborative work cells. **[9]**

⌘⌘⌘

Total No. of Questions : 8]

SEAT No. :

PB-2480

[Total No. of Pages : 2

[6263]-359

B.E. (Electronics & Computer Engineering)

DATA SCIENCE & VISUALIZATION

(2019 Pattern) (Semester - VII) (410341)

Time : 2½ Hours] *[Max. Marks : 70*

Instructions to the candidates:

1) ***Answer Q1 or Q2, Q3 or Q4, Q5 or Q6 and Q7 or Q8.***
2) ***Figures to the right side indicate full marks.***
3) ***Assume suitable data, if necessary.***

Q1) a) What is the purpose of a regression model? Explain the simple linear regression model in detail. **[6]**

b) What is data analysis? Why is data analysis important? Explain the different steps in data analysis process. **[6]**

c) What is clustering in data science? What are the types of clustering algorithms? Explain K Means clustering algorithm in details. **[8]**

OR

Q2) a) What is Multicollinearity in linear regression? Explain different of causes Multicollinearity in linear regression. **[6]**

b) What is Apriori Algorithm? Explain components of Apriori algorithm. Write the steps in Apriori Algorithm. **[6]**

c) What is classification in data analysis? What is the Naive Bayes algorithm? Explain how Naive Bayes algorithms work with examples. **[8]**

Q3) a) What is Decision Tree Analysis? Explain various steps of Decision Tree analysis. Explain with example and neat diagram how does the Decision Tree algorithm work. **[8]**

b) What is Random Forest algorithm? Explain with example working of Random Forest algorithm. Describe benefits and challenges of random forest algorithm. **[8]**

OR

P.T.O.

Q4) a) Explain the implementation of neural network for logical AND gate. **[8]**

b) What is Perceptron? Explain artificial and biological neural and compare them. Explain basic components of Perceptron with suitable diagram. **[8]**

Q5) a) Explain following plots in detail with the applications and examples : **[8]**

i) Area Chart ii) Bar Graph

iii) Scatter Plot iv) Pie Chart

b) What is Histogram plot? When to use Histogram plot? Explain different types of Histogram plots. **[8]**

OR

Q6) a) Construct box plot for following data : **[8]**

10, 11, 12, 22, 25, 27, 31, 33, 34, 34, 35, 36, 43, 50, 59

b) What is a Data dashboard? What are the benefits of using data dashboards? How to create an effective data dashboard? **[8]**

Q7) a) What is multidimensional data modelling. Explain advantages and disadvantages of multi-dimensional data modeling. List different tools for multidimensional data visualizations. **[9]**

b) What is Principal Component Analysis? Explain basic terminologies used in Principal Component Analysis. Explain various steps for Principal Component Analysis algorithm. **[9]**

OR

Q8) a) What is meant by clustering high-dimensional data? Explain the different challenges of clustering high-dimensional data. Explain different methods for clustering high-dimensional data. **[9]**

b) Explain following techniques of multivariate data visualization : **[9]**

i) Scatter Plot Matrix

ii) Parallel Coordinates

iii) Tree map

⌘⌘⌘

Total No. of Questions : 8]

SEAT No. :

PB2481

[6263]-360

[Total No. of Pages :2

B.E. (Electronics and Computer Engineering)

WEB TECHNOLOGY

(2019 Pattern) (Semester- VII) (410342)

Time : 2½ Hours] ***[Max. Marks : 70***

Instructions to the candidates:

1) ***Answer Q.1 or Q.2, Q.3 or Q.4, Q.5 or Q.6, Q.7 or Q.8.***
2) ***Figures to the right side indicate full marks.***
3) ***Assume Suitable data, if necessary.***

Q1) a) Explain features of Java script. How to create array and read elements in Java script. **[9]**

b) What are the various JavaScript objects? Explain any one with an example. **[8]**

OR

Q2) a) What are the different DOM Levels? Explain Document Object Model (DOM) with suitable example. **[9]**

b) What are Jquery Events, explain with example. **[8]**

Q3) a) Write a JSP program to demonstrate use of page directive, Scriplet Expression and Comment. **[8]**

b) Explain various JSP scripting elements, actions and Templates in JSP. **[9]**

OR

Q4) a) Write advantages of JSP over servlet and explain lifecycle of JSP. **[8]**

b) Explain the Strut architecture with neat diagram and also explain the benefits of Strut. **[9]**

P.T.O.

Q5) a) Explain how session and cookies are used for session management in PHP? **[9]**

b) What are the features of PHP? Explain the function with respects to PHP. **[9]**

OR

Q6) a) What is Associate arrays in PHP? Explain it with simple PHP code. **[9]**

b) What is purpose of AJAX? Explain with relevant example. **[9]**

Q7) a) Write short note on Bootstrap? Write a program to demonstrate button styles (warning, danger, Default, Primary, link, success). **[9]**

b) Draw and explain each tier of three tiers architecture using EJB. **[9]**

OR

Q8) a) List the difference between entity bean and session bean? Explain the callback method. **[9]**

b) What are the different types of EJB? Identify adn explain situations about when to use session beans. **[9]**



Total No. of Questions : 8]

SEAT No. :

PB-2482

[Total No. of Pages : 2

[6263]-361
B.E. (Electronics & Computer Engineering)
Internet of Things
(Semester - VII) (2019 Pattern) (410343)

Time : 2½ Hours] *[Max. Marks : 70*

Instructions to the candidates:

1) ***Answer Q.No. 1 or Q2, Q3 or Q4, Q5 or Q6, Q7 or Q8***
2) ***Figures to the right side indicate full marks***
3) ***Assume suitable data, if necessary***

Q1) a) Draw and explain in detail architecture of Wireless Sensor Network. **[6]**

b) Describe Public cloud in detail with diagram. State its advantages **[6]**

c) List out the various development environment for IoT cloud platform. Explain features and services provided by any three IoT cloud platform. **[8]**

OR

Q2) a) Draw and explain the basic architecture of cloud computing. **[6]**

b) What are challenges of cloud computing? Elaborate each challenge in brief. **[6]**

c) Explain characteristic features and challenges of Wireless Sensor Network **[8]**

Q3) a) What is Raspberry Pi? Draw the interfacing diagram of LED with Raspberry Pi. Also write the program for blinking LED with delay of 10 second. **[8]**

b) What is Arduino? What do you mean by open source hardware and software? Write the features of Arduino UNO board. **[8]**

OR

P.T.O.

Q4) a) Draw and explain interfacing of 16 x 2 LCD with Arduino UNO Board. Write the program to display "WELCOME" on first line and "SPPU, PUNE" on second line. **[8]**

b) Why Raspberry Pi is more successful than other? What is mean by programming development environment? Explain any three programming development environment for Raspberry Pi in brief. **[8]**

Q5) a) Explain structured, semi-structured and unstructured data. Also compare structured, semi-structured and unstructured data. **[8]**

b) What is Hadoop? Draw architecture of Hadoop. Why is Hadoop used for big data analysis? Explain different features of Hadoop. **[8]**

OR

Q6) a) What are the characteristics of big data? List out the components of big data solution. Also explain each one in detail. **[8]**

b) Explain Prescriptive, Diagnostic, Descriptive and Predictive data analytics in detail. **[8]**

Q7) a) Explain the following with help of neat diagram **[9]**

i) Air Pollution Monitoring using IoT.

ii) Smart Agriculture System using IoT.

b) Explain modern trends and challenges in IoT in detail. Also list the different modern trends in wearable technology **[9]**

OR

Q8) a) Explain the following with help of neat diagram **[9]**

i) IoT based Smart Car Parking.

ii) Smart Home Automation using IoT

b) What do you think citizens expect from their smart cities? What are the IoT use cases for smart cities. Give implementation details of any one use case. **[9]**

Total No. of Questions : 8] **SEAT No. :**

PB-2483

[Total No. of Pages : 2

[6263]-362
B.E. (Electronics & Computer Engineering)
Big Data & Analytics
(2019 Pattern) (Semester - VII) (410344 A) (Elective-III)

Time : 2½ Hours] ***[Max. Marks : 70***

Instructions to the candidates:

1) ***Answer Q1 or Q2 , Q3 or Q4, Q5 or Q6 and Q7 or Q8***
2) ***Figures to the right side indicate full marks.***
3) ***Assume suitable data, if necessary.***

Q1) a) Explain anatomy of File read and write in HDFS. **[8]**

b) Explain Map Reduce with proper diagram for word count example. **[9]**

OR

Q2) a) Explain Google file system. **[8]**

b) Explain Hadoop distributed file system. **[9]**

Q3) a) Explain different steps in Data Analytics Project Life cycle **[8]**

b) How data can be ingested in python. Write syntax in python same. **[9]**

OR

Q4) a) What is data preparation? Explain its types with suitable example. **[8]**

b) What is the need of big data analysis? Explain the different types of analysis techniques. **[9]**

P.T.O.

Q5) a) Explain challenges in Big data visualization. Write two data visualization functions from matplotlib. **[9]**

b) Explain data visualization with the help of example? What are the advantages of data visualization? **[9]**

OR

Q6) a) Explain different tools for data visualization. Write two data visualization functions from seaborn. **[9]**

b) How data visualization help Big data Analytics. Explain Data Visualization with Tableau. **[9]**

Q7) a) What is social media analytics? Explain it's need with sample case study **[9]**

b) How mobile analytics is different than social media analytics. Explain with suitable example. **[9]**

OR

Q8) a) What is text mining? Draw and explain text mining architecture and explain its need. **[9]**

b) Explain roles and responsibilities of big data analyst and data scientist.**[9]**

Total No. of Questions : 8]

SEAT No. :

PB-2484

[Total No. of Pages : 2

[6263]-363

B.E. (Electronics & Computer Engineering)

MOBILE APPLICATION DEVELOPMENT

(2019 Pattern) (Semester - VII) (Elective - III) (410344B)

Time : 2½ Hours] ***[Max. Marks : 70***

Instructions to the candidates:

1) ***Solve Q.1 or Q.2, Q.3 or Q.4, Q.5 or Q.6, Q.7or Q.8.***
2) ***Figures to the right indicate full marks.***

Q1) a) Enumerate and describe at least three different layout types in Android. **[8]**

b) Discuss the significance of Constraint Layout in Android UI design. Provide examples of its advantages over other layout types. **[9]**

OR

Q2) a) Define Animation in the context of Android development. Explain its importance in user engagement. **[8]**

b) Explain the significance of TextView, EditText, and Button in Android UI design. **[9]**

Q3) a) Discuss the significance of Unit Testing and Instrumentation Testing in Android. Provide scenarios where each type of testing is more suitable. **[9]**

b) Explain the significance of app signing in Android application publishing. Describe the process of generating and managing app signing keys. **[9]**

OR

Q4) a) Describe the concept of resource management in Android applications. Discuss the benefits of maintaining resources in a hierarchical structure. **[9]**

b) Explain the purpose and usage of string resources in Android development. Discuss their advantages over hardcoding strings in the app. **[9]**

P.T.O.

Q5) a) Discuss the significance of SQLite in Android development. Outline the steps involved in creating and managing a SQLite database within an Android application. **[8]**

b) Explain the role of Android Data and Storage APIs in application development. Describe at least three common data storage options available in Android. **[9]**

OR

Q6) a) Explain the security measures involved in sharing data via Content Providers between different apps in Android. **[8]**

b) Discuss the significance of Android Web APIs in application development. Provide examples of when to use APIs like WebView and HttpClient in Android apps. **[9]**

Q7) a) Explain the concept of Android permissions and their significance in ensuring app security. Discuss best practices for handling permissions in Android applications. **[9]**

b) Discuss the significance of zoom controls in a map-based Android application. Describe how to implement and customize zoom controls using the Maps API. **[9]**

OR

Q8) a) Discuss at least three security measures developers can implement to safeguard user data in an Android application. **[9]**

b) Outline the steps involved in retrieving a device's current location in an Android app. Discuss the considerations and permissions required for location access. **[9]**

Total No. of Questions : 8]

SEAT No. :

PB-2485

[Total No. of Pages : 2

[6263]-364

B.E. (Electronics and Computer Engineering)

INFORMATION AND CYBER SECURITY

(2019 Pattern) (Semester - VII) (410344C) (Elective - III)

Time : 2½ Hours] *[Max. Marks : 70*

Instructions to the candidates:

1) ***Answer Q.1 or Q.2, Q.3 or Q.4, Q5 or Q6,Q7or Q8***
2) ***Neat diagrams must be drawn wherever necessary.***
3) ***Figures to the right side indicate full marks.***
4) ***Assume Suitable data if necessary.***

Q1) a) Explain elliptic curve cryptography. **[8]**

b) Determine value of X using Chinese remainder theorem.

X = 1(mod 5) X = 6(mod 7) X = 8(mod 11) **[6]**

c) Solve if p = 7 , q = 17 using Diffie Hellman algorithm, select a = 6, b = 4. **[4]**

OR

Q2) a) What is digital signature? Which security goals are met by signing a document using digital signature? **[8]**

b) Explain Diffie Hellman key Exchange Algorithm with example. **[6]**

c) What characteristics are needed in a secure hash function? **[4]**

Q3) a) Classify and explain cybercrimes against property. **[7]**

b) Write note on Cyberstalking. **[6]**

c) Differentiate Qualitative and Quantitative Risk Analysis. **[4]**

OR

Q4) a) Explain Cloud computing and Cyber Crimes. **[7]**

b) Write a short note on Indian legal perspective. **[6]**

c) Explain challenges in social engineering. **[4]**

P.T.O.

Q5) a) Explain SSL handshake and SSL record protocol in detail with sketch. **[8]**

b) How AH and ESP protocols works under transport and tunnel mode. **[6]**

c) What four requirements were defined for Kerberos? **[4]**

OR

Q6) a) What services are provided by IPSec? What is the deference between tunnel mode and transport mode in IPSec. **[8]**

b) Explain Needham Schroeder algorithm with neat diagram. **[6]**

c) Write Short note on Mail Security. **[4]**

Q7) a) Explain phishing and password cracking. **[7]**

b) Explain Adware and Ransomware. **[6]**

c) Write short note on Intrusion Prevention. **[4]**

OR

Q8) a) What is SQL injection? Explain in detail. **[7]**

b) Write short note on DoS and DDoS attack. **[6]**

c) What are the different types of phishing? **[4]**

Total No. of Questions : 8]

SEAT No. :

PB-2486

[Total No. of Pages : 2

[6263]-365

B.E. (Electronics and Computer Engineering)

DIGITAL IMAGE PROCESSING

(2019 Pattern) (Semester - VII) (Elective - III) (410344D)

Time : 2½ Hours] *[Max. Marks : 70*

Instructions to the candidates:

1) ***Answer Q.1 or Q.2, Q.3 or Q.4, Q.5 or Q.6, Q.7 or Q.8.***
2) ***Neat diagrams must be drawn wherever necessary.***
3) ***Assume suitable data, if necessary.***
4) ***Figures to the right indicate full marks.***

Q1) a) What is Lossy compression? Explain DCT based compression. **[6]**

b) Explain Wavelet based compression in detail. **[5]**

c) What is data redundancy? Explain any two redundancies in detail. **[6]**

OR

Q2) a) Explain Arithmetic coding with suitable example. **[6]**

b) Explain Bitplane coding with suitable example. **[6]**

c) Explain image compression using JPEG with suitable block diagram. **[5]**

Q3) a) What is Hough transform? How it is used for edge linking? **[9]**

b) Explain the following Thresholding Techniques : **[9]**

i) Global

ii) Adaptive

iii) Otsu's Method.

OR

Q4) a) Explain Laplacian Edge defector? Why LOG mask preferred over Laplacian for edge detection? **[6]**

P.T.O.

b) Explain Morphological Operations : Closing, Hit-or-Miss transform, Boundary Detection. **[6]**

c) Explain Image Segmentation using - **[6]**

i) Image Region Splitting

ii) Region Merging

Q5) a) Explain in detail Optimum Notch Filtering for image restoration. **[6]**

b) Write short note on Polygonal approximation. **[6]**

c) Explain any three types of noise models. **[6]**

OR

Q6) a) Draw and explain Image Degradation Model? **[6]**

b) Explain following filter : **[6]**

i) Adaptive filter

ii) Inverse Filtering

c) Explain in detail Representation, Chain codes and Signatures. **[6]**

Q7) a) Explain Remote Sensing application of Image processing. **[6]**

b) Explain Bayes classifier image classification algorithm. **[6]**

c) Write a short note on image processing application as Biometric Authentication? **[5]**

OR

Q8) a) Explain Character Recognition application of Image processing. **[6]**

b) Explain Medical application of Image processing. **[6]**

c) What is Image classification? Explain Correlation based classifier. **[5]**

Total No. of Questions : 8] **SEAT No. :**

PB2487 **[Total No. of Pages : 3**

[6263]-366
B.E. (Electronics & Computer Engineering)
ROBOTICS & AUTOMATION
(2019 Pattern) (Semester - VII) (410345 A) (Elective - IV)

Time : 2½ Hours] ***[Max. Marks : 70***

Instructions to the candidates:

1) ***Answer the Q.1 or Q.2, Q.3 or Q.4, Q.5 or Q.6, Q.7 or Q.8.***
2) ***Neat diagrams must be drawn wherever necessary.***
3) ***Figures to the right side indicate full marks.***
4) ***Use of calculator is allowed.***
5) ***Assume suitable data if necessary.***

Q1) a) Explain the significance of Denavit-Hartenberg (D-H) parameters in the kinematic modeling of robotic manipulators. **[6]**

b) Explain the rules for establishing coordinate frames along the links of a robotic manipulator. **[6]**

c) Explain the steps involved in deriving the forward kinematics equations for a SCARA robot. Discuss the key' parameters and transformations used in the process. **[8]**

OR

Q2) a) Discuss how the four D-H parameters α, a, d and θ are defined and how they contribute to forming the transformation matrix between adjacent joint frames. **[8]**

b) Discuss the conventions and considerations involved in assigning coordinate frames to the joints and links. **[6]**

c) Describe the concept of forward kinematics for a simple two-joint robot system. **[6]**

P.T.O.

Q3) a) Explain the concept of Inverse Kinematics (IK) in the context of robotic systems. Define key terms: end-effector pose, joint angles, and degrees of freedom. **[8]**

b) Consider a simple three-axis robot with revolute joints along the X, Y, and Z axes. **[8]**

The robot has the following parameters:

- Joint 1 : θ1 with al = 2 units
- Joint 2 : θ2 with a2 = 3 units
- Joint 3 : θ3 with a3 = 1 unit

Using the direct approach in robotics, calculate the end-effector position Pee in the Cartesian space for the following joint angles:

- θ1 = 300
- θ2 = 450
- θ3 = 600

Express your answer in terms of x, y, and z coordinates.

OR

Q4) a) Define the terms "existence" and "uniqueness" in the context of solving inverse kinematics problems. Discuss factors that may affect the existence and uniqueness of solutions in different robotic systems. **[8]**

b) Explain the concept of the direct approach in Inverse Kinematics and how it is used to solve for joint angles. Define key terms such as end-effector pose, Jacobian matrix, and joint velocities. **[8]**

Q5) a) How is the concept of differential motion related to both linear and angular velocities? **[4]**

b) In what ways does the Jacobian help in mapping joint velocities to end effector velocities in the context of mixed joint types? **[6]**

c) Define the position profile for a system with a trapezoidal velocity profile. **[6]**

OR

Q6) a) Explain the relationship between the transformation matrix and angular velocity in the context of rigid body motion. **[4]**

b) Explain why its important to consider and address singularities in the design and control of robotic manipulators. **[6]**

c) Define Resolved Motion Position Control (RMPC) and explain its primary objective in the context of robotic manipulation. **[6]**

Q7) a) What are the different sensors used in servo control system? Explain any two sensors in details. **[9]**

b) Explain selection criterion of sensors, selection of drives and actuators, methods of control for Spay-painting robot. **[9]**

OR

Q8) a) Write short note on welding types of robotics in details **[9]**

i) Automated Welding

ii) Arc Welding

iii) Spot Welding

b) Explain selection criterion of sensors, selection of drives and actuators, methods of control for Potential applications in Nuclear power plant robot. **[9]**

◀▶ ◀▶ ◀▶

Total No. of Questions : 8]

SEAT No. :

PB2488

[Total No. of Pages : 2

[6263]-367

B.E. (Electronics and Computer Engineering)

HUMAN COMPUTER INTERFACE

(2019 Pattern) (Semester - VII) (Elective - IV) (410345 B)

Time : 2½ Hours] *[Max. Marks : 70*

Instructions to the candidates:

1) ***Answer Q.1 or Q.2, Q.3 or Q.4, Q.5 or Q.6, Q.7 or Q.8.***
2) ***Neat diagrams must be drawn wherever necessary.***
3) ***Figures to the right side indicate full marks.***
4) ***Assume suitable data if necessary.***

Q1) a) Explain WIMP interface elements. State advantages and disadvantages of WIMP interface. **[6]**

b) Explain the execution and evaluation cycle. **[6]**

c) Describe different interaction styles used to accommodate dialog between user and computer. **[6]**

OR

Q2) a) Explain theory of User experience by Honeycomb Model. **[6]**

b) Explain paradigms of Interaction design. **[6]**

c) Explain the context of interaction with an example? **[6]**

Q3) a) Explain the constraints of the software design process framework in HCI. **[9]**

b) What is Prototype? Explain Prototyping with hill climbing approach. **[8]**

OR

Q4) a) Explain UI layer and its execution framework. **[9]**

b) What are different types of scenarios? Write scenario for music player design. **[8]**

Q5) a) Discuss Shneiderman's 8 golden rules of interface design with an example. **[9]**

b) What are the goals of evaluation? Explain Evaluation through Expert Analysis. **[8]**

OR

P.T.O.

Q6) a) What is Usability? Explain the principles that support usability. **[9]**

b) Explain User Interface Management System (UIMS) conceptual architecture. **[8]**

Q7) a) Explain Keystroke-Level-Model (KLM). **[9]**

b) Describe a linguistic model in detail. **[9]**

OR

Q8) a) A Hierarchical Task Analysis (HTA) provides an understanding of the tasks users need to perform to achieve a certain goal. Perform HTA of the task to cook food(rice). Illustrate using diagram. **[9]**

b) Discuss applications meant for computer-mediated communication. **[9]**

Total No. of Questions : 8] **SEAT No. :**

PB2489 **[Total No. of Pages : 2**

[6263]-368

B.E. (Electronics and Computer Engineering)

DIGITAL SYSTEM DESIGN

(2019 Pattern) (Semester - VII) (Elective - IV) (410345 C)

Time : 2½ Hours] ***[Max. Marks : 70***

Instructions to the candidates:

1) ***Answer Q.1 or Q.2, Q.3 or Q.4, Q.5 or Q.6, Q.7 or Q.8.***
2) ***Figures to the right side indicate full marks.***
3) ***Assume suitable data if necessary.***
4) ***Neat diagrams must be drawn wherever necessary.***

Q1) a) Explain the synthesis in detail. Explain with suitable example about Synthesis of sequential logic with flip-flops. **[9]**

b) Explain the synthesis of Static loops without embedded timing controls and with embedded timing controls. **[8]**

OR

Q2) a) Explain in details basic rules used to anticipating the results of synthesis. **[9]**

b) Explain how to avoid design traps. Explain the concept of Divide and Conquer of VLSI circuits. **[8]**

Q3) a) Explain in detail about partitioning sequential machines into a datapath. **[9]**

b) Explain in detail about RISC SPM Instruction Set. **[8]**

OR

Q4) a) Explain in detail about UART Transmitter and Receiver. **[9]**

b) Sketch ASM and ASMD chart for a synchronous 4-bit binary counter with proper explanation. **[8]**

Q5) a) Sketch the circuit diagram and explain the operation of Programmable Array Logic (PAL). **[9]**

b) Explain in detail about programmable ROM. Compare the various types of ROMs. **[9]**

OR

P.T.O.

Q6) a) Sketch and explain the architecture of FPGA. Sketch the design flow for FPGA based designs with HDL entry. **[9]**

b) Sketch and explain Carry look-ahead adder circuit. **[9]**

Q7) a) Explain in detail about Post synthesis Timing Verification. **[10]**

b) Explain the different option available for elimination of ASIC timing violation. **[8]**

OR

Q8) a) Describe fault simulation. Explain different approaches of Fault simulations. **[10]**

b) Explain JTAG Registers and instructions in detail. **[8]**



Total No. of Questions : 8]

SEAT No. :

PB2490

[Total No. of Pages : 2

[6263]-369

B.E. (Electronics & Computer Engineering)

AUGMENTED AND VIRTUAL REALITY

(2019 Pattern) (Semester - VII) (Elective - IV) (410345 D)

Time : 2½ Hours] *[Max. Marks : 70*

Instructions to the candidates:

1) ***Answer Q.1 or Q.2, Q.3 or Q.4, Q.5 or Q.6, Q.7 or Q.8.***
2) ***Figures to the right side indicate full marks.***
3) ***Assume suitable data if necessary.***
4) ***Neat diagrams must be drawn wherever necessary.***

Q1) a) What is representation of virtual world explain in detail? **[5]**

b) What are the two types of rendering? Explain any one in details? **[6]**

c) Explain the commonly used haptic devices in details. **[6]**

OR

Q2) a) What are the problems with haptic technology? **[5]**

b) Explain the main objectives of virtual worlds? **[6]**

c) List and explain the features of the virtual world? **[6]**

Q3) a) How will virtual reality change the way we interact with the world? **[5]**

b) List and explain the device is used to experience virtual reality? **[6]**

c) Explain how to Interacting with the VR System. **[6]**

OR

Q4) a) What is the importance of virtual reality in our daily life? **[5]**

b) What are the different Substance of the Virtual World? **[6]**

c) Explain the following terms **[6]**

i) Interacting with Others-Shared Experience,

ii) Collaborative Interaction

Q5) a) Compare between virtual reality and AR? **[5]**

b) Explain, what are the different constraints affect a mobile AR experience? **[6]**

c) Explain why augmented reality is the best? **[7]**

OR

P.T.O.

Q6) a) Explain the concepts of marker-based and marker less tracking in AR. **[5]**

b) List and explain the main benefits of AR? **[6]**

c) How does AR works? Explain. **[7]**

Q7) a) Explain the different software component of Augmented system required for Reality Systems. **[5]**

b) Explain Software Tools for Content Creation. **[6]**

c) Explain in brief description of how virtual reality works? **[7]**

OR

Q8) a) Explain Mobile Augmented Reality. **[5]**

b) Explain how does augmented reality work on mobile? **[6]**

c) Explain how does virtual reality help to make work experiences more? **[7]**

Total No. of Questions : 8]

SEAT No. :

PB4409

[Total No. of Pages : 2

[6263]-370

B.E.(Electronics and Computer Engineering)

ARTIFICIAL INTELLIGENCE AND MACHINE LEARNING

(2019 Pattern) (Semester - VIII) (410350)

Time : 2½ Hours] *[Max. Marks : 70*

Instructions to the candidates:

1) ***Answer Q. 1 or Q. 2, Q. 3 or Q. 4, Q. 5 or Q. 6 and Q. 7 or Q. 8.***
2) ***Figures to the right indicate full marks.***
3) ***Assume suitable data, if necessary.***

Q1) a) Explain Forward Changing and Vbackward changing algorithm with the help of example. **[6]**

b) Describe different approaches to knowledge representation. **[6]**

c) Explain WUMPUS World Environment giving it space description explain how percept sequences generated. **[8]**

OR

Q2) a) Explain the Bayesian Networks. **[6]**

b) Explain modus ponen with suitable example. **[6]**

c) Distinguish between propositional logic and first order predicate logic knowledge representation mechanism. **[8]**

Q3) a) Explain Geometric Model and Probabilistic Model with suitable examples. **[8]**

b) Discuss the recent trends in various learning techniques of machine learning. **[8]**

OR

Q4) a) Explain learning techniques in ML and explain in detail. **[8]**

b) How PCA is used for dimensionality reduction in machine learning? **[8]**

P.T.O.

Q5) a) What is decision trees. Explain in detail? **[8]**

b) Differentiate between overfitting and underfitting. **[8]**

OR

Q6) a) Write a detail note on naive Bayes linear models? **[8]**

b) What is support vector machine. Discuss in detail? **[8]**

Q7) a) Explain the concept of Back Propagation in ANN with example. **[9]**

b) What is K mean clustering? Explain with example. **[9]**

OR

Q8) a) What are building blocks of neural network, elaborate? **[9]**

b) Write a short note on Recurrent neural n/w & convolutional neural n/w. **[9]**

* * *

Total No. of Questions : 8]

SEAT No. : [ ]

PB4410

[Total No. of Pages : 2

[6263]-371

B.E. (Electronics and Computer Engineering)

VLSI DESIGN AND TECHNOLOGY

(2019 Pattern) (Semester - VIII) (410351)

Time : 2½ Hours] ***[Max. Marks : 70***

Instructions to the candidates:

1) ***Answer the Q.1 or Q.2, Q.3 or Q.4, Q.5 or Q.6, Q.7 or Q.8.***
2) ***Neat diagrams must be drawn wherever necessary.***
3) ***Figures to the right indicate full marks.***
4) ***Use of logarithmic tables slide rule, Electronic pocket calculator is allowed.***
5) ***Assume Suitable data if necessary.***

Q1) a) Differentiate between static RAM and dynamic RAM. Enlist the different DRAM cells. **[8]**

b) Explain the refresh circuit. Also explain the timings. **[9]**

OR

Q2) a) Explain the 6T SRAM cell with the help of diagram. **[8]**

b) Explain in brief the sense amplifier. **[9]**

Q3) a) Explain the different factors considered in floor planning. **[8]**

b) Explain the power distribution and clock distribution. **[9]**

OR

Q4) a) Explain in brief the different floor planning methods. **[8]**

b) Explain the global routing and switchbox routing. **[9]**

P.T.O.

Q5) a) Explain in brief the carry chains in FPGA. **[9]**

b) Explain the example of logic blocks in commercial FPGAs. **[9]**

OR

Q6) a) Explain with suitable example how to use the Shannon's decomposition to implement function. **[9]**

b) Explain the JTAG. Also explain the boundary scan. **[9]**

Q7) a) Explain the MOSFET current-voltage characteristics. **[9]**

b) Design the 2-input CMOS NAND and NOR gate. **[9]**

OR

Q8) a) Explain the layout design rules. Also explain the scaling issues in the design of CMOS circuit. **[9]**

b) Design CMOS logic for Y = AB + CD. Calculate W/L ratio for NMOS and PMOS area needed on chip. Find the total area. **[9]**



Total No. of Questions : 8]

SEAT No. :

PB4411

[Total No. of Pages :2

[6263]-373

B.E. (Electronics & Computer Engg.)

EMBEDDED SYSTEM AND REAL TIME OPERATING SYSTEMS

(2019 Pattern) (Semester-VIII) (410352 B) (Elective - V)

Time : 2½ Hours] *[Max. Marks : 70*

Instructions to the candidates:

1) ***Answer Q.1 or Q.2, Q.3 or Q.4, Q.5 or Q.6, Q.7 or Q.8.***
2) ***Neat diagram must be drawn wherever necessary.***
3) ***Figures to the right indicates full marks.***
4) ***Assume suitable data if necessary.***

Q1) a) Explain the features of μ cos II. **[6]**

b) Explain any two services of μ cos II RTOS. **[6]**

c) Explain Task & Resource synchronisation in μ cos II. **[6]**

OR

Q2) a) Describe intertask communication process in μ cos II. **[6]**

b) Draw & explain structure of kernel. **[6]**

c) How semaphore & mutex works in μ cos II. **[6]**

Q3) a) Explain the Features of embedded Linux. **[6]**

b) Write short Notes: **[6]**

i) Host system Requirements

ii) Hosting target boards.

c) Describe the concept of embedded Development environment. **[5]**

OR

Q4) a) Explain the components of any standard embedded system. **[6]**

b) Write advantages of embedded system. **[5]**

c) Compare embedded Linux OS with general purpose OS. **[6]**

P.T.O.

Q5) a) What is role of boot loader? Explain. **[5]**

b) Explain universal boot loader. Give an example. **[6]**

c) What is Module utility & Linux file system in embedded Linux. **[6]**

OR

Q6) a) Describe the background behind Linux Kernel. **[6]**

b) Describe the U-Boot porting & Driver methods in embedded Linux OS. **[6]**

c) Explain configuration of embedded Linux Kernel. **[5]**

Q7) a) Explain the tools of embedded software development. **[6]**

b) Write features of ATMega 328p processor. **[6]**

c) Explain the structure of Arduino board. **[6]**

OR

Q8) a) Write the steps followed to develop GPIO of LED & PIR sensor program. **[6]**

b) Explain the features of Arduino open platform (IDE), **[6]**

c) Explain the function of I/O pins of ATMega 328p. **[6]**

Total No. of Questions : 8]

SEAT No. :

PB4412

[Total No. of Pages :2

[6263]-374

B.E. (Electronics & Computer Engg.)

SOFTWARE TESTING AND QUALITY ASSURANCE

(2019 Pattern) (Semester-VIII) (410352 C) (Elective - V)

Time : 2½ Hours] *[Max. Marks : 70*

Instructions to the candidates:

1) *Answer Q.1 or Q.2, Q.3 or Q.4, Q.5 or Q.6, Q.7 or Q.8.*
2) *Neat diagram must be drawn wherever necessary.*
3) *Figures to the right indicate full marks.*
4) *Assume suitable data if necessary.*

Q1) a) Explain Design and architecture for Automation. **[8]**

b) Waht is automated testing in software testing? How to decide what to automatic in testing and how define scope of automation. **[6]**

c) What are the differences in testing automation in agile and waterfall model? **[4]**

OR

Q2) a) What is data driven testing? Explain Data driven testing framework. **[8]**

b) What are some of the challenges in automating the testing of GUI portions of an application? Compare backend testing and frontend testing. **[6]**

c) What are the selection criteria of automated testing tool? **[4]**

Q3) a) What is Selenium? What are the different Selenium components? **[9]**

b) Explain Selenium Grid architecture with the help of a neat diagram. **[8]**

OR

Q4) a) Describe Selenium Web driver architecture with the help of a neat diagram. List the advantages of Web driver over selenium server. **[9]**

b) Why should one select selenium as a test tool? What are selenium test design considerations? **[8]**

P.T.O.

Q5) a) Define Software quality. How cost and risk factors affecting software quality. **[9]**

b) What is six sigma? Explain the terms DMAIC and DMADV. **[8]**

OR

Q6) a) Define software quality assurance, List various objectives of SQA and explain elements of SQA. **[9]**

b) What is ISO standard? What are advantages and limitations of ISO standard. **[8]**

Q7) a) Explain the following terms-Pareto Chart, Scatter diagram, cause and effect diagram. **[9]**

b) Explain total quality management (TQM). List out benefit of TQM. **[9]**

OR

Q8) a) List out in process quality Metrics. Explain any two quality metrics in detail. **[9]**

b) Explain with example software maintenance metric: **[9]**

i) Fix backlog and backlog maintenance index

ii) Percent Delinquent fixes

Total No. of Questions : 8]

SEAT No. :

PB4413

[Total No. of Pages :2

[6263]-375

B.E. (Electronics & Computer Engineering)

ARTIFICIAL NEURAL NETWORK

(2019 Pattern) (Semester-VIII) (410352 D) (Elective - V)

Time : 2½ Hours] *[Max. Marks : 70*

Instructions to the candidates:

1) *Answer Q.1 or Q.2, Q.3 or Q.4, Q.5 or Q.6, Q.7 or Q.8.*
2) *Figures to the right indicates full marks.*
3) *Assume suitable data if necessary.*

Q1) a) Explain the backpropagation algorithm in the context of training neural networks. How does backpropagation work, and what is its significance in optimizing the weights of a neural network during training? **[8]**

b) What is an artificial neural network? Why is artificial neural network important? Draw and explain architecture of artificial neural network. **[9]**

OR

Q2) a) What is activation function artificial neural network? Why it is required in artificial neural network? Explain any two activation function in detail.**[8]**

b) Explain the role of weights and biases in a deep learning model. Explain impact of Learning Rate in Deep Learning. Explain the purpose of specifying the number of epochs during training. **[9]**

Q3) a) Explain padding and stride related to CNN. Explain significance of padding and stride with suitable examples. **[8]**

b) What is softmax function? Describe the significance of the softmax activation function CNNs. How does the softmax function handle the task of multi-class classification? Compare softmax and Sigmoid activation function. **[9]**

OR

Q4) a) Draw and explain architecture of convolutionl Neural Networks. State its advantages and disadvantages. **[8]**

b) Explain the training process of Convolutional Neural Networks. How are CNNs trained using backpropagation and gradient descent? Discuss the importance of data augmentation and regularization techniques during the training process. **[9]**

P.T.O.

Q5) a) Discuss the limitations of traditional feedforward neural networks in handling sequential data. How does the Recurrent Neural Network (RNN) architecture overcome these limitations? Explain how the RNN's is suitable for processing sequential data. **[9]**

b) Explain the Gated Recurrent Unit architecture in Recurrent Neural Networks. How does the GRU architecture address the vanishing gradient problem and improve the training of RNNs? Discuss the main components of the GRU architecture and their functions. **[9]**

OR

Q6) a) Explain the architecture and working principle of Bidirectional Recurrent Neural Networks (BRNN). How do BRNNs process information bidirectionally, and what are their main applications? Discuss the advantages of BRNNs over unidirectional RNNs. **[9]**

b) Explain the process of forward propagation in a Recurrent Neural Network. How does forward propagation work in the context of processing sequential data? Discuss the flow of information through the network, including the input, hidden and output layers. **[9]**

Q7) a) What are popular deep learning algorithms for natural language processing? Explain any one in detail with architecture diagram. **[9]**

b) What is natural language processing? Explain different phases of Natural Language Processing. What are the advantages and disadvantages of using deep learning for natural language processing? **[9]**

OR

Q8) a) Explain the process of training a Deep Learning model for speech recognition. What are the key steps involved in training a model for speech recognition tasks using deep learning techniques? Discuss the challenges and solutions specific to speech recognition. **[9]**

b) Explain the application of Convolutional Neural Networks in handwritten digit recognition. How are CNNs utilized in digit recognition tasks? Discuss the architecture of CNNs adapted for digit recognition, including the training process, activation functions, and output layers. **[9]**

Total No. of Questions : 8]

SEAT No. :

PB2491

[Total No. of Pages : 2

[6263]-376

B.E. (Electronics and Computer Engineering)

DATA MINING AND WAREHOUSING

(2019 Pattern) (Semester - VIII) (Elective - VI) (410353A)

Time : 2½ Hours] *[Max. Marks : 70*

Instructions to the candidates:

1) ***Answer Q.1 or Q.2, Q.3 or Q.4, Q.5 or Q.6 and Q.7 or Q.8.***
2) ***Figures to the right indicate full marks.***
3) ***Assume suitable data, if necessary.***

Q1) a) How to measure dissimilarity in the following attributes. Write an appropriate example for each. **[8]**

i) Nominal attributes

ii) Binary attributes

b) Explain the following. **[9]**

i) Minskowski Distance

ii) Euclidean distance

iii) Manhattan distance

OR

Q2) a) Calculate the Euclidean distance, Manhattan distance and cosine similarity between two vectors (3,2,0,5) and (1,0,0,0). **[9]**

b) Explain with example dissimilarity for Attributes of Mixed Types. **[8]**

Q3) a) Describe Market Basket Analysis example for frequent itemset mining. **[9]**

b) Explain the working of FP-growth algorithm with suitable example. **[8]**

OR

Q4) a) Explain Apriori algorithm. How do you find frequent itemsets on Transactional Data. Explain with one example. **[9]**

b) Briefly with an example explain the following : **[8]**

i) Frequent itemset

ii) Closed frequent Itemset

P.T.O.

Q5) a) Define classification and prediction.Explain decision tree based classification method with suitable example. **[9]**

b) Write and explain K-Nearest-Neighbour Classification algorithm with suitable example. **[9]**

OR

Q6) a) Explain the following with example: **[9]**

i) Entropy

ii) Gini Index

iii) Information Gain

iv) Gain Ratio

b) What is Bayesian Belief Network. Elaborate the training process of a Bayesian Belief Network with suitable example. **[9]**

Q7) a) Explain following measures for evaluating classifier accuracy **[9]**

i) Specificity

ii) Sensitivity

iii) Recall

iv) Precision

b) Explain Systematic learning. Differentiate between Wholistic learning and Multi perspective learning. **[9]**

OR

Q8) a) Explain in detail following techniques to evaluate the accuracy of a Classifier. **[9]**

i) Random subsampling

ii) Cross validation

b) Define systematic Learning.Discuss Reinforcement learning relevance and its applications in real time environment. **[9]**



Total No. of Questions : 8]

SEAT No. :

PB-2492

[Total No. of Pages : 2

[6263]-377

B.E. (Electronics and Computer)

ELECTRIC VEHICLE TECHNOLOGY

(2019 Pattern) (Semester - VIII) (410353B) (Elective-VI)

Time : 2½ Hours] *[Max. Marks : 70*

Instructions to the candidates:

1) ***Answer Q1 or Q2, Q3 or Q4, Q5 or Q6, Q7 or Q8***
2) ***Neat diagrams must be drawn wherever necessary.***
3) ***Assume Suitable data, if necessary.***
4) ***Figures to the right side indicate full marks.***

Q1) a) Explain the basic concept of electric traction and its significance in the context of electric vehicles (EVs). How does electric traction contribute to improved performance and efficiency in EVs? **[9]**

b) Describe various electric drivetrain topologies commonly used in EVs. Compare and contrast at least three different topologies, highlighting their advantages and disadvantages. **[8]**

OR

Q2) a) Provide an introduction to the electric propulsion unit used in electric vehicles. Identify and explain the key electric components utilized in EVs and their respective roles in the propulsion system. **[9]**

b) Describe the types of sensors commonly used in electric vehicles and their respective functions. Discuss how sensors contribute to real-time monitoring, control, and safety in EVs. **[8]**

Q3) a) Evaluate fuel cell-based energy storage in electric vehicles. Explain the principle of operation of fuel cells in EVs and compare their performance, efficiency and environmental impact with battery-based systems. **[9]**

b) Discuss the factors used in the selection of energy storage devices for electric vehicles. Consider criteria such as cost, weight, size, energy density, power density, lifespan and environmental impact. **[9]**

OR

P.T.O.

Q4) a) Explain the use of supercapacitors and hydrogen fuel cells in EVs. Discuss the necessity, advantages and specifications of these alternative energy storage technologies in the context of electric vehicle applications. **[9]**

b) Describe the criteria for selecting batteries in electric vehicles. Discuss factors such as voltage requirements, energy density, power output, temperature sensitivity and safety considerations in choosing suitable batteries for EV applications. **[9]**

Q5) a) Discuss the basics of battery charging for electric vehicles. Explain the types of charging and their functions in replenishing EV batteries. **[9]**

b) Outline the points to be considered in the design of a charger for electric vehicles. Discuss factors such as charging voltage, current capacity, connector compatibility, safety features and communication protocols. **[8]**

OR

Q6) a) Describe the types of chargers used for electric vehicles and their working principles. Differentiate between Level 1, Level 2 and Level 3 chargers and explain how they vary in terms of charging speed and compatibility with EVs. **[9]**

b) Discuss the role of solar power, wind power, and other renewable sources in generating electricity for EVs, as well as emerging technologies for integrating renewable energy into charging infrastructure. **[8]**

Q7) a) Discuss safety precautions and maintenance procedures for electric vehicles. Explain the importance of proper handling, storage and maintenance of EV batteries, as well as safety protocols. **[9]**

b) Analyze the reliability issues faced by electric vehicles and charging infrastructure. Identify common failure modes in drivetrains and batteries and discuss troubleshooting techniques and maintenance strategies to ensure reliable operation. **[9]**

OR

Q8) a) Describe the cost considerations associated with electric vehicles and batteries. Discuss factors influencing battery costs, such as materials, manufacturing processes and economies of scale and explore potential strategies for reducing costs and improving affordability. **[9]**

b) Identify and describe the components of a typical charging station. Discuss the roles of components such as power converters, connectors, communication modules, safety features and billing systems. **[9]**

⌘⌘⌘

Total No. of Questions : 8]

SEAT No. :

PB-2493

[Total No. of Pages : 2

[6263]-379

B.E. (Electronics & Computer Engineering)

WIRELESS SENSOR NETWORKS

(2019 Pattern) (Semester - VIII) (410353D) (Elective-VI)

Time : 2½ Hours] *[Max. Marks : 70*

Instructions to the candidates:

1) ***Answer Q1 or Q2, Q3 or Q4, Q5 or Q6, Q7 or Q8.***
2) ***Figures to the right side indicate full marks.***
3) ***Assume Suitable data, if necessary.***

Q1) a) Draw and explain the architecture of Wireless HART Protocol. **[6]**

b) Explain role of Medium Access Protocols (MAC).Explain metrics throughput and delay which decides the performance of Medium Access Protocols (MAC). **[6]**

c) Explain in detail contention based protocol stack and schedule based protocol stack. **[8]**

OR

Q2) a) Explain in detail BLE protocol standard along with its architecture. **[6]**

b) Write short note on Zigbee protocol. **[6]**

c) Write a short note on IEEE802.15.3. Also state the features of same. **[8]**

Q3) a) Explain proximity schemes and ranging schemes for localization in Wireless Sensor Networks. **[8]**

b) What are the issues in designing a routing protocol. Also explain classification of routing protocols. **[8]**

OR

Q4) a) Explain range-based localization and range free localization in Wireless Sensor Networks **[8]**

b) Draw and explain multi-hop Wireless Sensor Network architecture. State the advantages and disadvantages of multi-hop Wireless Sensor Networks. **[8]**

P.T.O.

Q5) a) Explain the following algorithms: **[8]**

i) Load balanced Clustering scheme

ii) Hybrid Energy Efficient Distributed Clustering

b) Explain in detail various types of attacks in WSN. Also elaborate possible solutions for attacks in WSN. **[8]**

OR

Q6) a) Explain the following algorithms: **[8]**

i) Adaptive Distributed Clustering Algorithm

ii) Low Energy Adaptive Clustering

b) Explain in detail security requirements in WSN. Also elaborate challenges in Wireless Sensor Networks. **[8]**

Q7) a) Explain the requirement analysis in WSN. Also explain issues and challenges in providing QoS. **[9]**

b) Explain air pollution monitoring application of WSN along with block diagram. **[9]**

OR

Q8) a) Along with block diagram explain military application of WSN. **[9]**

b) What is need for energy management in WSN. Compare Adhoc and Sensor Networks. **[9]**

⌘⌘⌘

Total No. of Questions : 8]

SEAT No. :

PB-2494

[Total No. of Pages : 2

[6263]-380
B.E.(AIDS)
MACHINE LEARNING
(2019 Pattern) (Semester - VII) (417521)

Time : 2½ Hours] ***[Max. Marks : 70***

Instructions to the candidates:

1) ***Solve Q1 or Q2, Q3 or Q4, Q5 or Q6, Q7 or Q8.***
2) ***Neat diagrams must be drawn wherever necessary.***
3) ***Figures to the right side indicate full marks.***
4) ***Assume suitable data if necessary.***

Q1) a) Explain following evaluation metrics for binary classification. **[8]**

i) Confusion matrix

ii) Accuracy

iii) Precision

iv) Recall

b) Explain support vector machine use for classification. Explain any two kernels used for classification of non-Linear data in support vector machine. **[10]**

OR

Q2) a) What is difference between binary and muiticlass classification. Explain different types of multiclass classifications. **[8]**

b) Explain KNN algorithm used for classification. How value of K is decided? State advantages and limitations of KNN. **[10]**

Q3) a) Explain K means clustering algorithm. State its advantages and disadvantages. **[9]**

b) Explain any two applications of clustering in detail. **[8]**

OR

Q4) a) Why DB Scan algorithm is used for clustering? What are different parameters used DBSCAN algorithm? State limitations of DBSCAN algorithm. **[9]**

b) State different methods used to select value of K in k-means clustering and explain any one method in detail. **[8]**

Q5) a) What is mean by voting in ensemble learning? Explain three types of voting methods. **[9]**

b) Explain Adaboost technique used in ensemble learning, State its advantages and disadvantages. **[9]**

OR

Q6) a) Explain process of stacking. What are its benefits? **[9]**

b) What is ensemble learning? Why it is used in machine learning? What is difference between bagging and boosting? **[9]**

Q7) a) What is reinforcement learning? Explain various parameters of reinforcement learning. What are applications of reinforcement learning? **[9]**

b) Explain bellman equation with respect to markov decision process with the help of example. **[8]**

OR

Q8) a) State Markov property. Explain Markov decision process. **[9]**

b) What is difference between reward and value for a given state? What is mean by policy in reinforcement learning? What is roll of discount factor in reinforcement learning? **[8]**



Total No. of Questions : 8]

SEAT No. :

PB2495

[Total No. of Pages :2

[6263]-381

B.E. (Artificial Intelligence and Data Science)

DATA MODELING AND VISUALIZATION

(2019 Pattern) (Semester- VII) (417522)

Time : 2½ Hours] *[Max. Marks : 70*

Instructions to the candidates:

1) ***Answer Q.1 or Q.2, Q.3 or Q.4, Q.5 or Q.6, Q.7 or Q.8.***
2) ***Neat diagrams must be drawn wherever necessary.***
3) ***Figures to the right side indicate full marks.***
4) ***Assume Suitable data if necessary.***

Q1) a) Explain Presentation Graphics and its types in data visualization. **[8]**

b) Explain Extensibility in data modeling and visualization. **[6]**

c) Write a short note on Exploratory Graphics in data visualization. **[4]**

OR

Q2) a) Explain 3D-Plots in data modeling and visualization. **[8]**

b) Explain the types of Data Visualization with suitable example. **[10]**

Q3) a) Discuss various functions available in matplotlib. **[7]**

b) Explain effective graph layout techniques in data visualization. **[6]**

c) Differentiate Force-directed Techniques and Multidimensional Scaling. **[4]**

OR

Q4) a) Explain Hierarchical Indexing with suitable example. **[7]**

b) Explain Bipartite Graph and its applications. **[6]**

c) Describe the key steps involved in the process of data wrangling. **[4]**

P.T.O.

Q5) a) Discuss Data Ranges and its types with suitable example. **[8]**

b) Explain Group by Mechanics technique in data modeling and visualization. **[6]**

c) Explain the steps involved in Split Apply Combine strategy. **[4]**

OR

Q6) a) Explain Cross Tabulation and its uses with suitable example. **[8]**

b) Write a short note on (Any Two) **[10]**

i) Data Aggregation

ii) Pivot Tables

iii) Periods and Periods Arithmetic

Q7) a) Discuss Data Reconstruction and its types in data modeling and visualization. **[7]**

b) Explain Medical Images and its applications in data modeling and visualization. **[6]**

c) Explain Erwin Data Modeler in data modeling and visualization. **[4]**

OR

Q8) a) Write a short note on (Any Two) **[7]**

i) PET Images

ii) Ultrasound Images

iii) Magnetic Resonance Images

b) Explain ER/Studio with its applications. **[6]**

c) Explain DbSchema Pro Modeler in data modeling and visualization. **[4]**



Total No. of Questions : 8]

SEAT No. :

PB-2496

[Total No. of Pages : 2

[6263]-382

B.E. (Artificial Intelligence and Data Science)

QUANTUM ARTIFICIAL INTELLIGENCE

(2019 Pattern) (Semester - VII) (Elective - III) (417523(A))

Time : 2½ Hours] *[Max. Marks : 70*

Instructions to the candidates:

1) ***Solve questions Q.1 or Q.2, Q.3 or Q.4, Q.5 or Q. 6, Q.7 or Q. 8.***
2) ***Neat diagrams must be drawn wherever necessary.***
3) ***Figures to the right indicate full marks.***
4) ***Assume suitable data if necessary.***

Q1) a) Differentiate the following: Probabilistic Versus Quantum Algorithms. **[6]**

b) Explain the Phase Kick-Back. **[6]**

c) Discuss problems tackle in Grover's search algorithm and State its advantage. **[6]**

OR

Q2) a) Describe Simon's Algorithm. **[6]**

b) Explain with example the Factoring Integers. **[6]**

c) Explain Quantum Part of the Shor's Algorithm. **[6]**

Q3) a) Explain in detail - Quantum Boosting. **[6]**

b) Describe Quantum Neural Networks in detail. **[6]**

c) Describe following with respect to quantum machine learning : **[6]**

i) Regression

ii) Clustering

OR

Q4) a) Explain Quantum Algorithms for linear algebra. **[6]**

b) Describe Variational Quantum algorithms. **[6]**

c) Explain Quantum Support Vector Machines (SVM). **[6]**

P.T.O.

Q5) a) Explain Noise and error models in Quantum Systems. **[6]**

b) Describe Quantum Key Distribution in short. **[6]**

c) Write a short note on Fault Tolerance. **[5]**

OR

Q6) a) Explain the Error Model Encoding. **[6]**

b) Discuss Quantum cryptography and secure communication. **[6]**

c) State & Explain the challenges and limitations of quantum teleportation. **[5]**

Q7) a) Write short note on - Walk on graph. **[6]**

b) Discuss Pennylane: a cross-platform Python library. **[6]**

c) Describe Heutistic Search with example. **[5]**

OR

Q8) a) Explain Terrateca's Quantum Production system. **[6]**

b) Explain Quantum computing for data sciences. **[6]**

c) Discuss Case studies on Quantum-centric supercomputing: The next wave of computing. **[5]**

Total No. of Questions : 8]

SEAT No. :

PB-2497

[Total No. of Pages : 3

[6263]-383

B.E. (Artificial Intelligence and Data Science)

INDUSTRIAL INTERNET OF THINGS

(2019 Pattern) (Semester - VII) (Elective - III) (417523(B))

Time : 2½ Hours] *[Max. Marks : 70*

Instructions to the candidates:

1) ***Solve questions Q.1 or Q.2, Q.3 or Q.4, Q.5 or Q. 6, Q.7 or Q. 8.***
2) ***Neat diagrams must be drawn wherever necessary.***
3) ***Figures to the right indicate full marks.***
4) ***Assume suitable data if necessary.***

Q1) a) Define Industrial Internet of Things (IIoT). List and briefly explain the components of IIoT architecture. **[8]**

b) Draw and explain the Reference Architecture of IIoT. **[5]**

c) Explain the integration of Wireless Sensor Networks (WSN) into the IIoT architecture. **[5]**

OR

Q2) a) Discuss the Industrial Internet Architecture Framework (IIAF). Explain its purpose, key principles and how it guides the design and implementation of IIoT systems. **[10]**

b) Discuss the layers of Industrial IoT (IIoT) architecture. Describe the functionalities and interactions within each layer, focusing on (any 3):**[8]**

i) IIoT Sensing

ii) IIoT Processing

iii) IIoT Communication

iv) IIoT Networking

Q3) a) Compare and contrast the following IIoT cloud platforms w.r.t their features, capabilities and suitability for different industrial applications:**[8]**

i) Cloud of Things (COT) platforms

ii) Predix

iii) PTC ThingWorx

iv) Microsoft Azure

P.T.O.

b) Describe various data visualization techniques commonly used in Industrial IoT (IIoT) applications. Explain how these techniques help in representing complex data sets visually for better understanding and analysis. **[6]**

c) Differentiate between Software as a Service (SaaS), Platform as a Service (PaaS) and Infrastructure as a Service (IaaS), providing examples for each. **[3]**

OR

Q4) a) Discuss the role of Data Analytics in optimizing Industrial IoT (IIOT) systems. Explain how data analytics techniques can extract valuable insights from IIoT-generated data to improve efficiency, predictive maintenance and decision-making processes. **[10]**

b) Explain the concept of Digital Twin in the context of Industrial IoT (IIoT). Discuss the need for Digital Twin technology and its benefits in industrial settings. **[7]**

Q5) a) Explain the importance of security in Industrial IoT (IIoT) deployments. Discuss the potential consequences of security breaches in IoT systems and their impact on industrial operations. **[10]**

b) Discuss the management aspects of cybersecurity in Industrial IoT (IIoT) environments. Explain the roles and responsibilities of stakeholders in managing IIoT security risks and implementing effective cybersecurity policies and procedures. **[7]**

OR

Q6) a) Explain the concept of access control in Industrial IoT (IIoT) environments. Discuss the mechanisms and techniques used to enforce access control policies and permissions in IIoT systems. **[10]**

b) Discuss the importance of identity establishment in IIoT security. Explain the methods and protocols used to establish and manage identities for IIoT devices and users. **[7]**

Q7) a) Explain Smart Logistics and its impact on supply chain management. **[6]**

b) Describe Smart Irrigation and its benefits in agricultural practices. **[6]**

c) Discuss the characteristics and design principles of Industry 4.0. **[6]**

OR

Q8) a) Define Cyber Manufacturing Systems and discuss their importance in modern manufacturing. **[6]**

b) Explain the role of IoT in the Healthcare Service Industry and provide examples of IoT-enabled healthcare solutions. **[6]**

c) Introduce the concept of Industry 5.0 (Society 5.0) and discuss its potential impact on society. **[6]**

Total No. of Questions : 8]

SEAT No. :

PB-2498

[Total No. of Pages : 2

[6263]-384

B.E. (Artificial Intelligence and Data Science)

ENTERPRISE ARCHITECTURE AND COMPONENTS

(2019 Pattern) (Semester - VII) (417523C) (Elective - III)

Time : 2½ Hours] *[Max. Marks : 70*

Instructions to the candidates:

1) ***Solve Q.1 or Q.2, Q.3 or Q.4, Q.5 or Q.6, Q.7 or Q.8.***
2) ***Neat diagrams must be drawn wherever necessary.***
3) ***Figures to the right side indicate full marks.***
4) ***Assume Suitable data if necessary.***

Q1) a) Define the term is architecture governance? Explain the key components of architecture governance? **[9]**

b) List out the key phases of the architecture development process? How can organizations ensure the success of their architecture development process? **[8]**

OR

Q2) a) Why are Architecture Design Principles Important? Explain Architecture Design Principles. **[9]**

b) What is the baseline architecture? Explain the best practices of Architecture implementation. **[8]**

Q3) a) What are the strategies in the context of operational model design techniques? What are common challenges that arise when designing operational models without considering context? **[9]**

b) Differentiate between Enterprise Information architecture and Data architecture. **[8]**

OR

P.T.O.

Q4) a) What is an operational model? Explain Operational Model Relationship with Diagram. **[9]**

b) What is the purpose of using an operational model relationship diagram framework? List out the different tools used to create component diagram. **[8]**

Q5) a) What are the key features of Metadata? Enlist and describe metadata management tools? **[9]**

b) Elaborate process of Creating and Implementing a Metadata Strategy. **[9]**

OR

Q6) a) Explain the five core functions of master data management. **[9]**

b) How do Enterprise Architects apply tools and resources for designing enterprise systems within Enterprise Architecture? **[9]**

Q7) a) What is the role of a business Enterprise Architect? What are Enterprise Business Process Analysis Tools? **[9]**

b) Explain Business Process Model for IT Management Based on Enterprise Architecture. What is the difference between business process architect and enterprise architect? **[9]**

OR

Q8) a) What is enterprise architecture governance? What are Guiding principles of EA governance? **[9]**

b) What are enterprise architecture management tools? Explain the resources used for enterprise architecture. **[9]**

⌘⌘⌘

Total No. of Questions : 8]

SEAT No. :

PB-2499

[Total No. of Pages : 2

[6263]-385

B.E. (Artificial Intelligence and Data Science)

BIOINFORMATICS

(2019 Pattern) (Semester - VII) (417523D) (Elctive - III)

Time : 2½ Hours] ***[Max. Marks : 70***

Instructions to the candidates:

1) ***Solve Q.1 or Q.2, Q.3 or Q.4, Q.5 or Q.6, Q.7 or Q.8.***
2) ***Neat diagrams must be drawn wherever necessary.***
3) ***Figures to the right side indicate full marks.***
4) ***Assume Suitable data if necessary.***

Q1) a) Define computer-aided drug design (CADD) and its role in the drug discovery process. **[9]**

b) Discuss the advantages and limitations of threading as a protein structure prediction method. **[9]**

OR

Q2) a) Describe the key steps involved in a molecular docking simulation, including ligand conformational sampling and scoring functions. **[9]**

b) Describe the application of data science techniques in medical image analysis. **[9]**

Q3) a) Define systems biology and explain its fundamental principles. **[9]**

b) Discuss the importance of network analysis and visualization tools in systems biology. **[9]**

OR

Q4) a) Provide an example of how network analysis and visualization tools have been applied to gain insights into a specific biological process or disease. **[9]**

b) Provide an example of a specific regulatory network and its role in a biological system. **[9]**

P.T.O.

Q5) a) Explain the concept of feature selection and dimensionality reduction in machine learning. **[9]**

b) Provide an example of a dataset where feature selection or dimensionality reduction was crucial for model improvement. **[8]**

OR

Q6) a) Provide an example of a specific gene network analysis task where machine learning, deep learning, or CNNs have provided valuable insights. **[9]**

b) Explain the importance of clustering in pattern recognition and data analysis. **[8]**

Q7) a) Describe the current trends and emerging research areas in the field of biotechnology and life sciences. **[9]**

b) Discuss the role of biotechnology in crop improvement, pest control, and soil remediation. **[8]**

OR

Q8) a) Provide an example of a biotechnological solution that has positively impacted agriculture or environmental conservation. **[9]**

b) Provide an example of a cutting-edge research project or discovery that has the potential to transform the field of biotechnology. **[8]**

⌘⌘⌘

Total No. of Questions : 8]

SEAT No. :

PB2500

[Total No. of Pages : 2

[6263]-386
B.E. (AI & DS)
GPU PROGRAMMING AND ARCHITECTURE
(2019 Pattern) (Semester - VII) (Elective - IV) (417524 A)

Time : 2½ Hours] *[Max. Marks : 70*

Instructions to the candidates:

1) ***Attempt Q.1 or Q.2, Q.3 or Q.4, Q.5 or Q.6, Q.7 or Q.8.***
2) ***Figures to the right side indicate full marks.***
3) ***Neat diagrams must be drawn wherever necessary.***
4) ***Assume suitable data if necessary.***

Q1) a) Describe in detail about CUDA-MEMCHECK. **[6]**

b) Define PTX and its role in CUDA programming. **[6]**

c) Explain the synchronization issues in CUDA? **[6]**

OR

Q2) a) Describe CUDA error handling APIs and explain how they can be used for error checking. **[6]**

b) What are tools and techniques that you should employ for finding and solving CUDA errors? **[6]**

c) Define binary compatibility in CUDA and discuss its importance. **[6]**

Q3) a) What is Kernel? Describe in detail about the features of Kernel programming model **[9]**

b) Discuss in detail about OpenCL memory hierarchy. **[8]**

OR

Q4) a) Define OpenCL. Explain the OpenCL program with example. **[9]**

b) Discuss in detail about Kernel and host device interaction. **[8]**

Q5) a) In brief discuss CSR format for sparse matrix. **[6]**

b) Differentiate serial convolution with parallel convolution. **[6]**

c) Explain the use of prefix sum algorithm with example **[6]**

OR

P.T.O.

Q6) a) Explain strategies for reducing the runtime-memory footprint in parallel computing. **[6]**

b) Describe the working of convolution Algorithm. **[6]**

c) Explain in detail about Heterogeneous Clusters. **[6]**

Q7) a) What is Transport Triggered Architecture (TTA)? Explain the key concepts and benefits of TTA for high-performance computing applications. **[9]**

b) Explain the practical issues and challenges associated with compiling and executing OpenCL applications in a standalone environment. **[8]**

OR

Q8) a) Explain the OpenCL platform model. What are the key components and their roles in the execution of OpenCL programs? **[9]**

b) Elaborate on the role of OpenCL in heterogeneous computing. **[8]**



Total No. of Questions : 8]

SEAT No. :

PB2501

[Total No. of Pages : 2

[6263]-387
B.E. (A.I. & D.S.)
INFORMATION RETRIEVAL
(2019 Pattern) (Semester - VII) (Elective - IV) (417524 B)

Time : 2½ Hours] *[Max. Marks : 70*

Instructions to the candidates:

1) ***Attempt Q.1 or Q.2, Q.3 or Q.4, Q.5 or Q.6, Q.7 or Q.8.***
2) ***Neat diagrams must be drawn wherever necessary.***
3) ***Assume suitable data if necessary***

Q1) a) Define and explain Probabilistic Retrieval. **[4]**

b) Define the following with respect to Information Retrieval: **[6]**

i) Vector Space Model

ii) Term Frequency

iii) Inverse Document Frequency

c) What is the binary independent retrieval model? **[6]**

OR

Q2) a) List the problems associated with n-gram. Explain how these problems are handled. **[6]**

b) List and explain the challenges in Natural language processing. **[4]**

c) Explain with suitable example different levels of NLP. **[6]**

Q3) a) What is the difference between clustering and classification? Can clustering be used for classification purposes? **[6]**

b) What are different types of clustering algorithm? Explain any one of them. **[6]**

c) Explain in detail about naïve Bayes algorithm and its application in text classification. **[6]**

OR

Q4) a) Write partitioning algorithm for clustering. **[10]**

b) Solve Agglomerative hierarchical clustering for single link with example. **[8]**

P.T.O.

Q5) a) Discuss the factors that influence a webpages PageRank score. Discuss the challenges involve in web search engine. **[8]**

b) What is page ranking? Calculate page rank of following web pages. Assume damping factor 0.7. **[10]**

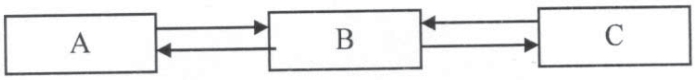

OR

Q6) a) Define Python library is used for web crawling? **[6]**

b) What are the main challenges posed by Web? **[6]**

c) Explain the components of focused web crawlers? **[6]**

Q7) a) Outline the steps to build a recommender system with an example. **[10]**

b) What are the four phases of recommender system? **[8]**

OR

Q8) a) Mulitimedia Information Retrieval. **[8]**

b) What are the different evaluation metric for Recommender system. **[10]**

Total No. of Questions : 8]

SEAT No. :

PB2502

[Total No. of Pages : 2

[6263]-388
B.E. (A.I. & D.S.)
UI / UX DESIGN
(2019 Pattern) (Semester-VII) (Elective-IV) (417524C)

Time : 2½ Hours] *[Max. Marks : 70*

Instructions to the candidates:

1) ***Answer Q1 or Q2, Q3 or Q4, Q5 or Q6, Q7 or Q8.***
2) ***Figures to the right indicate full marks.***
3) ***Neat diagrams must be drawn whenever necessary.***
4) ***Make suitable assumption whenever necessary.***

Q1) a) Explain different human considerations in design. **[6]**

b) Explain golden rules of Interface design. **[6]**

c) How to evaluate Interface design? **[6]**

OR

Q2) a) Explain with an example Usability testing. **[6]**

b) Write a short note on - **[6]**

i) Acceptance Tests

ii) Legal issues in unit design

c) What is information architecture and its importance in UI design? **[6]**

Q3) a) What id direct manipulation? Explain different advantages and disadvantages. **[6]**

b) Write a short note on - Phrasing the Menu. **[6]**

c) Differentiate between menu bar and toolbar. **[5]**

OR

Q4) a) Write a short note on - Interaction with natural language. **[6]**

b) Enlist different interaction styles. **[6]**

c) Explain any 4 graphical menu in detail. **[5]**

P.T.O.

Q5) a) Write a short note on — Selection of Controls. **[6]**

b) Explain drop down and pop up list boxes. **[6]**

c) Explain operable controls in detail. **[6]**

OR

Q6) a) What is presentation control? **[6]**

b) Explain individual windows design and multiple windows design. **[6]**

c) Explain elements of windowing system. **[6]**

Q7) a) What is usability testing? **[6]**

b) Explain Cognitive walkthrough in detail. **[6]**

c) Explain different challenges for information visualization. **[5]**

OR

Q8) a) Differentiate between usability testing and user testing. **[6]**

b) Write a sort note on Eye tracking and A/B testing. **[6]**

c) Explain different guidelines of web design in UI. **[5]**



Total No. of Questions : 8]

SEAT No. :

PB2503

[Total No. of Pages : 2

[6263]-389

B.E. (Artificial Intelligence & Data Science)

OPTIMIZATION ALGORITHMS

(2019 Pattern) (Semester-VII) (417524D) (Elective-IV)

Time : 2½ Hours] *[Max. Marks : 70*

Instructions to the candidates:

1) ***Attempt Q1 or Q2, Q3 or Q4, Q5 or Q6, Q7 or Q8.***
2) ***Neat diagrams must be drawn wherever necessary.***
3) ***Figures to the right indicate full marks.***
4) ***Use of scientific non programmable calculator is allowed.***
5) ***Assume suitable data if necessary.***

Q1) a) Prove that a primal-dual pair of linear problems satisfies-the primal has a optimal solution, through strong duality theorem. **[8]**

b) With Linear-Programming Simplex Method find the basic solution to maximize. **[10]**

$$50x_1 + 60x_2 \text{ subject to: } \begin{bmatrix} 2 & 1 \\ 3 & 4 \\ 4 & 7 \end{bmatrix} \begin{bmatrix} x_1 \\ x_2 \end{bmatrix} = \begin{bmatrix} 300 \\ 509 \\ 812 \end{bmatrix} \text{ and } x_1 \geq 0 \text{ and } x_2 \geq 0$$

OR

Q2) a) Solve the multistage graph with forward approach, represented here. **[10]**

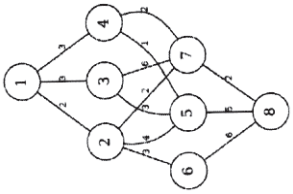

b) Karush-Kuhn-Tucker (IKKT) conditions test as necessary condition elaborate with respect to non linear programrrmig. **[8]**

Q3) a) Solve the equation $a + 2b + 9c + 4d + 7e + 3f = 360$ with Genetic Algorithms approach, stop your calculation after THREE iterations and compare how closely you produced an answer. **[9]**

b) With suitable example explain in detail the Boltzmann Distribution. **[8]**

OR

P.T.O.

Q4) a) Explain the behavior of Simulated Annealing in practice and tunneling **[9]**

b) Solve the following linear equation with genetic algorithms with given optimization function. **[8]**

$$a + 2b + 3c = 10 \qquad (1)$$

$$f(x) = (a + 2b + 3c) - 10 \qquad (2)$$

To speed up the calculations values of a,b,c restrict between 0 to 10

Q5) a) The knapsack with capacity m and Items with which sack to be filled optimally to get maximum profit, there weights and profits are mentioned $W = \{10, 20, 7, 9, 8\}$ and $P = \{25, 40, 35, 55, 50\}$ respectively. Apply Binary PSO and solve the problem. **[10]**

b) Write down Particle Swarm Optimization Algorithm along with its mathematical treatment of velocity applied on particles with a formulation given in 3. **[8]**

$$V_i^{t+1} = W.V_i^t + c_1 U_1^t (P_{b_1} - P_i^t) + c_2 U_2^t (g_b^t - P_i^t) \qquad (3)$$

OR

Q6) a) Apply ant colony optimization problem on traveling salesman problem mentioned. **[10]**

in this matrix $\begin{bmatrix} \infty & 2 & 4 & 6 \\ 2 & \infty & 3 & 8 \\ 4 & 3 & \infty & 7 \\ 6 & 8 & 7 & \infty \end{bmatrix}$

b) In differential evaluation how the parameters of convergence chooses and analysis is carried out, explain it briefly. **[8]**

Q7) a) Write and explain the behavior of Firefly Algorithm with variation of light intensities. **[9]**

b) Write and explain framework for self tuning of an algorithms and list parameters with short description. **[8]**

OR

Q8) a) Let us assume a seen where Dataset $D^{m \times n}$ contains n features, we will selecting most suitable further for machine learning activity. use Batman binary algorithm and complete task with small example. **[9]**

b) Write down the application areas where firefly algorithm can be used in detail. **[8]**



Total No. of Questions : 8]

SEAT No. :

PB2504

[Total No. of Pages :2

[6263]-390
B.E. (Artificial Intelligence & Data Science)
COMPUTATIONAL INTELLIGENCE
(2019 Pattern) (Semester-VIII) (417530)

Time : 2½ Hours] *[Max. Marks : 70*

Instructions to the candidates:

1) ***Solve Q.1 or Q.2, Q.3 or Q.4, Q.5 or Q.6, Q.7 or Q.8.***
2) ***Figures to the right indicates full marks.***

Q1) a) What are the key performance measures used to evaluate the effectiveness of evolutionary algorithms? **[6]**

b) What is swarm intelligence, and how does it differ from traditional optimization techniques? **[6]**

c) Define Genetic programming and its application in symbolic regression? **[6]**

OR

Q2) a) Discuss the importance of selection in evolutionary algorithms and its impact on the convergence of the algorithm? **[6]**

b) Explain the concept of population in evolutionary computing and its significance in the optimization processes? **[6]**

c) Compare and contrast genetic algorithms, evolution strategies, evolutionary programming. **[6]**

Q3) a) Explain the concept of an individual in the context of genetic algorithms and its role in the optimization process? **[6]**

b) Explain the concept of Messy Genetic Algorithm? **[6]**

c) Write the principles of the Holland Classifier system and its application? **[5]**

OR

Q4) a) Describe the process of selection in genetic algorithms, including the different selection strategies used? **[6]**

b) What condition determines when a genetic algorithm stops iterating and returns the best solution found? **[6]**

c) Explain the concept of initialization in genetic algorithms and its role in creating the initial population? **[5]**

P.T.O.

Q5) a) Compare and contrast Word2Vec and GloVe in terms of how they generate word embeddings? **[9]**

b) Explain the architecture of a Seq2Seq model and its role in neural machine translation? **[9]**

OR

Q6) a) How does BERT (Bidirectional Encoder Representations from Transformers) work, and what are its advantages over traditional language models? **[9]**

b) Describe the TF-IDF (Term Frequency-Inverse Document Frequency) weighting scheme and its significance in text representation? **[9]**

Q7) a) Explain the concept of Artificial Immune Models and their significance in computational intelligence? **[9]**

b) Describe the principles of Network Theory Model and its application in understanding immune system behaviour? **[8]**

OR

Q8) a) Discuss the role of antigen-presenting cells in immune activation and its representation in the Dendritic Cell Model? **[9]**

b) Discuss the limitations and challenges of applying Artificial Immune System models in real-world applications? **[8]**

Total No. of Questions : 8]

SEAT No. :

PB2505

[Total No. of Pages : 2

[6263]-391
B.E.(AI&DS)
DISTRIBUTED COMPUTING
(2019 Pattern)(Semester - VIII)(417531)

Time : 2½ Hours] *[Max. Marks :70*

Instructions to the candidates:

1) ***Answer Q1or Q2, Q3 or Q4, Q5 or Q6, Q7 or Q8.***
2) ***Neat diagrams must be drawn Wherever necessary.***
3) ***Figures to the right indicate full marks.***
4) ***Use electronic pocket calculator is allowed.***

Q1) a) List and explain any one variant of Paxos in detail. **[6]**

b) Explain Fault Tolerance and Recovery in context of Distributed systems. **[6]**

c) Explain reinforcement Learning for Dynamic Load Balancing. **[6]**

OR

Q2) a) What is consensus algorithms? Explain any one algorithm. **[6]**

b) Explain Genetic Algorithms for Task Scheduling. **[6]**

c) Compare Centralized Load Balancing & Distributed Load Balancing Techniques. **[6]**

Q3) a) Explain Systems and Architectures for Distributed Machine Learning. **[9]**

b) Write note on **[8]**
   i) Federated Learning,
   ii) Hogwild
   iii) Elastic Averaging SGD

OR

Q4) a) What is Apache Spark? Explain working of Apache Spark. **[9]**

b) Explain how integration of AI algorithms in distributed systems can help in Intelligent Resource Management, Anomaly Detection. **[8]**

P.T.O.

Q5) a) Explain the Big data processing frameworks in distributed computing. **[6]**

b) Differentiate between SIMD and MIMD. **[6]**

c) Elaborate various scalable data ingestion methods used in distributed computing environments. **[6]**

OR

Q6) a) Explain how AI and data science can be applied for large-scale data processing and analytics. **[6]**

b) Compare SISD and MISD **[6]**

c) Discuss about various types of real-time analytics used in distributed computing systems. **[6]**

Q7) a) Explain Anomaly as well as Behavior AI-based Intrusion Detection&Threat Mitigation Techniques **[9]**

b) Explain how can Secure Multi-Party Computation(SMPC)be effectively implemented to ensure confidentiality and privacy preservation. **[8]**

OR

Q8) a) Enlist the various security challenges in distributed systems? Elaborate any three challenges in detail? **[9]**

b) Write a Short Note a Threat Hunting and Visualization. **[8]**

Total No. of Questions : 8]

SEAT No. :

PB-2506

[Total No. of Pages : 2

[6263]-392

B.E. (Artificial Intelligence and Data Science)

VIRTUAL REALITY AND GAME DEVELOPMENT

(2019 Pattern) (Semester - VIII) (417532 A) (Elective - V)

Time : 2½ Hours] *[Max. Marks : 70*

Instructions to the candidates :

1) ***Answer Q.1 or Q.2, Q.3 or Q.4, Q.5 or Q.6, Q.7 or Q.8.***
2) ***Figures to the right indicate full marks.***
3) ***Neat diagrams must be drawn wherever necessary.***
4) ***Make suitable assumptions whenever necessary.***

Q1) a) Describe the Methodology and terminology of human factors. **[9]**

b) Evaluate the importance of testbed evaluation of universal VR tasks in assessing user performance. **[9]**

OR

Q2) a) Discuss the role of the eye, the ear, and somatic senses in human perception and how they influence the design of VR environments. **[9]**

b) Enlist the various VR tools? Explain any two tools in details. **[9]**

Q3) a) Compare and contrast designer-centric and player-centric design goals in video game development. **[9]**

b) Define ludology and Describe the MDA framework in detail. **[8]**

OR

Q4) a) Discuss the importance of story and character development within the context of game design. **[8]**

b) Detail the procedure of the game testing and what are various methods of playtesting. **[9]**

P.T.O.

Q5) a) Illustrate the steps to install and configure blender software on Windows environment. **[9]**

b) Distinguish between 2D and 3D models in detail. **[9]**

OR

Q6) a) List five applications of blender tool in AR/VR gaming. **[9]**

b) Analyze the steps to create 2D and 3D images in blender respectively. **[9]**

Q7) a) List the applications and features of VR gaming respectively. **[9]**

b) Mention the impact of hardware limitations on the development and adoption of VR games. **[8]**

OR

Q8) a) Describe three impacts of Artificial Intelligence on VR game. **[9]**

b) Differentiate between heuristic and non heuristic search methods of AI. **[8]**

▽▽▽▽

Total No. of Questions : 8]

SEAT No. :

[Total No. of Pages : 2

PB-2507

[6263]-393

B.E. (Artificial Intelligence and Data Science)

BIG DATA ANALYTICS

(2019 Pattern) (Semester - VIII) (417532B) (Elective - V)

Time : 2½ Hours] *[Max. Marks : 70*

Instructions to the candidates:

1) ***Answer Q1 or Q2, Q3 or Q4, Q5 or Q6, Q7 or Q8.***
2) ***Neat diagrams must be drawn wherever necessary.***
3) ***Figures to the right side indicate full marks.***
4) ***Use of non programmable electronic calculator is allowed.***
5) ***Assume suitable/standard data if necessary.***

Q1) a) What are the primary methods and functions for importing and exporting data in R and how can they be utilized effectively? **[8]**

b) How can data analysts detect and address dirty data using visualizations and statistical techniques in R and what are the implications of anomalies in datasets on decision-making processes? **[10]**

OR

Q2) a) With the help of neat diagram explain the phases of Data Analytics life cycle. **[8]**

b) What are the different attribute types in data analysis, and how are they categorized? How does R handle various data types, such as numeric, character, logical, and factors? **[10]**

Q3) a) Explain the following terms with respect to Exploratory data analysis. **[10]**

i) Data Sourcing
ii) Data Cleaning
iii) Univariate analysis
iv) Bi-variate/Multivariate analysis

b) What are the essential steps in data exploration and how do they contribute to uncovering insights and patterns within a dataset? **[7]**

OR

Q4) a) How do ensemble methods such as bagging, boosting, AdaBoost and Random Forest contribute to improving classification accuracy in machine learning models? **[10]**

b) How does the utilization of a confusion matrix aid in the evaluation and selection of models. **[7]**

P.T.O

Q5) a) What are the challenges associated with visualizing big data and how do these challenges impact the effectiveness and efficiency of data analysis and decision-making processes? **[10]**

b) How does Tableau facilitate effective data visualization and what are some advanced techniques or features within Tableau that can be utilized to create insightful and interactive visualizations for complex datasets?**[8]**

OR

Q6) a) What are the key features and functionalities of the Google Chart API and how does it enable developers to create dynamic and interactive charts and visualizations for web applications? **[8]**

b) What are the various types of data visualization techniques available to data analysts? **[10]**

Q7) a) In what ways does financial data analytics leverage big data technologies to drive insights, mitigate risks and enhance decision-making processes within the financial industry? **[10]**

b) How does Apache HBase contribute to efficient data storage and retrieval in big data environments **[7]**

OR

Q8) a) How does the Semantria tool streamline the data collection process and what features or capabilities does it offer that make it a valuable asset for businesses seeking to gather and analyze large volumes of unstructured data from various sources? **[10]**

b) How does Mozenda serve as an effective data filtering and extraction tool? **[7]**



Total No. of Questions : 8]

SEAT No. :

[Total No. of Pages : 2

PB-2508

[6263]-394

B.E. (Artificial Intelligence and Data Science)

SOFTWARE DEVELOPMENT FOR PORTABLE DEVICES

(2019 Pattern) (Semester - VIII) (417532C) (Elective - V)

Time : 2½ Hours] *[Max. Marks : 70*

Instructions to the candidates:

1) ***Answer Q1 or Q2, Q3 or Q4, Q5 or Q6, Q7 or Q8.***
2) ***Neat diagrams must be drawn wherever necessary.***
3) ***Assume suitable data if necessary.***

Q1) a) Explain Location Privacy to find your current location in detail with an example. **[9]**

b) Explain hardware support and devices Using the Camera for Taking Pictures and Camera Properties. **[9]**

OR

Q2) a) Detail the concepts of Monitoring Location Provider Status and Availability **[9]**

b) Write a short note on Reverse Geocoding and Forward Geocoding. **[9]**

Q3) a) List Android Wear Devices? Explain one of them in detail with suitable examples. **[9]**

b) Explain Android Wear and its platform with example. **[9]**

OR

Q4) a) Write short note on Wear Debugging via USB. **[9]**

b) What are the Enabling Developer Mode and Debugging Settings on your Android Wear device? **[9]**

Q5) a) Explain Google Permission Groups and Fitness Scopes? **[9]**

b) What are Google Fit Data Types? Explain them in detail. **[9]**

OR

P.T.O

Q6) a) What are Google Fit Developer Responsibilities? **[9]**

b) Write short Note on Android Databases. **[9]**

Q7) a) Explain the concept of Real world Application for Fitness, Health and Medical with an example. **[8]**

b) Can we use Wearable devices in Civic, Government and Democracy if yes then explain in detail? **[8]**

OR

Q8) a) Explain how we can use portable devices at Gaming place and Workplace. **[8]**

b) Explain in Variety of wearable devices. **[4]**

c) Write a detailed note on Home Automation as a real-world application of portable devices. **[4]**



Total No. of Questions : 8]

SEAT No. :

PB-2509

[Total No. of Pages : 2

[6263]-395

B.E. Artificial Intelligence and Data Science

DEEP LEARNING

(2019 Pattern) (Semester - VIII) (417532D) (Elective - V)

Time : 2½ Hours] *[Max. Marks : 70*

Instructions to the candidates:

1) ***Answer four questions Q1 or Q2, Q3 or Q4, Q5 or Q6, Q7 or Q8.***
2) ***Neat diagrams must be drawn wherever necessary.***
3) ***Assume suitable data if necessary.***

Q1) a) What is pooling in CNNs? Why is it used? Explain the difference between max pooling and average pooling. **[9]**

b) How do you determine the number of filters in each convolutional layer? **[5]**

c) Define convolutional neural network (CNN), and how does it differ from other types of neural networks? **[4]**

OR

Q2) a) Explain the concept of padding in CNNs. Why is it used? What are strides in CNNs? **[9]**

b) Describe the typical architecture of a CNN. **[5]**

c) What is the main purpose of using CNNs in deep learning? **[4]**

Q3) a) What are some common performance metrics used to evaluate RNNs? How do these metrics differ for different applications of RNNs? **[9]**

b) Describe the long short-term memory (LSTM) unit and its components. **[8]**

OR

Q4) a) What is the difference between recurrent neural networks (RNNs) and feedforward neural networks? **[8]**

b) What are hyperparameters in the context of neural networks? How do researchers select appropriate hyperparameters for training RNNs? **[9]**

P.T.O

Q5) a) What is a generative adversarial network (GAN), and how does it work to generate realistic synthetic data? **[9]**

b) Describe different types of GANs, How do these types of GANs differ in their architecture and training? **[9]**

OR

Q6) a) How are deep generative models used in machine learning and artificial intelligence? **[8]**

b) What are some common challenges of using GANs, and how can they be addressed in practice? **[7]**

c) What are some applications of GANs in computer vision? **[3]**

Q7) a) How can reinforcement learning be applied to play Tic-Tac-Toe? What are the key components of a reinforcement learning algorithm for playing Tic - Tac. **[8]**

b) What is deep reinforcement learning, and how does it combine deep learning with reinforcement learning? **[9]**

OR

Q8) a) Explain the concept of a Markov Decision Process. What are the main components of an MDP? **[6]**

b) Describe the architecture of a deep Q recurrent network. **[6]**

c) What are some of the main challenges faced in reinforcement learning? **[5]**



Total No. of Questions : 8]

SEAT No. :

PB2510

[Total No. of Pages : 3

[6263]-396

B.E. (Artificial Intelligence and Data Science)

AUGMENTED REALITY

(2019 Pattern) (Semester-VIII) (417533 A) (Elective-VI)

Time : 2½ Hours] *[Max. Marks : 70*

Instructions to the candidates:

1) ***Answer Q.1 or Q.2, Q.3 or Q.4, Q. 5 or Q. 6, Q. 7 or Q. 8.***
2) ***Neat diagrams must be drawn wherever necessary***
3) ***Make suitable assumptions if necessary***
4) ***Figures to the right indicate full marks.***

Q1) a) Briefly explain the differences between marker tracking and natural feature tracking in Augmented Reality. Discuss the advantages and disadvantages of each approach. **[9]**

b) Discuss the various types of software used for creating content specifically for Augmented Reality applications. Briefly mention two popular software options with their functionalities. **[9]**

OR

Q2) a) What is Simultaneous localization and Mapping (SLAM)? How does SLAM contribute to robust outdoor Augmented Reality experiences? **[9]**

b) How does computer vision play a role in user interaction within Augmented Reality experiences? **[9]**

Q3) a) Compare and contrast the three main AR techniques: Marker-based, Marker-less, and Location-based. Briefly describe a scenario where each technique would be most beneficial. **[9]**

b) Mathematical representations can be crucial in AR. Explain the concept of matrix multiplication and its potential role in AR systems. **[8]**

OR

P.T.O.

Q4) a) Explain the concept of marker camera pose in Marker-based AR. How is this information used to integrate virtual content with the real world? **[9]**

b) Describe the different methods used for visual tracking in AR. Briefly explain the concept of feature-based tracking and how it differs from hybrid tracking approaches. **[8]**

Q5) a) Imagine you're building an AR system. Explain the role of each of the following components: **[9]**

i) Scene Generator

ii) Tracking System

iii) Display

b) Distinguish between Virtual Retinal Displays (VRDs) and Monitor-Based systems used in AR. Explain the key advantage of each technology. **[9]**

OR

Q6) a) AR systems require constant monitoring to function smoothly. Discuss two functionalities of a monitoring system in AR and how they contribute to the overall user experience. **[9]**

b) Beyond the core functionalities, discuss potential limitations or challenges associated with two of the following AR device types: **[9]**

i) Optical See-Through HMDs

ii) Video See-through systems

Q7) a) Cloud services are playing an increasingly important role in AR. Describe how cloud-based solutions can benefit AR applications. **[9]**

b) Imagine you're developing an AR application for weather prediction. Explain how AR could be used to visualize weather data in a more immersive and informative way. **[8]**

OR

Q8) a) Beyond healthcare, AR has applications across various industries. Choose Two of the following and provide a brief description of how AR could be used in each: **[9]**

i) Education

ii) Agriculture

iii) Civil Engineering

iv) Architecture

v) Archaeology

vi) Crime and Security

vii) Games

b) AR system require constant monitoring to function smoothly. Discuss two functionalities of a monitoring system in AR and how they contribute to the overall user experience. **[8]**

● ● ●

Total No. of Questions : 8]

SEAT No. : [ ]

PB2511

[Total No. of Pages : 3

[6263]-397

B.E. (Artificial Intelligence and Data Science)

BUSINESS INTELLIGENCE

(2019 Pattern) (Semester-VIII) (417533 B) (Elective-VI)

Time : 2½ Hours] ***[Max. Marks : 70***

Instructions to the candidates:

1) ***Answer Q.1 or Q.2, Q.3 or Q.4, Q. 5 or Q. 6, Q. 7 or Q. 8.***
2) ***Neat diagrams must be drawn wherever necessary***
3) ***Assume suitable data if necessary.***
4) ***Figures to the right indicate full marks.***

Q1) a) Evaluate the impact of Data Duplication on the overall performance and efficiency of a data warehouse **[8]**

b) Explain the concepts of ETL Architecture, Extraction, Transformation, and Loading (ETL) in the context of Business Intelligence. **[5]**

c) Explain the concept of Change Data Capture and its significance in data provisioning. **[5]**

OR

Q2) a) Analyse the role of Lookups in the transformation process of ETL. **[8]**

b) Create a simplified data mart and explain its purpose in a BI system. **[5]**

c) Describe the key components of Data Provisioning, including Data Quality, Data Profiling, and Data Enrichment. **[5]**

Q3) a) Evaluate the effectiveness of different methods of Data discretization in improving the interpretability of data. **[8]**

b) Describe the significance of Data Reduction in the context of large datasets, and explain the methods of Sampling. **[5]**

c) Identify the types of data affected by noise and explain their impact on data quality. **[4]**

OR

P.T.O.

Q4) a) Compare and contrast Feature Selection and Principal component Analysis (PCA) in terms of their applicability and limitations. **[8]**

b) Differentiate between univariate, Bivariate and Multivariate analysis. **[5]**

c) Discuss the importance of Data Exploration in the data analysis pipeline.**[4]**

Q5) a) Consider the following dataset and we will find frequent item sets and generate association rules for them using apriori algorithm, consider minimum support count is 2 & minimum confidence is 60% **[9]**

TID	Items
T1	11, 12, 15
T2	12, 14
T3	12, 13
T4	11, 12, 14
T5	11, 13
T6	12, 13
T7	11, 13
T8	11, 12, 13, 15
T9	11, 12, 13

b) Define Bayesian methods and Logistic Regression in the context of classification. **[5]**

c) List and explain the key components involved in the evaluation of regression models. **[4]**

OR

Q6) a) Explain logistic regression with example considering relevant variables and data. **[9]**

b) Discuss the principles underlying the Apriori Algorithm for association rule mining. **[5]**

c) Define Hierarchical methods in clustering and describe their characteristics. **[4]**

Q7) a) Evaluate the benefits and challenges of integrating Cloud Computing with Business Intelligence. **[9]**

b) Explain the importance of Business Intelligence in enhancing Customer Relationship Management strategies. **[5]**

c) Provide examples of Business Intelligence applications in the Manufacturing Industry. **[3]**

OR

Q8) a) Create a plan for integrating Web 2.0 and Online Social Networking features into existing Business Intelligence systems. **[9]**

b) Describe the impact of Business Intelligence on Healthcare Monitoring processes and outcomes. **[5]**

c) List and briefly explain the applications of Business Intelligence in the Higher Education sector. **[3]**

● ● ●

Total No. of Questions : 8]

SEAT No. :

PB2512

[Total No. of Pages : 2

[6263]-398

B.E. (Artificial Intelligence and Data Science)

INFORMATION SYSTEMS MANAGEMENT

(2019 Pattern) (Semester-VIII) (Elective-VI) (417533 C)

Time : 2½ Hours] ***[Max. Marks : 70***

Instructions to the candidates:

1) ***Answer Q.1 or Q.2 and Q.3 or Q.4 and Q.5 or Q. 6 and Q. 7 or Q. 8.***
2) ***Neat diagrams must be drawn whenever necessary.***
3) ***Figures to the right indicate full marks.***
4) ***Assume suitable data, if necessary.***

Q1) a) What is Business Intelligence? **[6]**

b) Explain in brief: Types of Knowledge Management System. **[6]**

c) Write a short note on: "Decision Making a Process" **[6]**

OR

Q2) a) Write a short note on knowledge Network systems. **[6]**

b) What are the important dimensions of knowledge? **[6]**

c) What are the requirements for a knowledge work system. **[6]**

Q3) a) What are the methodologies used for modelling and designing systems.**[9]**

b) What are the dimensions of project Risk? Enlist costs and benefits of IS. **[8]**

OR

Q4) a) What are the concluding steps for the system development process?**[9]**

b) Enlist the alternative system building approaches. What are the steps involved in Prototyping? **[8]**

P.T.O.

Q5) a) What is CRM? Enlist types of CRM. **[6]**

b) Explain benefits and challenges of SCM. **[6]**

c) What is Enterprise systems? How it works? **[6]**

OR

Q6) a) What are the three phases of CRM? **[6]**

b) What is SCM.What are the Objectives of SCM? **[6]**

c) Write a short note on "Business values of Enterprise Systems" **[6]**

Q7) a) Write a short note on E-Commerce Today. **[5]**

b) What is Revenue Model. Explain the types of revenue models for E-Commerce. **[8]**

c) Write a short note on Location Based Services and Applications. **[4]**

OR

Q8) a) What are the types of E-Commerce? **[5]**

b) Explain any 4 types of E-Commerce business models. **[4]**

c) What are digital goods? Compare the Digital Market with the Traditional Market. Explain the term "Wisdom of Crowds". **[8]**

● ● ●

Total No. of Questions : 8]

SEAT No. : ____

PB2513

[Total No. of Pages : 2

[6263]-399

B.E. (Artificial Intelligence and Data Science)

REINFORCEMENT LEARNING

(2019 Pattern) (Semester-VIII) (Elective-VI) (417533 D)

Time : 2½ Hours] ***[Max. Marks : 70***

Instructions to the candidates:

1) ***Answer Q.1 or Q.2, Q.3 or Q.4, Q. 5 or Q. 6, Q. 7 or Q. 8.***
2) ***Neat diagrams must be drawn whenever necessary.***
3) ***Figures to the right side indicate full marks.***
4) ***Assume suitable data, if necessary.***

Q1) a) What is dynamic programming, And how does it apply to solving Markov Decision Processes? **[9]**

b) State the Banach Fixed point Theorem and its significance in dynamic programming. **[9]**

OR

Q2) a) Explain the contraction mapping property of Bellman expectation and optimality operators. **[9]**

b) State and explain the principle of optimality in the context of MDPs. **[9]**

Q3) a) What are monte Carlo Methods, and how are they used in reinforcement learning. **[9]**

b) Explain the idea behind per-decision Importance Sampling and its significance in off-policy learning. **[8]**

OR

Q4) a) What is the difference between On-policy and Off-policy learning in reinforcement learning. **[8]**

b) What is Monte Carlo Tree Search (MCTS), and where is it commonly used? **[9]**

P.T.O.

Q5) a) Enlist the advantages and disadvantages of using model-based and model-free approaches in reinforcement learning. **[9]**

b) Describe the Q-learning algorithm and its main components. **[9]**

OR

Q6) a) Discuss the double DQN algorithm and its advantages over traditional DQNs. **[9]**

b) Explain the concept of Temporal difference (TD) learning in reinforcement learning. **[9]**

Q7) a) How can an agent adapt when the model used for planning is inaccurate? **[9]**

b) How do Rollout Algorithms help in approximating the value function and improving decision-making? **[8]**

OR

Q8) a) Explain the Dyna architecture and how it integrates planning, acting, and learning. **[8]**

b) Discuss the advantages and limitations of using real-time Dynamic programming. **[9]**

● ● ●

Total No. of Questions : 8]

SEAT No. :

PB-2514

[Total No. of Pages : 2

[6263]-400
B.E.(Mechatronics Engineering)
ROBOT OPERATING SYSTEM
(2019 Pattern) (Semester - VII) (417541)

Time : 2½ Hours] ***[Max. Marks : 70***

Instructions to the candidates:

1) ***Solve Q1 or Q2, Q3 or Q4, Q5 or Q6, Q7 or Q8.***
2) ***Neat diagrams must be drawn wherever necessary.***
3) ***Figures to the right side indicate full marks.***
4) ***Assume suitable data if necessary.***

Q1) a) What is VALII? Discuss the general commands used for VALII. **[6]**

b) Explain the following commands: **[5]**

i) CLOSE 10MM

ii) GRASP 40, 100

iii) SIGNAL 4 ON

iv) SIGNAL 10 OFF

v) WAIT10 ON

c) Discuss the first and second generation of Robot Programming language. **[7]**

OR

Q2) a) Explain the various components of the Robot language structure that are coordinated with the help of diagrams. **[6]**

b) Write any six commonly used monitor mode commands and explain each of them. **[6]**

c) Write a program for Palletizing applications using VALII. **[6]**

Q3) a) Write a program control statement, constants, and Variables for AML. **[5]**

b) What is AML and its elements? **[5]**

c) Write the motion instructions for Pick and Place using Industrial Robot. **[7]**

OR

P.T.O

Q4) a) Write a subroutine in Rapid language for Industrial Robot. **[5]**

b) Explain the sensor commands and motion control for the AML language. **[5]**

c) What is MOVE Master command language? Write the syntax and explain each line syntax in detail. **[7]**

Q5) a) Explain Robot Studio, collision detection, and Robot economics. **[5]**

b) Explain Jogging and robot components in Robot studio. **[5]**

c) Explain input and output signals in Robot Studio. **[8]**

OR

Q6) a) What is soft Robotics? Explain it with the application. **[5]**

b) What is RPA and its aspects? Explain. **[5]**

c) Write the process chart to demonstrate the issue and potential solutions of multiple robot and machine interference in a virtual robotics environment. **[8]**

Q7) a) Explain the distributed lag models, cobweb model, and continuous system model. **[10]**

b) What is the Monte Carlo method? Explain. **[7]**

OR

Q8) a) Write the advantages and disadvantages of simulation. **[10]**

b) What do you understand by Analog and Hybrid Simulation? **[7]**



Total No. of Questions : 8]

SEAT No. : ____

PB2515

[Total No. of Pages :2

[6263]-401

B.E. (Mechatronics Engineering)

DATA COMMUNICATION

(2019 Pattern) (Semester- VII) (417542)

Time : 2½ Hours] ***[Max. Marks : 70***

Instructions to the candidates:

1) ***All questions are compulsory i.e. Solve Q.1 or Q.2, Q.3 or Q.4, Q.5 or Q.6 and Q.7 or Q.8.***
2) ***Use of electronic pocket calculator is allowed.***
3) ***Neat diagrams must be drawn wherever necessary.***
4) ***Assume Suitable data if necessary.***

Q1) a) Compare Wide band FM with Narrow band FM. **[8]**

b) Explain in details Pre-emphasis and De-emphasis. **[9]**

OR

Q2) a) Write a short note on

i) Phase lock Loop

ii) Balanced Slope Detector **[8]**

b) Explain the following terms

i) Deviation Sensitivity

ii) Deviation Ratio

iii) Bandwidth Required for FM **[9]**

Q3) a) Explain the following modulation Techniques

i) BASK

ii) M-ARY FSK **[8]**

b) Explain in details Pulse Desperation, Coherent and non-coherent. **[9]**

OR

Q4) a) Explain the following modulation Techniques

i) BPSK

ii) QPSK **[8]**

b) Write a short note on M-ARY PSK Transmitter and Receiver. **[9]**

P.T.O.

Q5) a) Explain half wave dipole and folded wave dipole with their advantages, disadvantages and applications. **[9]**

b) Write short note on

i) Effective Area

ii) Helical Antenna **[9]**

OR

Q6) a) Define Antenna. Explain the different parameters of antenna. **[9]**

b) Write short note on **[9]**

i) Reciprocity Principle

ii) Effective Length

Q7) a) With the help of suitable diagram explain WLAN state its type. **[9]**

b) Explain the following systems with their advantages, disadvantages and applications

i) 1G

ii) 3G **[9]**

OR

Q8) a) Write a short note on multipath effect in Mobile Communication also state the parameters for the same. **[9]**

b) Explain the cellular system. Give its advantages, disadvantages and applications. **[9]**

Total No. of Questions : 8]

SEAT No. :

[Total No. of Pages : 2

PB-2516

[6263]-402
B.E.(Mechatronics Engineering)
MICRO ELECTRO MECHANICAL SYSTEMS
(2019 Pattern) (Semester - VII) (417543)

Time : 2½ Hours] ***[Max. Marks : 70***

Instructions to the candidates:

1) ***Solve Q1 or Q2, Q3 or Q4, Q5 or Q6, Q7 or Q8.***
2) ***Neat diagrams must be drawn wherever necessary.***
3) ***Use of non - programmable calculator is allowed.***
4) ***Assume suitable data if necessary.***

Q1) a) Explain in brief the different materials used in MEMS. [9]

b) Explain in brief the bulk and surface micro-machining with neat diagram. [9]

OR

Q2) a) With neat diagram explain the process of Photolothography technique. [9]

b) Write a short note on LIGA. [9]

Q3) a) Write a short note on Scaling in electricity. [9]

b) Explain the concept Scaling in fluid mechanics. [9]

OR

Q4) a) With neat diagram the Scaling in electro- magnetic forces. [9]

b) Explain in brief the Scaling in heat transfer. [9]

Q5) a) Explain the concept of interferometry in MEMS with diagram. [9]

b) With neat diagram explain the STM. [8]

OR

P.T.O

Q6) a) With neat diagram explain SEM. [9]

b) Explain in detail the different Topography methods with suitable diagram. [8]

Q7) a) Explain in detail the Carbon Nano- Tubes with their properties. [9]

b) Write a short note on Nano Mechanical Systems (NEMS). [8]

OR

Q8) a) Write a short note on fabrication methods in CNT. [9]

b) Explain in detail the Nano- Indention technique. [8]



Total No. of Questions : 8]

SEAT No. :

[Total No. of Pages : 2

PB-2517

[6263]-403
B.E.(Mechatronics Engineering)
IMAGE PROCESSING & COMPUTER VISION
(Elective - III) (2019 Pattern) (Semester - VII) (417544-A)
(Theory)

Time : 2½ Hours] *[Max. Marks : 70*

Instructions to the candidates:

1) ***Solve Q1 or Q2, Q3 or Q4, Q5 or Q6, Q7 or Q8.***
2) ***Neat diagrams must be drawn wherever necessary.***
3) ***Figures to the right indicates full marks.***
4) ***Use of calculator is allowed.***
5) ***Assume suitable data if necessary.***

Q1) a) Given matrix Ix and Iy for an image. **[9]**

$$Ix = \begin{bmatrix} 4 & 7 & 6 \\ 8 & 8 & 7 \\ 8 & 6 & 5 \end{bmatrix} \qquad Iy = \begin{bmatrix} 4 & 8 & 8 \\ 8 & 6 & 7 \\ 6 & 6 & 4 \end{bmatrix}$$

Find out, given area of the image is corner or not using Harris Corner Detection Algorithm.

b) Explain Scale Invariant Feature Transform in detail. **[9]**

OR

Q2) a) Explain Texture Descriptor with Local Binary Pattern (LBP) in detail.**[8]**

b) Explain HOG (Histogram of Oriented Gradient) in detail with example.**[10]**

Q3) a) What is Object Detection in Computer Vision? **[5]**

b) Explain Pattern RecognitionSystem? What are components of pattern recognition System? **[5]**

c) What are different parameter Estimation Techniques? Explain Maximum Likelihood Estimation in detail. **[7]**

OR

P.T.O

Q4) a) Explain Image Classification with Localization. **[8]**

b) What is Dimension Reduction? **[5]**

c) What is Learning and Adaptation in Machine Learning? **[4]**

Q5) a) Give opencv code for following shape drawing functions: **[6]**

i) Circle

ii) Rectangle

b) Give Opencv code for following operation: **[6]**

i) Accessing and modifying pixel values of an image

ii) Accessing Image properties

c) Explain Image Blurring Technique. Give advantages of Image Blurring. **[5]**

OR

Q6) a) What are Image Contours and Write steps for finding and drawing contours using opencv. **[6]**

b) Explain Image Thresholding Technique with syntax and syntax explanation. **[6]**

c) What are different Arithmetic Operations on Image? Explain Addition of Image. **[5]**

Q7) a) What are Autoencoders? **[6]**

b) What is Convolution Neural Networks (CNNs)? **[6]**

c) What is Artificial neural network for pattern Classification? **[6]**

OR

Q8) a) Explain Object Tracking in computer vision in detail. **[9]**

b) Give a brief on application of Computer Vision- Motion Estimation. **[9]**



Total No. of Questions : 8]

SEAT No. :

PB-2518

[Total No. of Pages : 2

[6263]-404

B.E. (Mechatronics Engineering)

MEDICAL MECHATRONICS

(2019 Pattern) (Semester - VII) (Elective - III) (417544 - B)

Time : 2½ Hours] *[Max. Marks : 70*

Instructions to the candidates :

1) ***Solve Q.1 or Q.2, Q.3 or Q.4, Q.5 or Q.6, Q.7 or Q.8.***
2) ***Figures to the right side indicate full marks.***
3) ***Neat diagrams must be drawn wherever necessary.***
4) ***Use of calculator is allowed.***
5) ***Assume suitable data, if necessary.***

Q1) a) State the significance of the blood flow in human body and how it affect the daily routine of human. Describe the Working Principle of Electromagnetic Blood Flow meter wit neat diagram. **[10]**

b) Define Blood Pressure? Compare Indirect (Non-Invasive) and Direct (Invasive) Blood Pressure Measurements. **[7]**

OR

Q2) a) Define Cardiac Output. Draw and Discuss the working principle of Cardiac Output with neat diagram. **[10]**

b) With the help of neat diagram, Explain the working of Oxygen Gas Analyzer with the help of neat diagram. **[7]**

Q3) a) State the role of Pacemaker in the body. With the help of neat diagram, Explain the working of Cardiac Pacemaker with the help of neat diagram. **[10]**

b) With the help of neat diagram, explain the working of Ventilators with the help of neat diagram. **[8]**

OR

P.T.O.

Q4) a) State the role of Defibrillator in the body. With the help of neat diagram, Explain the working of Defibrillator with the help of neat diagram. **[10]**

b) With the help of neat diagram, Explain the working of Hemodialysis machine with the help of neat diagram. **[8]**

Q5) a) State the advantages of X-Rays in the body. With the help of neat diagram, Explain the working of Computer Tomography with the help of neat diagram. **[10]**

b) With the help of neat diagram, Explain the working of Liquid Crystal Tomography with the help of neat diagram. **[7]**

OR

Q6) a) State the advantages of Magnetic Resonance effect in the body. With the help of neat diagram, Explain the working of Magnetic Resonance Imaging with the help of neat diagram. **[10]**

b) With the help of neat diagram, Explain the working of C T Angiography with the help of neat diagram. **[7]**

Q7) a) State the significance of Electrical Safety in the Hospitals. With the help of neat diagram, Explain the concept of EMI/RFI Interference. **[10]**

b) With the help of neat diagram, Explain the working of Biomedical Telemetry with the help of neat diagram. **[8]**

OR

Q8) a) State the role of database in HIS. With the help of neat diagram, Explain the working of HIS System with the help of neat diagram. **[10]**

b) Elaborate the working of Wireless and multi patient Telemetry with the help of neat diagram. **[8]**

▽▽▽▽

Total No. of Questions : 8]

SEAT No. :

PB2519

[Total No. of Pages : 2

[6263]-406
B.E. (Mechatronics)
PRODUCT DESIGN & DEVELOPMENT
(2019 Pattern) (Semester-VII) (417545A) (Elective-IV)

Time : 2½ Hours] *[Max. Marks : 70*

Instructions to the candidates:

1) ***Answer Q1 or Q2, Q3 or Q4, Q5 or Q6, Q7 or Q8.***
2) ***Neat diagrams must be drawn wherever necessary.***
3) ***Figures to the right indicate full marks.***

Q1) a) Explain different sources of information gathering in a concept generation process. **[9]**

b) Explain the concept of brainstorming with advantages and disadvantages. **[8]**

OR

Q2) a) Explain the Concept Generation process in Product Design with suitable example. **[9]**

b) Explain the Concept Selection process in Product Design. **[8]**

Q3) a) What is forward and reverse engineering? Discuss necessity of Product tear down. **[9]**

b) Discuss the role of Measurement and Experimentation in reverse engineering. **[9]**

OR

Q4) a) What is force flow diagram? Explain for suitable example. **[9]**

b) Explain following tools used in Benchmarking process: **[9]**

i) Intended assembly cost analysis

ii) Function Form Diagrams

iii) Trend Analysis.

P.T.O.

Q5) a) Explain the guidelines of design for manufacturing, design for assemble and design for environment in detail. **[9]**

b) Write a note on Design for Reliability. **[8]**

OR

Q6) a) Discuss design for Robustness in detail. **[8]**

b) What are the potential dangers in Product design? Discuss the guidelines to overcome these dangers. **[9]**

Q7) a) Elaborate the concept of Product lifecycle management in detail. **[9]**

b) Explain the role of customer involvement in PLM. **[9]**

OR

Q8) a) Describe the concept of product data management. **[9]**

b) Explain the phases of product lifecycle. **[9]**



Total No. of Questions : 8]

SEAT No. :

PB2520

[Total No. of Pages : 2

[6263]-408
B.E. (Mechatronics Engineering)
INDUSTRY 4.0
(2019 Pattern) (Semester-VII) (Elective-IV) (417545C)

Time : 2½ Hours] *[Max. Marks : 70*

Instructions to the candidates:

1) ***Answer Q1 or Q2, Q3 or Q4, Q5 or Q6, Q7 or Q8.***
2) ***Neat diagrams must be drawn wherever necessary.***
3) ***Figures to the right indicate full marks.***
4) ***Use of non-programmable calculator is allowed.***

Q1) a) Explain the Variable Renewable Electricity Sources. **[6]**

b) What is Electric energy storage? Explain Superconducting Magnetic Energy Storage. **[6]**

c) Explain Availability and Usability of EVs. **[6]**

OR

Q2) a) Explain V2G Capacity Estimation algorithm in detail. **[6]**

b) Discuss the potential of Sodium-Sulphur Battery Energy Storage to Enable Integration of Wind. **[6]**

c) Describe the different types of electric energy storage. **[6]**

Q3) a) What is Smart Grid? What are the benefits of Smart Grid? **[6]**

b) Explain Requirements of Self-Healing Grid. **[6]**

c) Differentiate between Conventional Grid and Smart Grid. **[5]**

OR

Q4) a) Explain the Challenges faced by Smart Grid Technology. **[6]**

b) Write a note on Demand optimization in Smart Grid. **[6]**

c) What are design challenges faced in smart grid and Industry 4.0 integration. **[5]**

P.T.O.

Q5) a) Write a note on Intellectual Property Rights (IPR). **[6]**

b) Distinguish between Automatic car and smart car. **[6]**

c) Explain the Pros and Cons of Self Driving Cars. **[6]**

OR

Q6) a) Describe the concept of Smart Monitoring. **[6]**

b) Explain the working of Self-Driving Cars. **[6]**

c) Write a note on Wi-Fi Technology? **[6]**

Q7) a) Explain with neat diagram architecture of Industrial Internet of Things. **[6]**

b) How the concept of IOT evolved? Explain. **[6]**

c) Define IIOT. State the benefits of IIOT. **[5]**

OR

Q8) a) What are General Opportunities and Challenges faced in Industry 4.0. **[6]**

b) What are the different sensors used in IoT? Explain in brief. **[6]**

c) Write a note on Raspberry Pi. **[5]**



Total No. of Questions : 8] **SEAT No. :**

PB4414 **[Total No. of Pages : 2**

[6263]-409
B.E. (Mechatronics Engineering)
INTERNET OF THINGS
(2019 Pattern) (Semester-VIII) (417548)

Time : 2½ Hours] ***[Max. Marks : 70***

Instructions to the candidates:

1) ***Solve Q.1 or Q.2, Q.3 or Q.4, Q.5 or Q.6, Q.7 or Q.8.***
2) ***Neat diagrams must be drawn wherever necessary.***
3) ***Figures to the right indicate full marks.***
4) ***Assume suitable data if necessary.***

Q1) a) Define IOT Platform. How does an IOT platform Work? **[9]**

b) State and explain different Types of platform. **[8]**

OR

Q2) a) How to Choose an IOT Platform? **[8]**

b) Explain MQTT protocol. **[9]**

Q3) a) Explain Cloud Computing Architecture and its characteristics. **[6]**

b) Explain different deployment cloud models. **[6]**

c) Explain IOT Service Models: Infrasturcture as a service. **[6]**

OR

Q4) a) Explain Big data in context of cloud computing. **[6]**

b) Explain IOT service Models: Platforms a Service. **[6]**

c) Explain IOT Data Synchronization in context with IOT. **[6]**

P.T.O.

Q5) a) Explain different security issues in IOT. **[6]**

b) Explain the use of use of IOT gateways in Security. **[5]**

c) Explain Authorization Mechanisms IoT. **[6]**

OR

Q6) a) Explain how to achieve Privacy in IoT Networks. **[5]**

b) Explain Bootstrapping and Authentication in IOT. **[6]**

c) Explain A lightweight cryptography (LWC) framework to secure IOT. **[6]**

Q7) a) Explain in detail-Smart home. **[6]**

b) Explain in detail-Smart Cities. **[6]**

c) Explain Ingestible Sensor, Digital Medicine, Mobile Apps in Health Care Sector. **[6]**

OR

Q8) a) Explain in detail-Smart Grid. **[6]**

b) Explain in detail-Smart Health Care System. **[6]**

c) Explain-Cloud and Big Data Analytics in the Heath Care Sector. **[6]**



Total No. of Questions : 8]

SEAT No. :

PB4420

[Total No. of Pages : 3

[6263]-410

B.E. (Mechatronics Engineering)

VIBRATION ANALYSIS AND CONTROL

(2019 Pattern) (Semester - VIII) (417549)

Time : 2½ Hours] *[Max. Marks : 70*

Instructions to the candidates:

1) ***Answer Q.No.1 or Q.No.2, Q.No.3 or Q.No.4, Q.No.5 or Q.No.6 and Q.No.7 or Q.No.8.***
2) ***Neat diagram must be drawn wherever necessary.***
3) ***Use of drawing instruments electronic pocket calculators are allowed.***
4) ***Figures to the right indicates full marks.***
5) ***Assume suitable data, if necessary.***

Q1) a) Define the term critical damping coefficient related to vibrations . **[7]**

b) Explain transverse vibrations with neat diagram. **[4]**

c) A mass of 2 kg is supported on a spring of 3 KN/m and has a dashpot having damping coefficient of 5Ns/m. If the initial displacement of 8mm is given, find: **[7]**

i) The damped natural frequency
ii) The logarithmic decrement
iii) The amplitude after 3 cycles

OR

Q2) a) A 500 kg vehicle is mounted on springs such that its static deflection is 1.5mm. What is the damping coefficient of viscous damper to be added to the system in parallel with the springs such that the system is critically damped? **[6]**

b) In a single degree freedom viscously damped vibrating system the suspended mass of 20kg makes 50 oscillations in 20 seconds. The amplitude of natural vibrations decreases to one fourth of the initial value after 4 oscillations. **[6]**

Determine:

i) The logarithmic decrement
ii) Damping factor
iii) Damping coefficient

c) Explain damped and undamped vibrations **[6]**

P.T.O.

Q3) a) Explain transmissibility versus frequency ratio curve for different amount of damping. **[8]**

b) Write a short note on : forced vibrations due to reciprocating unbalance. **[10]**

OR

Q4) a) Discuss the effect of shaft speed when shaft speed is less than critical speed, shaft speed is equal to critical speed, shaft speed is greater than critical speed. **[8]**

b) A radio set of 20kg mass must be isolated from a machine vibrating with an amplitude of 0.05mm at 500 cpm. The set is mounted on four isolators, each having a spring scale of 31400N/m and damping factor of 392Ns/m.

i) What is the amplitude of vibration of the radio? **[10]**

ii) What is the dynamic load on each isolator due to vibration.

Q5) a) Explain two degree of freedom system with any two practical examples. **[6]**

b) Explain degenerate system with any two examples. **[6]**

c) Define the following terms. **[5]**

i) Zero frequency

ii) Node point

OR

Q6) a) Explain the concept of torsionally equivalent shaft and derive the equation for its equivalent length. **[8]**

b) The flywheel of an engine driving a dynamo has mass of 200 kg and has a radius of gyration of 300mm. The shaft at the flywheel end has an effective length of 250mm and is 50mm diameter. The armature mass is 225 kg and has a radius of gyration of 255mm. The dynamo shaft has a diameter of 43.75mm and a length of 200mm. Neglecting the inertia of the shaft and coupling, calculate the frequency of the torsional vibrations and position of node. Take the modulus of rigidity for shaft material as 80GPa. **[9]**

Q7) a) Explain the general vibration measurement process with neat sketch. **[8]**

b) A device used to measure tensional acceleration consist of a ring having a moment of inertia of 0.049 kgm^2 connected to a shaft spring having a scale of 0.98 Nm/rad and a viscous damper having a constant of 0.11 Nm s/rad. When the shaft vibrates with a frequencdy of 15cpm, the relative amplitude between the ring and shaft is found to be 2° . What is the maximum acceleration of the shaft. **[9]**

OR

Q8) a) Explain four methods of vibration control. **[8]**

b) A vibration measuring device is used to find the displacement, velocity and acceleration of a machine running at 120 rpm. If the natural frequency of the instrument is 5 Hz and it shows 0.04 mm. What are the 3 readings? Assume no damping. **[9]**

* * *

Total No. of Questions : 8]

SEAT No. :

PB4415

[Total No. of Pages :2

[6263]-411
B.E. (Mechatronics Engineering)
APP DEVELOPMENT
(2019 Pattern) (Semester-VIII) (Elective - V) (417550A)

Time : 2½ Hours] *[Max. Marks : 70*

Instructions to the candidates:

1) ***Answer Q.1 or Q.2, Q.3 or Q.4, Q.5 or Q.6, Q.7 or Q.8.***
2) ***Neat diagram must be drawn wherever necessary.***
3) ***Figures to the right indicates full marks.***
4) ***Assume suitable data if necessary.***

Q1) a) Differentiate between Table Layout and Frame Layout. **[6]**

b) Explain the Android activity life cycle. **[6]**

c) List all attributes to develop a simple button and Write the syntax for Intenr -Filter tag. **[6]**

OR

Q2) a) Write the Syntax and output for: **[10]**

i) Toggle Button,

ii) Toast

iii) Switch button

iv) Image Button

v) Check Box

b) Explain different layout managers with its uses in Android. **[8]**

Q3) a) Describe the significance of SQLite database in android. **[6]**

b) Write a program to capture an image using a camera and display it. **[6]**

c) List sensors in Android and explain any one in detail. **[5]**

OR

P.T.O.

Q4) a) Define content provider and explain fragments. **[6]**

b) How can you create and use databases. **[6]**

c) What are the methods for converting text to speech in android. **[5]**

Q5) a) Describe types of permissions used while developing android applications. **[9]**

b) Develop a program to send an email. **[9]**

OR

Q6) a) Develop the registration form using the following GUI. **[10]**



b) Develope a simple calculator using table layout. **[8]**

Q7) a) Describe the procedure to connect our device to internet resources. **[6]**

b) Explain Web servers and Web browsers with examples. **[6]**

c) Explain HTML & its roots. **[5]**

OR

Q8) a) Explain different approaches to web application development. **[9]**

b) Explain dynamic web application and its applications. **[8]**

Total No. of Questions : 8]

SEAT No. : ____

PB4444

[6263]-413

[Total No. of Pages : 3

B.E. (Mechatronics Engineering)

ADVANCED CONTROL SYSTEMS

(2019 Pattern) (Semester- VIII) (Elective-V) (417550-C)

Time : 2½ Hours] ***[Max. Marks : 70***

Instructions to the candidates:

1) ***Solve Q.1 or Q.2, Q.3 or Q.4, Q.5 or Q.6, Q.7 or Q.8.***
2) ***Neat diagrams must be drawn wherever necessary.***
3) ***Use of Non-programmable Calculator is allowed.***
4) ***Assume suitable data if necessary.***

Q1) a) Derive the expression for the Pulse Transfer Matrix. **[8]**

b) Find the state transition matrix for the system with the state equation as,

$$x(k+1)=\begin{bmatrix} 0 & 1 \\ -0.12 & -0.2 \end{bmatrix} x(k)$$ **[9]**

OR

Q2) a) Define the following terms: **[6]**

i) State

ii) State Variable

iii) State Space

iv) State Vector

b) For the given state model find the pulse transfer function. **[11]**

$$x(k+1)=\begin{bmatrix} 0 & 0 & -0.15 \\ 0 & 1 & 0 \\ 1 & 1.3 & 0.5 \end{bmatrix} x(k)+\begin{bmatrix} 0 \\ 1 \\ 1 \end{bmatrix} u(k)$$

$$y(k)=\begin{bmatrix} 1 & 1 & 1 \end{bmatrix} x(k)$$

P.T.O.

Q3) a) Define state controllability, state observability and output controllability. **[6]**

b) Find the state controllability and state observability for the given system. **[12]**

$$x(k+1)=\begin{bmatrix} 0 & 1 \\ -24 & -8 \end{bmatrix}x(k)+\begin{bmatrix} 1 \\ 0 \end{bmatrix}u(k)$$

$$y(k)=\begin{bmatrix} 1 & 5 \end{bmatrix}x(k)$$

OR

Q4) a) Write short notes on: **[6]**

i) State Observers

ii) State Variable feedback gain matrix

b) Find the state feedback gain matrix for the system having the pole locations on -0.5 ± 0.5. **[12]**

$$x(k+1)=\begin{bmatrix} 0 & 1 \\ -20 & -9 \end{bmatrix}x(k)+\begin{bmatrix} 0 \\ 1 \end{bmatrix}u(k)$$

Q5) a) Explain the following terms: **[9]**

i) Positive definiteness

ii) Positive semi-definiteness

iii) Negative definiteness

b) Determine the stability of the equilibrium state of the following system using Lyapunov method, $x=\begin{bmatrix} 0 & 1 \\ -4 & -8 \end{bmatrix}x(t)$ **[8]**

OR

Q6) a) Explain the Lyapunov's direct and second method for stability analysis of Continuous and Discrete Time LTI systems. **[9]**

b) Determine the stability of the equilibrium state of the following system using Lyapunov method, **[8]**

$$\begin{bmatrix} x_1(k+1) \\ x_2(k+2) \end{bmatrix} = \begin{bmatrix} 0 & 1 \\ -2.5 & -5 \end{bmatrix} \begin{bmatrix} x_1(k) \\ x_2(k) \end{bmatrix}$$

Q7) a) Explain the characteristics of non-linear systems. **[9]**

b) Explain the concept of describing function and use of the describing function of ideal relay. **[9]**

OR

Q8) a) List out the common non-linearities. Explain any three. **[9]**

b) Write a short note on stability analysis using describing function. **[9]**



Total No. of Questions : 8]

SEAT No. :

PB-4486

[Total No. of Pages : 2

[6263]-415

B.E. (Mechatronics Engineering)

HUMAN MACHINE INTERFACE

(2019 Pattern) (Semester - VIII) (417551-B) (Elective - VI)

Time : 2½ Hours] *[Max. Marks : 70*

Instructions to the candidates:

1) ***Solve Q1 or Q2, Q3 or Q4, Q5 or Q6, Q7 or Q8.***
2) ***Neat diagrams must be drawn wherever necessary.***
3) ***Figures to the right side indicate full marks.***
4) ***Assume Suitable data if necessary.***

Q1) a) Explain the graphical design concepts in HMI in brief. **[9]**

b) Explain the concept of visible languages in HMI. **[8]**

OR

Q2) a) Explain the beyond screen design in HMI. **[9]**

b) Write a short note on graphical design by gride pattern. **[8]**

Q3) a) Explain in brief the window-based controls in HMI. **[8]**

b) Explain in detail the ten Plagues of the Information Age. **[9]**

OR

Q4) a) Write a short note on feedback and guidance in HMI. **[8]**

b) Explain how the communication is establish in HMI with example. **[9]**

Q5) a) Explain the strengths and limitations of HCI Standards. **[9]**

b) Explain the principles to support usability in HMI. **[9]**

OR

Q6) a) Write a short note on Human Computer Interaction (HCI) patterns in HMI. **[9]**

b) Explain the process-oriented standards in detail. **[9]**

P.T.O.

Q7) a) Explain the design of HMI for Air-conditioning system. **[9]**

b) Write a short note on HMI in process control. **[9]**

OR

Q8) a) Explain the role of HMI in robotic welding. **[9]**

b) Explain the smart phones using HMI. **[9]**

⌘⌘⌘

Total No. of Questions : 8] **SEAT No. :**

PB-4487 **[Total No. of Pages : 2**

[6263]-416

B.E. (Mechatronics Engineering)

ELECTRIC VEHICLES

(2019 Pattern) (Semester - VIII) (417551C) (Elective - VI)

Time : 2½ Hours] ***[Max. Marks : 70***

Instructions to the candidates:

1) ***Solve Q1 or Q2, Q3 or Q4, Q5 or Q6, Q7 or Q8.***
2) ***Figures to the right indicate full marks.***
3) ***Neat diagrams must be drawn wherever necessary.***
4) ***Use of non-programmable calculator is allowed.***

Q1) a) Describe Construction and Working of the Motors used in Electric Vehicles. **[6]**

b) Write Short note on Battery thermal management system. **[6]**

c) Calculate the range of two-wheeler and for how many hours power will be supplied by battery with following specifications : **[6]**
Battery Rating: 30 Ah, 48 V
Motor Power: 1.5 kW, 48 V,
Max Speed: 50 kmph at full load.
Assume Suitable data necessary

OR

Q2) a) Describe and Illustrate the BCU their types. **[6]**

b) A rickshaw has following specifications **[6]**
Gross curb weight (GCW) = 600 Kg.
Road Friction, R_r = 0.015
Coefficient of Drag, C_d = 0.45
Density of Air, ρ = 1.2 kg/m^3
Front Area of Vehicle, A = 1.6 m^2
Wheel Radius = 0.2 m
Maximum speed of the vehicle = 30 kmph
Working Voltage of Motor = 24 Volts
For attaining the speed range of 90 km per charge, suggest the type and capacity of battery pack required. Assume suitable data, if necessary.

c) Write a note on Battery Energy Storage systems. **[6]**

P.T.O.

Q3) a) Explain power flow control in electric drive-train topologies. **[6]**

b) Describe and illustrate the Dynamic equation related to mechanics of vehicle movement. **[6]**

c) Describe and illustrate Four-Wheeler Electric Vehicle Configurations. **[5]**

OR

Q4) a) Describe and Illustrate the Effect of Rolling and Pitch on velocity and movements. **[6]**

b) Describe and illustrate the brake system and its types. **[6]**

c) Differentiate between mechanical differential and electric differential. **[5]**

Q5) a) Describe and illustrate the Driving dynamics and Comfort of Car Package. **[6]**

b) What is the Homologation of Vehicles? **[6]**

c) Explain about the different National/International Testing / Regulation / Licensing / Approval Organizations and Agencies. **[6]**

OR

Q6) a) Describe and illustrate the retrofitting of Two-wheeler vehicles. **[6]**

b) State and explain the different types of frames used in electric vehicle. **[6]**

c) Describe and illustrate the body loads based on varieties of Electric Vehicle Configurations. **[6]**

Q7) a) What are the Charging Methods and the Charging Standards? **[6]**

b) Describe with neat diagram Typical Structure of Battery Management Systems (BMS). **[6]**

c) Write a note on Charging Infrastructure for Electric Vehicles - EVCI Guidelines. **[5]**

OR

Q8) a) Explain th Boost Converter for Power Factor Correction with Examples. **[6]**

b) Explain the electric vehicle chargers (Level 1, Level 2, and Level 3). **[6]**

c) Write a note on BIS Charging Standards. **[5]**

⌘⌘⌘

Total No. of Questions : 10]

SEAT No. :

PB-2521

[Total No. of Pages : 2

[6263]-417

B.E. (Civil)

HONORS IN METRO CONSTRUCTION : WORK METHOD STATEMENT MAKING

(2019 Pattern) (Semester - VII) (401301)

Time : 2½ Hours] *[Max. Marks : 70*

Instructions to the candidates:

1) ***Answers Q1 or Q2, Q3 or Q4, Q5 or Q6, Q7 or Q8, Q9 or Q10.***
2) ***Neat diagram must be drawn wherever necessary.***
3) ***Figures to the right indicate full marks.***
4) ***Your answer will be valued as a whole.***
5) ***Use electronic pocket calculator is allowed.***
6) ***Assume suitable data if necessary.***

Q1) Explain in Method Statement for Pier Protection and Kerb Median Fixing for metro projects. **[14]**

OR

Q2) Explain Method Statement for Vertical Bearing Installation in metro projects. **[14]**

Q3) Explain General Safety measures while excavation. **[14]**

OR

Q4) Explain Method statement for Open Foundation in case of metro projects. **[14]**

Q5) Role of Quality Assurance Manager in case of metro projects. **[14]**

OR

Q6) Explain in brief Method Statement for Overhead Launching Girder. **[14]**

P.T.O.

Q7) Explain in brief for Underslung Segment Launcher erection of Ground Supported Staging System. **[14]**

OR

Q8) Explain Sequence of Work for construction of Concourse Pier arm Platform Pier arm with integrated pier cap & portal beams. **[14]**

Q9) Explain in brief Method Statement for Span load test. **[14]**

OR

Q10) Write a Method Statement for Load Testing of Launching Girder. **[14]**

⌘⌘⌘

Total No. of Questions : 8]

SEAT No. :

PB-2522

[Total No. of Pages : 2

[6263]-418

B.E.(Civil Engineering)

HONORS IN "ARCHITECTURE AND TOWN PLANNING"

Traffic and Transportation Planning

(2019 Pattern) (Semester - VII) (401401)

Time : 2½ Hours] *[Max. Marks : 70*

Instructions to the candidates:

1) ***Answer Q.1 or Q.2, Q.3 or Q.4, Q.5 or Q.6 and Q.7 or Q.8.***
2) ***Figures to the right indicates full marks.***
3) ***Neat diagrams must be drawn wherever necessary.***
4) ***Assume suitable data if necessary.***
5) ***Use of non-programmable scientific calculator is allowed.***

Q1) a) Describe in detail the Stopping Sight Distance with formula. **[6]**

b) Explain the design considerations for cycle tracks in India. **[6]**

c) Write a note on "Hierarchy of road in India" **[5]**

OR

Q2) a) Explain the parking norms and standards mentioned in National Building Code 2016. **[6]**

b) Describe in detail the Overtaking Sight Distance with formula. **[6]**

c) Explain the norms for Carriageway, Width and Footpath in India. **[5]**

Q3) a) What is freight terminal? Write down its function. **[6]**

b) Draw the neat sketch of rotary intersection and show all the design elements in it. Also explain any two design elements of it. **[8]**

c) Write down the functions of passenger terminals. **[3]**

OR

Q4) a) Enlist the various types of grade separated intersections and explain any one with figure. **[7]**

b) Draw a neat sketch of a fully clover leaf intersection and mark all the traffic movements. Discuss the advantages and disadvantages of it. **[6]**

c) What is the aim to provide road safety information to road users? Also enlist the various activities conducted by Government of India for road safety. **[4]**

P.T.O

Q5) a) Write a note on urban spatial structure and its influence on transport linkages. **[6]**

b) Explain the Lowry Model for land use. **[6]**

c) Write a note on: Bombay Road Plan. **[6]**

OR

Q6) a) Write a note on : Lucknow Road Plan. **[6]**

b) Explain the Lowry Gairn Model for land use. **[6]**

c) Write a note on : Nagpur Road Plan. **[6]**

Q7) a) What is Sustainable Urban Transportation? Explain the need of Sustainable Urban Transportation. **[6]**

b) Elaborate BRTS. **[6]**

c) Write a note on "Transportation System Management". **[6]**

OR

Q8) a) Explain the concept MRTS in India. **[6]**

b) Describe the Urban Transport Problems in India. **[6]**

c) Which data is required to plan the city bus transportation in urban area? **[6]**



Total No. of Questions : 8]

SEAT No. : ____

PB-2523

[Total No. of Pages : 2

[6263]-419
BE (Mechanical) (3D Printing Honors)
Additive Manufacturing System Design
(2019 Pattern) (Semester - VII) (402014MJ)

Time : 2½ Hours] ***[Max. Marks : 70***

Instructions to the candidates:

1) ***Draw suitable neat diagrams, whenever necessary.***
2) ***Figure to the right indicate full marks.***
3) ***Assume suitable data if required.***

Q1) a) What is Plasma Atomization explain in details with it's Benefits. **[8]**

b) Define Atomization and explain any one type with neat sketch. **[10]**

OR

Q2) a) Explain Plasma Rotating Electrode Process with schematic diagram. **[8]**

b) Write a short note on **[10]**

i) Electrolysis

ii) Carbonyl Reactions

Q3) a) Explain types of Powder delivery nozzles. **[7]**

b) Explain:

i) Inert gas cooling system

ii) Gas recirculating system **[10]**

OR

P.T.O.

Q4) a) What is the relation of warpage of print and bed heating? **[7]**

b) Explain the design and structure of nozzle with Nozzle movement system. **[10]**

Q5) a) Write a short note on steps of Calibrating 3D printer with a laser pointer. **[10]**

b) Differentiate between: Single printing and Multi-printing mode. **[8]**

OR

Q6) a) Explain steps of calibration : **[10]**

1) Calibrate the extruder

2) Calibrate your 3D Printer axes.

b) Explain determination the correct temperature of filament? **[8]**

Q7) a) Explain Quality inspection system in Additive manufacturing system. **[10]**

b) What are the different types of Sensors used in 3D Printer? **[7]**

OR

Q8) a) Explain faults and trouble shooting in 3D Printing system? **[10]**

b) Explain different ASM/ASTM Standards for Additive Manufacturing system. **[7]**

Total No. of Questions : 8]

SEAT No. :

PB2524

[Total No. of Pages :2

[6263]-420
B.E. (Mechanical) (Honors)
402024 MJ : ELECTRICAL ENERGY SYSTEMS
(2019 Pattern) (Semester-VII)

Time : 2½ Hours] *[Max. Marks : 70*

Instructions to the candidates:

1) ***Attempt Q.1 or Q.2, Q.3 or Q.4, Q.5 or Q.6 and Q.7 or Q.8.***
2) ***Neat diagrams must be drawn wherever necessary.***
3) ***Figures to the right indicate full marks.***
4) ***Assume suitable data wherever necessary and mention the same clearly.***

Q1) a) Explain the procedure for quantification of compressed air leakages. **[10]**

b) Explain Positive Displacement Compressor and Dynamic compressor with examples and schematic diagrams. **[8]**

OR

Q2) a) Explain compressed air system with its components and their functions. **[10]**

b) Discuss parameters for efficient operation of compressed air system. **[8]**

Q3) a) Discuss following air-conditioning process with hand drawn psychometric chart **[10]**

i) Cooling with dehudification

ii) Heating with humidification

b) Explain the working of Li-Br vapour absorption system with a neat sketch? **[7]**

OR

Q4) a) Discuss following psychometric terms. **[10]**

i) Specific humidity

ii) Relative humidity

iii) WBT

iv) Degree of saturation

v) Enthalpy of air

b) Discuss the function of cooling tower. Explain different performance parameters of cooling tower. **[7]**

P.T.O.

Q5) a) What are types of fans? Explain working of axial fan with schematic diagram. **[10]**

b) Explain Municipal water pumping system. **[8]**

OR

Q6) a) Discuss energy saving opportunities in a fans and blowers. **[10]**

b) Discuss the parameters affecting pump system curves. **[8]**

Q7) a) What is a lamp? Explain the principle of operation and features of Fluorescent tube lamp (FTL). **[10]**

b) Discuss energy conservation measures possible in lighting system. **[7]**

OR

Q8) a) Explain the principal of operation and features of LED Lamps. **[10]**

b) Discuss the factors that need to be considered for DG set selection. **[7]**

Total No. of Questions : 8]

SEAT No. :

PB-4749

[Total No. of Pages : 2

[6263]-421

B.E. (Mechanical / Automobile)

HONORS IN MODELLING AND SIMULATION OF EHV

(2019 Pattern) (Semester - VII) (302034MJ)

Time : 2½ Hours] *[Max. Marks : 70*

Instructions to the candidates:

1) ***Solve Q1 or Q2, Q3 or Q4, Q5 or Q6, Q7 or Q8.***
2) ***Figures to the right indicate full marks.***
3) ***Draw the neat sketch wherever necessary.***

Q1) a) Explain A Motor Control Unit in electric vehicle with its functional features. **[4]**

b) Explain the following concepts related to modes of BMS control. **[8]**

i) Centralized BMS Architecture

ii) Modular BMS Topology

iii) Primary/Subordinate BMS

iv) Distributed BMS Architecture

c) What is Battery/Cell Control System in EV? Explain with its functions and working principal? **[8]**

OR

Q2) a) Explain Torque and speed coupling in electric vehicle. **[4]**

b) Explain following motor Control methods (any four) : **[8]**

i) Phase flux linkage

ii) Phase Inductance

iii) Modulated Signal Injection

iv) Mutually Induced Voltage

v) Observer based Theory

c) Explain the importance of Sensor Management and Integration for electric vehicle with functional and application point of view. **[8]**

P.T.O.

Q3) a) Explain, "Placement of Motors" in electric vehicle system. **[8]**

b) Explain the important feature of following (any four) : **[8]**

i) Unicycle

ii) Bicycle

iii) Dicycle

iv) Tricycle

v) Qudracycle

OR

Q4) a) Explain, "Batter and Motion Transmission Systems" in electric vehicle system. **[8]**

b) Explain Propulsion and Power distribution system in electric vehicle with its main components. **[8]**

Q5) a) Explain Design and repair tips for frame of vehicles. **[8]**

b) Explain the types and components of battery pack in electric vehicle. **[8]**

OR

Q6) a) Explain the types of chassis on basis of following : **[8]**

i) Engine Location

ii) Assembly

iii) Frame

b) Explain the following parameters related to vehicle dynamics in detail. **[8]**

i) Aerodynamic drag

ii) Aerodynamic lift

iii) Side force

iv) Roiling movement

Q7) a) List out the feature of Electric Vehicle Dashboard considering suitable example of 2W/3W/4W. **[10]**

b) What do you mean by ergonomics and aesthetics aspects of ev? Explain in detail with important features? **[8]**

OR

Q8) a) Explain Noise Factors & Failure Modes in electric vehicle. **[10]**

b) Explain the important features of FMEA analysis in electric vehicle. **[8]**

⌘⌘⌘

Total No. of Questions : 8]

SEAT No. :

PB-4750

[Total No. of Pages : 2

[6263]-422
T.E. (Mechanical Engineering)
Honors in Systems Engineering
System Modelling and Simulation
(2019 Pattern) (Semester - VII) (302044)

Time : 2½ Hours] ***[Max. Marks : 70***

Instructions to the candidates:

1) ***Solve Q.1 or Q.2, Q.3 or Q.4, Q.5 or Q.6 and Q.7 or Q.8.***
2) ***Assume suitable data, if necessary.***
3) ***Neat diagrams must be drawn wherever necessary.***
4) ***Figures to the right indicates full marks.***

Q1) a) Explain the significance of basic bond graph elements in system modeling. **[9]**

b) Describe the characteristics and functions of basic 1-port elements in bond graph theory. Provide examples. **[9]**

OR

Q2) a) Conduct a comparative analysis of bond graph modeling versus other system modeling approaches. Highlight the strengths and weaknesses. **[9]**

b) Illustrate how bond graph elements and causality considerations are applied in a real-world engineering problem. **[9]**

Q3) a) Describe the modeling of mechanical systems using Newton's second law and provide an example involving a mass-spring-damper system. **[9]**

b) Explain the use of free body diagrams in the analysis of mechanical systems. **[8]**

OR

Q4) a) Explain the concept of acoustic impedance and its role in modeling acoustic systems. **[8]**

b) Compare the modeling approaches for electrical and mechanical systems. Highlighting the similarities and differences. **[9]**

P.T.O

Q5) a) Explain the concept of system formulation in the context of dynamic system modeling. Why is it essential for accurate simulation? **[9]**

b) Discuss the process and importance of model reduction in dynamic system analysis. Provide an example to illustrate your points. **[9]**

OR

Q6) a) Describe a case study where model reduction significantly improved the efficiency of a system simulation without compromising accuracy. **[9]**

b) Illustrate the application of nonlinear and automated simulation techniques in a modern engineering problem, such as renewable energy systems or autonomous vehicles. **[9]**

Q7) a) What makes nonlinearities important in real-world systems, and how do they influence system performance and stability? **[8]**

b) What is the role of automated simulation in dynamic system modeling and how does it improve the modeling process? **[9]**

OR

Q8) a) What does the free response of a linear system refer to and how are eigenvalues related to system stability? Provide an example to illustrate this relationship. **[8]**

b) How is the characteristic equation method used to solve ordinary differential equations (ODEs)? Provide an example of solving a second-order linear ODE. **[9]**



Total No. of Questions : 8]

SEAT No. :

PB2525

[Total No. of Pages :2

[6263]-423
B.E. (E & TC) (Honors in Robotics)
INDUSTRIAL ROBOTICS AND AUTOMATION
(2019 Pattern) (Semester-VII) (404181 HR)

Time : 2½ Hours] *[Max. Marks : 70*

Instructions to the candidates:

1) ***Attempt Q.1 or Q.2, Q.3 or Q.4, Q.5 or Q.6 and Q.7 or Q.8.***
2) ***Neat diagrams must be drawn wherever necessary.***
3) ***Figures to the right indicate full marks.***
4) ***Use of Calculator is allowed.***
5) ***Assume suitable data, wherever necessary.***

Q1) a) Draw and explain single acting and double acting cylindrical actuators with proper operation. **[6]**

b) List different methods to control pneumatic control system. What is Karnaugh - Veitch mapping. **[6]**

c) List advantages and disadvantages of pneumatic system. **[6]**

OR

Q2) a) Draw different types of valves symbols and explain any one with the example. **[6]**

b) Enlist the basic components in pneumatic system and explain them in detail. **[6]**

c) What is pneumatic system? List the industrial applications of it and elaborate any one. **[6]**

Q3) a) Write the steps to design of parts for high speed feeding and orienting. State different feeding difficulties. **[9]**

b) Explain in detail how high speed automation insertion is possible in robotic assembly. State general rules for product design and automation. **[8]**

OR

Q4) a) How to perform the analysis of an assembly. Explain with one example.**[9]**

b) State design features of CNC systems. Explain drive system for CNC machine tools. **[8]**

P.T.O.

Q5) a) Write a case study on engine management system. **[6]**

b) State and explain different stages in designing a mechatronics system. **[6]**

c) Write a case study on Pick and Place robot. **[6]**

OR

Q6) a) How mechatronics system design is different than traditional system? **[6]**

b) Give the classification of a mechatronics system. **[6]**

c) Define Mechatronics. Explain different key elements of the Mechatronics system. **[6]**

Q7) a) With a suitable diagram and PLC ladder diagram explain how to control two cylinders? **[9]**

b) With an example explain the calculations for power and velocity during extension and retraction. **[8]**

OR

Q8) a) Classify the pumps. Give characterics tics and selection criteria for pumps. **[9]**

b) Classify the control valves used in hydraulic system. Explain pressure control valves in detail with its functions. **[8]**

Total No. of Questions : 8]

SEAT No. :

PB2526

[Total No. of Pages :2

[6263]-424

B.E. (Honors) (Blockchain Technology)
(Electronics & Telecommunication)
SMART CONTRACTS & CRYPTOCURRENCY
(2019 Pattern) (Semester-VII) (404181 HBCT)

Time : 2½ Hours] *[Max. Marks : 70*

Instructions to the candidates:

1) ***Solve Q.1 or Q.2, Q.3 or Q.4, Q.5 or Q.6 and Q.7 or Q.8.***
2) ***Figures to the right indicate full marks.***
3) ***Assume suitable data, wherever necessary.***
4) ***Draw Neat diagrams wherever necessary.***
5) ***Use of scientific calculator is allowed.***

Q1) a) Explain what is Distributed Ledger and its type. **[6]**

b) List and explain Bitcoin protocols in detail. **[6]**

c) Explain Namecoin in detail. **[6]**

OR

Q2) a) Explain the detailed Working of smart contract. **[6]**

b) Explain Sidechain in detail. **[6]**

c) Define Etherium and discuss various constructing components of Etherium. **[6]**

Q3) a) Explain Black Market and Global Economy in detail. **[6]**

b) List and explain different domain name services available for blockchain cryptocurrencies. **[6]**

c) Discuss applications of cryptocurrency for IoT. **[5]**

OR

Q4) a) List and explain different applications of Internet of Things. **[6]**

b) Discuss use of blockchain technology in medical record management system. **[6]**

c) Explain the Legal Aspects-Crypto currency exchange. **[5]**

P.T.O.

Q5) a) Explain following terms with example. **[6]**

i) Digital signature

ii) Digital Keys

iii) Private Keys

iv) Public Keys

v) Bitcoins Wallets

iv) Bitcoins Addresses

b) List and Explain Different type of Bitcoin APIs. **[6]**

c) Explain what is bitcoin and Its working in detail. **[6]**

OR

Q6) a) Explain how bitcoin transaction works in detail. **[5]**

b) List and explain types of bitcoin wallets. **[8]**

c) Explain the term digital signature and its uses. **[5]**

Q7) a) Discuss the future of AI and blockchain. **[6]**

b) Discuss different investment management platforms of blockchain in detail. **[6]**

c) Discuss Use cases for blockchain and AI together in various domains. **[5]**

OR

Q8) a) Discuss IBM Block chain in detail. **[6]**

b) Discuss any one issue where AI and blockchain work together to solve real world problem. **[6]**

c) Discuss Block chain use cases in Healthcare. **[5]**

Total No. of Questions : 8]

SEAT No. :

PB2527

[Total No. of Pages :2

[6263]-425

B.E. (Printing Technology) (Honors)

ADVANCED PACKAGING TECHNOLOGY

Sustainable Packaging

(2019 Pattern) (Semester-VII) (408214)

Time : 2½ Hours] *[Max. Marks : 70*

Instructions to the candidates:

1) ***Attempt Q.1 or Q.2, Q.3 or Q.4, Q.5 or Q.6 and Q.7 or Q.8.***
2) ***Figures to the right indicate full marks.***
3) ***Assume suitable data, if necessary.***
4) ***Neat diagrams must be drawn wherever necessary.***

Q1) a) What are design packaging considerations? **[10]**

b) What is supply chain management. **[7]**

OR

Q2) a) Explain in details compostable packaging. **[10]**

b) What is sustainable food packaging. **[7]**

Q3) a) What is the Need and functions of LCA. **[9]**

b) Explain 3R's of Circular Economy. **[9]**

OR

Q4) a) What is Life Cycle Analyses? **[9]**

b) What are the Key concepts and Terminology of circular economy. **[9]**

Q5) What are the Phases and Processes of LCA. **[17]**

OR

P.T.O.

Q6) a) Which Life Cycle Assessment Tools are used in packaging industry. **[10]**

b) Explain Carbon Footprint Assessment. **[7]**

Q7) a) Which ISO standards are used in sustainable packaging industry. **[9]**

b) Explain the concept of Marketing and Communicating. **[9]**

OR

Q8) a) Explain the Environmental Claim for sustainable packaging. **[9]**

b) Explain why Understanding and Engagement with Stakeholders is required for marketing strategy. **[9]**

Total No. of Questions : 8]

SEAT No. :

PB2528

[Total No. of Pages :2

[6263]-426

B.E. (Honors) (Artificial Intelligence and Machine Learning) (Computer Engineering)

MACHINE LEARNING

(2019 Pattern) (Semester-VII) (410301)

Time : 2½ Hours] *[Max. Marks : 70*

Instructions to the candidates:

1) ***Answer Q.1 or Q.2, Q.3 or Q.4, Q.5 or Q.6 and Q.7 or Q.8.***
2) ***Figures to the right indicate full marks.***
3) ***Neat diagrams must be drawn wherever necessary.***
4) ***Make suitable assumption whenever necessary.***

Q1) a) What is curse of dimensionality? Explain SVM in detail. **[8]**

b) Write note on regression and kernels. **[9]**

OR

Q2) a) Explain Random Forest and overfitting in detail. **[8]**

b) Write note on adaptive Nearest Neighbour. **[9]**

Q3) a) Explain Learning Boolean Function in detail. **[9]**

b) Explain two class & multiclass discrimination. **[9]**

OR

Q4) a) What is Learning Time & Recurrent Network? Explain in detail. **[9]**

b) Explain Bayesian Neural Network in detail with the help of example. **[9]**

Q5) a) What is association rule mining? Explain the Aprion algorithm with help of example. **[8]**

b) Explain the proximity matrices in detail. **[9]**

OR

P.T.O.

Q6) a) Explain the following: **[8]**

i) K-medoids

ii) Hierarchical clustering

b) Explain the self -organizing maps in detail. **[9]**

Q7) a) Explain in detail the discrete markov process in detail. **[9]**

b) Explain in detail the Hidden Markov model in detail. **[9]**

OR

Q8) a) What are different graphical models? Explain any two in detail. **[9]**

b) What is belief propagation? Explain Chains, trees, Olytrees, Junction Trees. **[9]**

Total No. of Questions : 8]

SEAT No. :

PB2529

[Total No. of Pages :2

[6263]-427

B.E. (Computer) (Honors in Cyber Security)

INTERNET OF THINGS AND EMBEDDED SECURITY

(2019 Pattern) (Semester-VII) (410401)

Time : 2½ Hours] *[Max. Marks : 70*

Instructions to the candidates:

1) ***Attempt Q.1 or Q.2, Q.3 or Q.4, Q.5 or Q.6 and Q.7 or Q.8.***
2) ***Figures to the right indicate full marks.***
3) ***Neat diagrams must be drawn wherever necessary.***
4) ***Assume suitable data, if necessary.***

Q1) a) Explain in detail IoT security life cycle? **[9]**

b) Explain Data archiving and records management? **[8]**

OR

Q2) a) Explain the following **[8]**

i) Incident management

ii) Compliance monitoring

b) Explain the concept of secure device disposal and zerozation. **[9]**

Q3) a) Enlist and explain Cryptographic module principles. **[9]**

b) Enlist and explain the phases of cryptographic key management fundamentals. **[9]**

OR

Q4) a) Cryptographic key management fundamentals? **[9]**

b) What is Digital signature? Explain the steps involved in creating a Digital signature? **[9]**

P.T.O.

Q5) a) Explain holistic Identify, Access, and Management program for IoT? **[8]**

b) Describe naming conventions & Uniqueness requirements in IoT? **[9]**

OR

Q6) a) Explain account monitoring & control for IoT? **[8]**

b) Explain identify management & access management for the IoT? **[9]**

Q7) a) Explain the following identify management model **[9]**

i) Local Identity

ii) Federated identity

b) Explain Identity portrayal for IoT? **[9]**

OR

Q8) a) Explain user-centric identity management. **[9]**

b) Explain following **[9]**

i) Network Identity

ii) Global web identity

Total No. of Questions : 8]

SEAT No. :

PB2530

[Total No. of Pages :2

[6263]-428

B.E. (Computer Engineering) (Honors in Data Science)
MACHINE LEARNING AND DATA SCIENCE
(2019 Pattern) (Semester-VII) (410501)

Time : 2½ Hours] *[Max. Marks : 70*

Instructions to the candidates:

1) ***Attempt Q.1 or Q.2, Q.3 or Q.4, Q.5 or Q.6 and Q.7 or Q.8.***
2) ***Figures to the right indicate full marks.***
3) ***Neat diagrams must be drawn wherever necessary.***
4) ***Assume suitable data, if necessary.***

Q1) a) Explain various types of Hierarchical Clustering. **[6]**

b) Cluster the following dataset using Agglomerative Hierarchical clustering technique- **[6]**

	X1	X2
A	185	72
B	170	56
C	168	60
D	179	68
E	182	72
F	188	77

Also show intermediate steps.

c) What do you mean by unsupervised learning? Explain in detail. **[6]**

OR

Q2) a) How to measure the quality of clustering? Explain any three measures. **[6]**

b) What are different types of partitional clustering? Explain any two of them. **[6]**

c) What do you mean by Density-Based Spatial Clustering? Explain in detail. **[6]**

Q3) a) Explain a biological neuron along with its parts. **[4]**

b) What are the types of artificial neural network? **[6]**

c) Explain Generalized Delta Learning Rule. **[7]**

OR

P.T.O.

Q4) a) What are the limitations of MLP? **[4]**

b) Explain the process of training a perceptron. **[6]**

c) How does the learning rate affect the training of the Neural Network? What do you mean by Hyperparameters? **[7]**

Q5) a) Illustrate Gradient descent optimization using an example. **[6]**

b) Explain Recursive Neural Network. **[6]**

c) What are the different types of filters used in CNNs? **[6]**

OR

Q6) a) Does the size of the feature map always reduce upon applying the filters? Explain why or why not. **[6]**

b) Explain CNN architecture along with diagram. **[6]**

c) Explain Recursive Neural Network. **[6]**

Q7) a) Write short note on document representation. **[6]**

b) Illustrate tokenization with an example. **[6]**

c) What are the practical uses of feature extraction? **[5]**

OR

Q8) a) Write short note on - **[6]**

i) Stemming

ii) Lemmatization

b) What are various text similarity measures? Explain any two of them. **[6]**

c) What do you mean by topic modelling? Explain Latent Dirichlet Allocation. **[5]**

Total No. of Questions : 8]

SEAT No. :

PB2531

[Total No. of Pages :2

[6263]-429

B.E. (Computer Engineering) (Honors in IoT)
MACHINE LEARNING FOR INTERNET OF THINGS
(2019 Pattern) (Semester-VII) (410601)

Time : 2½ Hours] *[Max. Marks : 70*

Instructions to the candidates:

1) ***Attempt Q.1 or Q.2, Q.3 or Q.4, Q.5 or Q.6 and Q.7 or Q.8.***
2) ***Neat diagrams must be drawn wherever necessary.***
3) ***Figures to the right indicate full marks.***
4) ***Assume suitable data, if necessary.***

Q1) a) Explain CNN with any one application. **[6]**

b) Explain Random forest algorithm with working. **[6]**

c) What are the steps to apply PCA in computer vision? **[6]**

OR

Q2) Write short note on following **[18]**

a) Recurrent Neural Network

b) Principle Component Analysis

c) Decision Trees

Q3) a) Explain Hardware implementation of Least-Squares Solvers for Shallow Neural Network. **[6]**

b) What is the need Machine learning accelerators? List and explain different ML accelerators. **[6]**

c) What is edge computing on IoT devices? What are the benifits of it. **[5]**

OR

Q4) a) What is Edge Computing? Why are edge devices essential for IoT? **[6]**

b) Explain Machine Learning Accelerator with an example. **[6]**

c) Explain the concept of Hardware Implementation in Machine Learning. **[5]**

P.T.O.

Q5) a) How deep learning is used in IoT? Explain with example. **[6]**

b) What is embedded deep learning? Explain in brief with benefits of it. **[6]**

c) Explain various deep learning models for sensor data. **[6]**

OR

Q6) a) Explain any one application for deep learning for sensor data. **[9]**

b) For Pre - training the network which deep learning architecture can be used? Why? **[9]**

Q7) a) How IoT is useful in Agriculture? Explain with example. **[6]**

b) Enlist applications of IoT. Explain any two applications in detail. **[6]**

c) How machine learning is useful in IoT security? Explain with example. **[5]**

OR

Q8) a) What is Remote Patient Monitoring? Explain with example. **[9]**

b) Explain in detail Smart Transportation System. **[8]**

Total No. of Questions : 8]

SEAT No. :

PB2532

[Total No. of Pages :2

[6263]-430

B.E. (Computer Engineering) (Honors in V & AR)
VIRTUAL REALITY IN GAME DEVELOPMENT
(2019 Pattern) (Semester-VII) (410701)

Time : 2½ Hours] *[Max. Marks : 70*

Instructions to the candidates:

1) ***Attempt Q.1 or Q.2, Q.3 or Q.4, Q.5 or Q.6 and Q.7 or Q.8.***
2) ***Neat diagrams must be drawn wherever necessary.***
3) ***Figures to the right indicate full marks.***
4) ***Assume suitable data, if necessary.***

Q1) a) Explain in detail Task analysis of Make stage. **[9]**

b) Explain different guidelines of Iterative Design. **[8]**

OR

Q2) a) What is the importance of iterative design? Explain with the help of VR game. **[9]**

b) Explain in detail the various stages of iterative design. **[8]**

Q3) a) What is Batching and differentiate between Static Batching and Dynamic Batching. **[9]**

b) Explin the roles of inspector, project and hierarchy panels in the Unity editor. Which is responsible for referencing the content that will be included in the build process. **[9]**

OR

Q4) a) List out some best practices for Unity 3D. **[9]**

b) Mention important components of Unity 3D. Explain what is Prefabs in Unity 3D? **[9]**

P.T.O.

Q5) a) Illustrate the overall design process of the Battle System in Uinty. **[9]**

b) Consider the Following Code snippet Below: **[8]**

```
Class Mover : Monobehaviour

{

Vector3 Target;

Float Speed;

Void Update()

{

}

}
```

Finish This Code So The Gameobject Cintaining This Script Moves With Constant Speed Towards Target, And Stop Moving Once It Reaches 1.0, Or Less, Units Of Distance?

OR

Q6) a) Illustrate the process to build the shop scene in Unity. **[9]**

b) Explain why time. Deltatime should be used to make things that depend on time operate correctly? **[8]**

Q7) a) List design guidelines to reduce Motion Sickness. **[9]**

b) Illustrate physical issues involved with use of VR equipment. **[9]**

OR

Q8) a) Explain adverse health effects caused by Non-moving visual stimuli. **[9]**

b) Explain Sensory conflict Theory of motion sickness. **[9]**

Total No. of Questions : 8]

SEAT No. :

PB-2533

[Total No. of Pages : 2

[6263]-431

B.E. (Honors/Minors)

TUNNEL ENGINEERING

(2019 Pattern) (Semester - VIII) (401303)

Time : 2½ Hours] *[Max. Marks : 70*

Instructions to the candidates:

1) ***Answer Q1 or Q2, Q3 or Q4, Q5 or Q6, Q7 or Q8***
2) ***Figures to the right indicate full marks.***
3) ***Draw neat figures wherever necessary.***
4) ***Assume suitable data if necessary.***

Q1) a) Write about controlled blasting techniques. **[6]**

b) Explain the advantages of shield tunneling. **[6]**

c) Explain the factors affecting selection of a shield. **[6]**

OR

Q2) a) Write about benefits and drawbacks of a TBM drive in contrast to traditional tunneling methods. **[6]**

b) Explain about earth pressure balance shield method in tunneling. **[6]**

c) Explain the lowering of TBM which includes assembling & dismantling. **[6]**

Q3) a) Write about sources of heat in underground space. **[6]**

b) Explain about use of Potentiometric displacement sensor in tunneling. **[6]**

c) Explain about use of Wireless tilt meter in tunneling. **[5]**

OR

Q4) a) Write about physiological effects of heat and humidity. **[6]**

b) Explain about sampling and analysis of air in tunnel. **[6]**

c) Explain about gas chromatography in tunneling. **[5]**

P.T.O.

Q5) a) Explain advantages of shield tunneling. **[6]**

b) Explain about roof and wall supports in tunneling. **[6]**

c) Explain the smooth blasting techniques of tunneling. **[6]**

OR

Q6) a) Write about automation in drilling. **[6]**

b) Explain the cushion blasting techniques of tunneling. **[6]**

c) Explain about problems of drilling and blasting for large tunnels. **[6]**

Q7) a) Write about hazard identification & risk assessment (HIRA). **[6]**

b) Explain about planning for safety for optimization of productivity. **[6]**

c) Explain in detail about evolution of modern safety concepts. **[5]**

OR

Q8) a) Explain about hazards of Oxygen-deficient atmospheres. **[6]**

b) Explain safety audit methodology. **[6]**

c) Explain about job safety analysis. **[5]**

⌘⌘⌘

Total No. of Questions : 8]

SEAT No. :

PB-2534

[Total No. of Pages : 2

[6263]-432

B.E. (Honors & Minors)

LAND USE AND LAND COVER

(2019 Pattern) (Semester - VIII) (401403)

Time : 2½ Hours] *[Max. Marks : 70*

Instructions to the candidates:

1) ***Answer Q1 or Q2, Q3 or Q4, Q5 or Q6, Q7 or Q8.***
2) ***Neat diagrams must be drawn wherever necessary.***
3) ***Figures to the right side indicate full marks.***
4) ***Assume Suitable data if necessary.***

Q1) a) Enlist and explain the importance of the surveys carried out in urban planning and state the analysis of the socio economic survey. **[9]**

b) Explain the land use planning of Residential Zone, Industrial, Public and Semipublic zone. **[9]**

OR

Q2) a) State the importance and application of GIS and RS in Land Use and Land Cover. **[9]**

b) Explain the Land use classification for Regional Planning as per UDPFI guidelines. **[9]**

Q3) a) Discuss a Smart city model of our country in view to the issues encountered and the planning approaches **[8]**

b) Explain Eco-sensitive areas and Socio economic sensitive areas with examples. **[9]**

OR

Q4) a) Discuss in brief with the help of examples features of green cities and sustainable cities **[8]**

b) What is land use classification? Give its importance of zoning in land classification? **[9]**

P.T.O.

Q5) a) What is UDCPR? Explain the UDCPR guidelines for land planning. **[9]**

b) What is Development Plan? Mention the steps involved and the expected outcomes of development Plan. **[9]**

OR

Q6) a) Discuss in detail the Role of URDPFI in planning. **[9]**

b) Write a detailed note on T P schemes with a mention of a case study details. **[9]**

Q7) a) State the Objectives & principles of urban planning. Enlist the Different Land use planning norms **[9]**

b) Explain different planning approaches dealt with Neighborhood with suitable example **[8]**

OR

Q8) a) Explain in detail the Environmental aspects of land use planning. **[9]**

b) Write short note on **[8]**

i) National Land utilization policy

ii) Maharashtra land revenue code 1966

⌘⌘⌘

Total No. of Questions : 8] **SEAT No. :**

PB2535 **[Total No. of Pages : 2**

[6263]-433

B.E. (Automobile and Mechanical Engineering) (Honors)
3D PRINTING APPLICATIONS AND ENTREPRENEURSHIP
(2019 Pattern) (Semester - VIII) (402016 MJ)

Time : 2½ Hours] ***[Max. Marks : 70***

Instructions to the candidates:

1) ***Solve Q.1 or Q.2, Q.3 or Q.4, Q.5 or Q.6, Q.7 or Q.8.***
2) ***Neat diagrams must be drawn wherever necessary.***
3) ***Figures to the right side indicate full marks.***
4) ***Assume suitable data if necessary and state them in your answer cleary.***
5) ***Use non-programmble pocket size electronic calculator is allowed.***

Q1) a) What are Functional, Manufacturing and Commercial requirements of Helath-Care, Personalized Surgey & Biomedical Applications? **[9]**

b) What are functional, Manufacturing and Commercial requirements of prosthetics, Orthotics, Deontic? **[8]**

OR

Q2) a) What are Advantages, Disadvantages, Limitations and Challenges of additive manufacturing technologies of bio printing in Biomedical and Health-Care Applications? **[9]**

b) Give examples of applications of 3D printing in medical field like Bio printing Surgical tools, Tissues and Organs. **[8]**

Q3) a) Explain additive manufacturing fabrication of various types of materials. Give advantages, Disadvantages to managing additive manufacturing operations in consumer goods industry. **[9]**

b) What is Functional, Manufacturing and Commercial requirements of Consumer Product Applications? **[9]**

OR

Q4) a) Give examples of 3D printing applications in Consumer Products field like Eye wares, sporting goods, Footware, Home and office utilities. **[9]**

b) What is principle of Social Manufacturing and give examples of 3D printing applications in Home and Office utilities, Lighting Utilities? **[9]**

P.T.O.

Q5) a) What are Advantages, Disadvantages, Limitations and challenges of additive manufacturing in creative Art Expressions? **[9]**

b) Give short note on Lost Wax casting & mold making. **[8]**

OR

Q6) a) What are the applications of 3D printing in Art, History Archeology, Architecture and Landscaping field like Home utilities. **[9]**

b) Give short note on Casting and Rubber molding patterns, Wax 3D printing solutions. **[8]**

Q7) a) Explain with examples. **[9]**

i) Design for Modularity (DFMo)

ii) Design for Manufacturing and Assembly (DFMA)

iii) Product Development process

b) What is Rapid Prototyping Process & Explain it's evaluation based on Quality, Quantity, Accuracy? **[9]**

OR

Q8) a) Compare Manufacturer-centric & Consumer-Centric Business models. Explain current approach of Manufacturing Enterprises. **[9]**

b) What are the Digiproneurship Research and Development priorities for additive manufacturing? **[9]**



Total No. of Questions : 8]

SEAT No. : ____

PB2536

[Total No. of Pages : 2

[6263]-434

B.E. (Mechanical)(Honors)

ENERGY MANAGEMENT IN UTILITY SYSTEMS

Sustainable Energy Conversion Systems

(2019 Pattern) (Semester - VIII) (402026 MJ)

Time : 2½ Hours] ***[Max. Marks : 70***

Instructions to the candidates:

1) ***Answer Q.1 or Q.2, Q.3 or Q.4, Q.5 or Q.6 and Q.7 or Q.8.***
2) ***Neat diagrams must be drawn wherever necessary.***
3) ***Figures to the right indicate full marks.***
4) ***Use of electronic pocket calculator is allowed.***
5) ***Assume suitable data, if necessary.***

Q1) a) Define Hybrid wind energy system? Explain any one. **[5]**

b) Difference between Vertical Axis turbine and Horizontal Axis turbine. **[6]**

c) Short note on **[6]**

i) Stall Control

ii) Pitch Control

iii) Offshore wind power

OR

Q2) a) Define Wind Energy? Explain its Parameters. **[5]**

b) Difference between Up Wind and Down Wind Process. **[6]**

c) Explain Wind + Diesel power energy systems. **[6]**

Q3) a) Short note on Biochemical Conversion. **[5]**

b) With a neat sketch, explain Community biogas plants. **[6]**

c) What is Gasification? Types of gasifiers, Explain any one. **[7]**

OR

P.T.O.

Q4) a) Write the Environment benefits of biochemical and thermo-chemical conversion. **[5]**

b) Write down any Five Utilization and advantages of briquetting. **[6]**

c) Explain the term Industrial waste and Agro residues. **[7]**

Q5) a) Briefly explain Techno Commercial Analysis. **[5]**

b) Difference Between Conventional and Nonconventional Energy system. **[6]**

c) Short note on Need and importance of Energy storage. **[6]**

OR

Q6) a) Explain with example of Nonconventional Energy System. **[5]**

b) What are the Various forms of Energy Storage? Explain any one. **[6]**

c) Explain any three variables Conventional Energy System. **[6]**

Q7) a) Write a short note on Electronic ballast. **[5]**

b) Explain the variables of Automatic power factor controllers. **[6]**

c) Short note on **[7]**

i) Occupancy sensors

ii) Energy efficient lighting controls

OR

Q8) a) Write a short note on controllers? **[5]**

b) Define IOT? Explain the challenges of IOT Development. **[6]**

c) Write short note on Soft starters with energy saver. **[7]**

Total No. of Questions : 8]

SEAT No. :

PB-4751

[Total No. of Pages : 2

[6263]-435R

B.E. (Mechanical) (Honors)

e-VEHICLE STANDARDS, CHARGING AND SAFETY

(2019 Pattern) (Semester - VIII) (302036MJ)

Time : 2½ Hours] *[Max. Marks : 70*

Instructions to the candidates:

1) ***Solve Q1 or Q2, Q3 or Q4, Q5 or Q6, Q7 or Q8.***
2) ***Neat diagrams must be drawn wherever necessary.***
3) ***Figures to the right indicate full marks.***
4) ***Use of Calculator is allowed.***
5) ***Assume suitable data if necessary.***

Q1) a) Describe Control architecture in EV charging. **[9]**

b) Describe EV integration in the power grid. What is the role of aggregator in EV? **[8]**

OR

Q2) a) Explain in detail Autonomous electric vehicles with advantages and applications. **[9]**

b) Explain with neat sketch Electric Vehicle Battery Charging. **[8]**

Q3) a) Explain Constant current discharge and static capacity test. **[9]**

b) State and explain various Testing procedures for EV batteries. **[9]**

OR

Q4) a) What are electrical and mechanical test procedures for safety requirements of traction batteries? **[9]**

b) Explain specific Requirements for L and M Category Electric Power Train Vehicles. **[9]**

P.T.O.

Q5) a) Explain the importance of thermal management systems in ensuring the safe operation of lithium-ion batteries in electric vehicles. **[9]**

b) Elaborate the concept of "Battery Pack and Module Safety". **[8]**

OR

Q6) a) Write a note on : **[9]**

i) Calorimetry

ii) Electrochemical and Thermal Characterization of batteries

b) Explain the role of regulatory standards and industry guidelines in ensuring the safety. **[8]**

Q7) a) Differentiate between domestic and public charging infrastructure, highlighting their respective features and functionalities. **[9]**

b) Explain the concept of Battery Swapping with its types, advantages and disadvantages. **[9]**

OR

Q8) a) Explain the concept of multi-stakeholder governance in the context of EV charging infrastructure and its importance for effective management. **[9]**

b) Explain planning steps of location planning and land allocation for EV charging infrastructure. **[9]**

Total No. of Questions : 8]

SEAT No. :

PB2538

[Total No. of Pages : 2

[6263]-436

B.E. (Mechanical Engg.) (Honors)

SYSTEMS ENGINEERING MANAGEMENT

(2019 Pattern) (Semester - VIII) (302046 MJ)

Time : 2½ Hours] *[Max. Marks : 70*

Instructions to the candidates:

1) ***Answer Q.1 or Q.2, Q.3 or Q.4, Q.5 or Q.6 and Q.7 or Q.8.***
2) ***Neat diagrams must be drawn wherever necessary.***
3) ***Figures to the right side indicate full marks.***
4) ***Use of Calculator is allowed.***
5) ***Assume Suitable data if necessary.***

Q1) a) What is plan risk management? **[6]**

b) Explain information management process in brief. **[6]**

c) What is a risk management activity? **[4]**

OR

Q2) a) Explain with one of the example information management activities? **[6]**

b) Explain the term "risk analysis". **[6]**

c) What are the steps of risk profile? **[4]**

Q3) a) Why is configuration status accounting important? **[6]**

b) What are the major activities that make up configuration management? **[6]**

c) What are the activities in the evaluating stage of project management? **[6]**

OR

Q4) a) Why do we perform configuration identification? **[6]**

b) What are the common components of configuration management system? **[6]**

c) What is the configuration status accounting process? **[6]**

P.T.O.

Q5) a) What are the activities about modelling? **[6]**

b) How do you measure project performance? **[6]**

c) What are the ways to measure progress of activities in a project? **[6]**

OR

Q6) a) What is the measurement plan in project development process? **[6]**

b) What are the measurements for a model application? **[6]**

c) Explain the importance of project management measurement? **[6]**

Q7) a) What is threat and incident management? **[6]**

b) Explain the process to maintain records and reports in project management? **[6]**

c) Why is quality assurance important? **[6]**

OR

Q8) a) What is the quality assurance system in engineering? **[6]**

b) What are the principles of quality assurance? **[6]**

c) Explain the' evaluation of an activity? **[6]**

Total No. of Questions : 8]

SEAT No. :

PB2539

[Total No. of Pages : 2

[6263]-437

B.E. (Electronics & Telecommunication)/(Honors in Robotics)

ARTIFICIAL INTELLIGENCE IN ROBOTICS

(2019 Pattern) (Semester - VIII) (404183 HR)

Time : 2½ Hours] *[Max. Marks : 70*

Instructions to the candidates:

1) ***Answer Q.1 or Q.2, Q.3 or Q.4, Q.5 or Q.6 and Q.7 or Q.8.***
2) ***Neat diagrams must be drawn wherever necessary.***
3) ***Figures to the right indicate full marks.***
4) ***Assume Suitable data if necessary.***

Q1) a) Explain Hill climbing algorithm. Explain Local maxima, Global Maxima and Plateau. **[8]**

b) Differentiate between uninformed and informed search methods. **[5]**

c) One aspect of a simulated annealing cooling schedule is the temperature. How do you decide on a suitable starting temperature? **[5]**

OR

Q2) a) Describe the Tabu search algorithm. Justify, Tabu search cannot guarantee the optimal result. **[8]**

b) What is the difference between heuristic and metaheuristic? **[5]**

c) Why are real-coded genetic algorithms necessary? **[5]**

Q3) a) Describe the Canny edge detection technique with the application. **[7]**

b) What is imaging-based automatic sorting? **[5]**

c) Explain two object recognition techniques used in industries. **[5]**

OR

P.T.O.

Q4) a) Explain the segmentation methods used in the vision system with a suitable example. **[7]**

b) Enlist the applications of a machine vision system and explain any one application of machine vision system in manufacturing. **[5]**

c) What is imaging based automatic inspection? **[5]**

Q5) a) What are the applications of intelligent systems for mobile Robot Motion Planning? **[8]**

b) Explain path planning robot control in dynamic environments. **[5]**

c) Explain any one application of intelligent robot. **[5]**

OR

Q6) a) What is Task based Hybrid Closure Grasping Optimization for Autonomous Robot Arm, explain with example. **[8]**

b) How intelligent robot maintain accurate motion. **[5]**

c) Enlist advantages and limitations of intelligent robot. **[5]**

Q7) a) Explain route optimization for AS/RS systems. **[7]**

b) Comment on how robotics can be used to design intelligent vehicles. **[5]**

c) How real time scheduling is done using AI. **[5]**

OR

Q8) a) Explain the role of artificial intelligence in flexible automation. **[7]**

b) Comment on the fundamental problem in robotics. **[5]**

c) Explain the process of resolution with a proper example. **[5]**



Total No. of Questions : 8]

SEAT No. :

PB2540

[Total No. of Pages : 2

[6263]-438

B.E. (E & TC) (Honors)

BLOCKCHAIN SOLUTIONS

(2019 Pattern) (Semester - VIII) (404183 HBCT)

Time : 2½ Hours] *[Max. Marks : 70*

Instructions to the candidates:

1) ***Answer Q.1 or Q.2, Q.3 or Q.4, Q.5 or Q.6 and Q.7 or Q.8.***
2) ***Neat diagrams must be drawn wherever necessary.***
3) ***Figures to the right indicate full marks.***
4) ***Use of calculator is allowed.***
5) ***Assume suitable data, if necessary.***

Q1) a) Which blockchain is used for smart contracts? Explain the roll of smart contract in blockchain. **[6]**

b) What is directed acyclic graph in Blockchain technology. Explain in detail. **[6]**

c) Describe the process of ethereum development with 90. **[6]**

OR

Q2) a) What are puzzles in blockchain? How mining is related to blockchain. Describe in detail. **[6]**

b) What is algorand? How it works. **[6]**

c) What is the process of smart contract in blockchain. **[6]**

Q3) a) Compare Z_{cash} & Z_k - SNARKS in blockchain attacks. **[6]**

b) What is pseudo anonymity? How it helps bitcoin? **[6]**

c) Explain : selfish mining & 51% attacks in Blockchain. **[6]**

OR

Q4) a) Explain : Sybil attack in detail. **[6]**

b) Brief about sharding based consensus algorithm for prevention of attacks in blockchain. **[6]**

c) Compare the pseudo - anonymity & anonymity. **[6]**

P.T.O.

Q5) a) Describe blockchain technology as the platform of healthcare system. **[6]**

b) Describe the use of blockchain technology in the implementation of scheme by Government. **[6]**

c) How blockchain can offer security in financial transactions. **[6]**

OR

Q6) a) Explain the implementation of healthcare record measurement with IoT & blockchain technology. **[6]**

b) Describe use of blockchain by government to cut down fraud & increase the transperancy. **[6]**

c) Short Note : Blockchain in security. **[6]**

Q7) a) Discuss the limitations of blockchain in Education sector. **[6]**

b) Compare myths & reality of blockchain with proper example. **[6]**

c) What are the flaws of blockchain technology, explain in detail. **[4]**

OR

Q8) a) Describe any three myths Vs Reality cases of Blockchain technology. **[6]**

b) Describe the myth “Blockchain & Bitcoin are same”. **[4]**

c) Justify “Business needs Blockchain” Myth or reality. **[6]**



Total No. of Questions : 8]

SEAT No. :

PB-4745

[Total No. of Pages : 2

[6263]-439

B.E. (Printing Engineering)

(Honors) BRAND AND PACKAGING MANAGEMENT

(2019 Pattern) (Semester - VIII) (408216)

Time : 2½ Hours] *[Max. Marks : 70*

Instructions to the candidates:

1) ***Solve Q1 or Q2, Q3 or Q4, Q5 or Q6, Q7 or Q8.***
2) ***Figures to the right indicate full marks.***
3) ***Assume suitable data, if necessary.***
4) ***Neat diagrams must be drawn wherever necessary.***
5) ***Use of electronic pocket calculator is allowed.***

Q1) a) Define what a visual language is and explain its significance in branding and communication. **[8]**

b) Discuss the importance of understanding the brand identity before creating a visual language. Provide examples to support your answer. **[9]**

OR

Q2) a) Evaluate the impact of digital platforms and technological advancements on visual language design in contemporary branding. Discuss the opportunities presented by these developments. **[9]**

b) Reflect on the ethical considerations involved in visual language design for brands. How can designers ensure that their visual communication aligns with ethical principles and avoids potential controversies? **[8]**

Q3) a) Evaluate the importance of conducting a competitor analysis in the context of packaging design. **[9]**

b) Describe the typical deliverables expected in a packaging design project. Include tangible items like design mockups. prototypes and production-ready files, as well as any documentation or reports. **[9]**

OR

Q4) a) Assess the potential consequences of neglecting to define the scope of a packaging design project thoroughly. Discuss how unclear project scopes can lead to miscommunication, scope creep and ultimately, project delays and dissatisfaction. **[9]**

P.T.O.

b) Explain the significance of setting clear deadlines in a packaging design brief. Discuss how deadlines help manage project timelines, facilitate communication and ensure timely delivery of deliverables. **[9]**

Q5) a) Explain the significance of empathy in the design thinking process and its impact on the creation of successful products or services. **[9]**

b) Describe the various methods used to gather insights and empathize with consumers' needs, highlighting their advantages and limitations. **[8]**

OR

Q6) a) Discuss the ideation stage. How can designers facilitate a brainstorming session to generate innovative ideas. **[9]**

b) Discuss the importance of encouraging creativity during the Ideation stage. How can designers facilitate a brainstorming session to generate innovative ideas. **[8]**

Q7) a) Explain the role of sustainability in the effectiveness of packaging design in today's consumer landscape. **[9]**

b) Discuss how digital technologies, such as augmented reality or QR codes, be integrated into packaging to enhance its impact, relevance, advantage and persuasive quality. **[9]**

OR

Q8) a) Discuss the key elements that make a product's packaging relevant to its target audience, provide example of successful brand message or points-of-difference communicated through packaging. **[9]**

b) Discuss role of emotional appeal in making a product's packaging more engaging and persuasive. **[9]**

Total No. of Questions : 8]

SEAT No. : [ ]

PB2541

[Total No. of Pages : 2

[6263]-440

B.E. (Honours) (Artificial Intelligence and Machine)

SOFT COMPUTING AND DEEP LEARNING

(2019 Pattern) (Semester - VIII) (410303)

Time : 2½ Hours] ***[Max. Marks : 70***

Instructions to the candidates:

1) ***Answer Q.1 or Q.2, Q.3 or Q.4, Q.5 or Q.6 and Q.7 or Q.8.***
2) ***Neat diagrams must be drawn wherever necessary.***
3) ***Figures to the right indicate full marks.***

Q1) a) Elaborate Roulette Wheel's Selection algorithm in Genetic Algorithm. **[6]**

b) Describe Genetic Algorithm Requirements. **[6]**

c) What is Mutation in Genetic Algorithm? Explain with examples. **[6]**

OR

Q2) a) Distinguish in between Symbolic AI and Genetic Algorithms. **[6]**

b) Write note on Evolving Neural Networks with example. **[6]**

c) List the applications of Genetic Algorithms with explanation of one use case. **[6]**

Q3) a) Compare Biological Neural Network (BNN) with Artificial Neural Network (ANN). **[5]**

b) Describe the architecture of artificial neural network (ANN). **[6]**

c) Explain the process of Modeling a Neuron. **[6]**

OR

Q4) a) Draw and explain General Architecture of McCulloch-Pitts Neuron. **[6]**

b) Write detailed note on Multi-Layer Perceptron. **[5]**

c) Compare Perceptron vs. Gradient Descent Rule. **[6]**

P.T.O.

Q5) a) Explain the working principle of Convolution Neural Network (CNN) with suitable diagram. **[6]**

b) Describe the Long-Short Term Memory (LSTM) algorithm with appropriate diagram. **[6]**

c) Write detailed note on Recurrent Neural Network (RNN). **[6]**

OR

Q6) a) Explain the role of classification in deep learning. **[6]**

b) Elaborate the use case of Deep Learning. **[6]**

c) Describe the working principle of Binary Classifier in Neural Networks. **[6]**

Q7) a) Write note on Vanishing Gradient in Deep Learning. **[6]**

b) Explain ReLU (Rectified Linear Unit) Activation Function. **[5]**

c) Describe Saturating Gradient Problem with example. **[6]**

OR

Q8) a) Write note on importance of the Pooling Layer in CNN. **[5]**

b) List the applications of Deep Learning and explain any one application in details. **[6]**

c) Explain the working principle of Deep Learning. **[6]**



Total No. of Questions : 8]

SEAT No. : [ ]

PB2542

[Total No. of Pages : 2

[6263]-441

B.E. (Computer) (Honors in Cyber Security)

INFORMATION SYSTEM MANAGEMENT

(2019 Pattern) (Semester - VIII) (410403)

Time : 2½ Hours] ***[Max. Marks : 70***

Instructions to the candidates:

1) ***Answer Q.1 or Q.2, Q.3 or Q.4, Q.5 or Q.6 and Q.7 or Q.8.***
2) ***Neat diagrams must be drawn wherever necessary.***
3) ***Draw neat figures wherever necessary.***
4) ***Figures to the right indicate full marks.***
5) ***Use of Calculator is allowed.***
6) ***Assume Suitable data if necessary.***

Q1) a) What is IT infrastructure explain its component? **[6]**

b) Write short note on: **[6]**

i) Internet platform

ii) Operating System platform

c) What is different enterprise application? Explain its importance. **[6]**

OR

Q2) a) What are the major types of knowledge management systems explain in brief? **[9]**

b) What is business intelligence and how it works? **[9]**

Q3) a) What is mobile digital platform? **[7]**

b) Explain BYOD in detail. Is we have different BYOD policies for staff that have different responsibilities. Justify your answer. **[6]**

c) Explain difference between Grid computing & clouding computing. **[4]**

OR

P.T.O.

Q4) a) Write short note on: **[6]**

i) Knowledge management System

ii) Business intelligence environment

b) Explain decision making process with its type **[6]**

c) Explain need of collaboration tools in business **[5]**

Q5) a) Explain Business Process Redesign (BPR). **[6]**

b) What is the purpose of system development life cycle? **[6]**

c) How to write an effective project objective explain with example. **[6]**

OR

Q6) a) Elaborate elements of information security. **[9]**

b) Write short note on **[9]**

i) Mobile Security

ii) Levels of Physical Security

Q7) a) Write down different steps of information system planning with business planning. **[6]**

b) What are cost-avoidance benefits in information system development? **[6]**

c) Define risk control tool & techniques. **[5]**

OR

Q8) a) Explain different tools for information security. **[6]**

b) Difference between Block Chain & Bitcoin. **[6]**

c) What is backup how it works. **[5]**



Total No. of Questions : 8]

SEAT No. :

PB2543

[Total No. of Pages : 2

[6263]-442

B.E. (Computer Engineering) (Honours in Data Science)

ARTIFICIAL INTELLIGENCE FOR BIG DATA ANALYTICS

(2019 Pattern) (Semester -VIII) (410503)

Time : 2½ Hours] *[Max. Marks : 70*

Instructions to the candidates:

1) ***Answer Q.1 or Q.2, Q.3 or Q.4, Q.5 or Q.6 and Q.7 or Q.8.***
2) ***Neat diagrams must be drawn wherever necessary.***
3) ***Figures to the right indicate full marks.***
4) ***Assume suitable data, if necessary.***

Q1) a) What are the components of a feed forward neural network? Explain with the help of neat sketch. **[6]**

b) Difference between linear and nonlinear neural networks? **[6]**

c) What is Recurrent neural network? Explain in detail. **[8]**

OR

Q2) a) Explain Gradient descent algorithm that is used to train the neural networks. **[6]**

b) Explain fundamental of neural networks in big data. **[6]**

c) How the backpropagation algorithm works? Explain with suitable example. **[8]**

Q3) a) Explain YARN : Yet Another Resource Negotiator. **[4]**

b) Explain HDFS (Hadoop Distributed File System) with the help of neat sketch. **[6]**

c) What is Apache Spark? Explain how it overcomes the problem of Speed of computation. **[8]**

OR

Q4) a) Explain Apache Hadoop ecosystem with suitable diagram. **[4]**

b) Explain Spark : In-Memory data processing. **[6]**

c) Explain Map/Reduce functionality of Hadoop. How it is use for data aggregation. **[8]**

P.T.O.

Q5) a) Explain the following : **[6]**

i) Data Integration

ii) Data Transformation methods

b) What are the different key characteristics of a Data Warehouse? **[6]**

c) What is Hive Big Data and its Benefits? **[4]**

OR

Q6) a) Explain in detail Data mining functionalities? **[6]**

b) Explain Scalable Machine Learning on Big Data using Spark. **[6]**

c) Write a short note on : Data warehousing. **[4]**

Q7) a) List and explain the applications of NLP. **[6]**

b) What is object detection? Explain any one application where in object detection is performed. **[6]**

c) Explain Feature Extraction Techniques in NLP. **[4]**

OR

Q8) a) What is sentiment analysis Explain with application in detail. **[6]**

b) Explain the applications of computer vision. **[6]**

c) What is the objective of Natural Language Processing? **[4]**



Total No. of Questions : 8]

SEAT No. : ____

PB-4746

[Total No. of Pages : 2

[6263]-443

B.E. (Computer Engineering)

INTERNET OF THINGS SECURITY

(2019 Pattern) (Semester - VIII) (410603) (Honours Course)

Time : 2½ Hours] ***[Max. Marks : 70***

Instructions to the candidates:

1) ***Answer Q1 or Q2, Q3 or Q4, Q5 or Q6, Q7 or Q8.***
2) ***Neat diagrams must be drawn wherever necessary.***
3) ***Figures to the right side indicate full marks.***
4) ***Assume Suitable data if necessary.***

Q1) a) Explain - Encryption in Digital Signature with example. **[6]**

b) Which are - Existing Security Schemes for IoT? Explain with example. **[6]**

c) Explain- Which security mechanisms can be used in IoT applications? **[6]**

OR

Q2) a) Explain - Identity-Based Authentication with example. **[6]**

b) What is Public-Key-Based Authentication? Explain with example. **[6]**

c) Explain - Security Goals in IoT. **[6]**

Q3) a) Explain - IoT Security for machine learning applications. **[6]**

b) What is Threat? Explain - Threats Caused in Maintenance of IoT. **[6]**

c) Which are the security requirements in - Application-Interface layer? **[5]**

OR

Q4) a) Explain - Cross-Layer Threats. **[6]**

b) Which are the security requirements in - Network layer? **[6]**

c) Which are the security requirements in - Service layer? **[5]**

P.T.O.

Q5) a) Explain - Security Protocols and Privacy Issues into 6 LoWPAN Stack. **[6]**

b) Explain - Security in Integration of Wireless Sensor Network and RFID. **[6]**

c) Explain with example - Security concerns in Social IoT. **[6]**

OR

Q6) a) Explain - Security in Identification and Tracking Technologies. **[6]**

b) Explain - Security in Communications, with example. **[6]**

c) How to provide - Confidentiality and Security for IoT Based healthcare? **[6]**

Q7) a) What is Smart City? How the security can be provided in Smart Cities? **[6]**

b) What is connected Car? How to provide security to Connected Car? **[6]**

c) Explain - How Blockchain Technology can be used for providing security and privacy in IoT. **[5]**

OR

Q8) a) What are the - Challenges Associated with secure IoT Deployment and Blockchain in IoT? **[6]**

b) Explain - The IoT and Secure Orchestration Opportunities in Cities. **[6]**

c) Explain - The IoT and Secure Automation Opportunities for Connected Cars. **[5]**

⌘⌘⌘

Total No. of Questions : 8]

SEAT No. : [ ]

PB2544

[Total No. of Pages : 2

[6263]-444

B.E. (Computer Engineering)(Honors in VR &AR)

APPLICATION DEVELOPMENT USING AUGMENTED REALITY AND VIRTUAL REALITY

(2019 Pattern) (Semester - VIII) (410703)

Time : 2½ Hours] ***[Max. Marks : 70***

Instructions to the candidates:

1) ***Answer Q.1 or Q.2, Q.3 or Q.4, Q.5 or Q.6 and Q.7 or Q.8.***
2) ***Neat diagrams must be drawn wherever necessary.***
3) ***Make suitable assumptions if necessary.***
4) ***Figures to the right indicate full marks.***

Q1) a) What is ARore? Explain the features of ARCore. **[6]**

b) Explain: SLAM algorithm. **[6]**

c) Write a note on AR tool kit. **[5]**

OR

Q2) a) Write difference between Environmental Detection and Occlusion. **[6]**

b) Explain anatomy of SLAM algorithm. **[6]**

c) What is Vuforia? Explain the features of Vuforia. **[5]**

Q3) a) What programming languages are commonly used for AR and VR development, what are the strengths and weaknesses of each of them? **[6]**

b) Write syntax used for defining **[6]**

i) Classes

ii) Functions

c) Discuss the importance of User experience in AR and VR application, and how programming languages can be used to enhance UX. **[6]**

OR

P.T.O.

Q4) a) Explain the role of unreal engine in AR and VR development. **[6]**

b) What are some of the most popular technologies offer for AR and VR development? **[6]**

c) Explain features of C# for AR and VR comfortable. **[6]**

Q5) a) What is HTC Vive? Explain the Working of HTC vive. **[5]**

b) Explain the terms: **[6]**

i) Tracking system

ii) Monitoring system

c) Explain: The contrast of hardware requirements for developing AR and VR applications. **[6]**

OR

Q6) a) Explain different types of AR systems. **[4]**

b) What are the important components of AR system. **[6]**

c) Explain Advantages and Disadvantages of AR and VR system. **[7]**

Q7) a) What are some trending application areas in AR and VR applications? **[6]**

b) Explain the role of aerospace and defense in AR and VR. **[6]**

c) What are some of the key areas of growth in AR and VR, and how are these trends likely to shape the future of the industry? **[6]**

OR

Q8) a) Evaluate the potential for AR and VR for healthcare applications. **[6]**

b) Discuss the impact of AR and VR on entertainment industry. **[6]**

c) Discuss the potential impact of AR and VR in education and learning. **[6]**



Total No. of Questions : 10]

SEAT No. :

PB4929

[Total No. of Pages : 2

[6263]-601
B.E. (Mechanical)
REFRIGERATION AND AIR CONDITIONING
(2015 Pattern) (Semester -VII) (302049)

Time :2½ Hours] *[Max. Marks :70*

Instructions to the candidates:

1) ***Answer Q.1or Q.2, Q.3 or Q.4, Q.5 or Q.6, Q.7 or Q.8, Q.9 or Q.10.***
2) ***Draw Neat diagrams whenever necessary.***
3) ***Use of scientific calculator, psychrometric chart is allowed.***
4) ***Assume suitable data if necessary.***
5) ***Figures to the right indicate full marks.***

Q1) a) With a neat sketch explain the working of cold storage. **[4]**

b) Explain how refrigerants are designated. Give sutiable example. **[6]**

OR

Q2) a) Explain Vapour compression cycle with P - h and T - s diagram. **[4]**

b) A simple saturated vapour compression refrigeration system has a condensing temperature of 50°C and evaporating temperature of 0°C. The refrigeration capacity is 7 TR. The liquid leaving the condenser is saturated liquid and compression is isentropic. Determine:

i) The mass of refrigerant in Kg/s.

ii) Compressor power in kw.

iii) Heat rejected from the system and

iv) COP of the system.

Take enthalpy at the end of isentropic compression as 210 kJ/kg & Properties of Refrigerant is listed in the following table: **[6]**

T°C	Pbar	h_f kJ/kg	h_g kJ/kg	s_{fg} kJ/kgK	s_{fg} kJ/kgk
50	12.199	84.868	206.298	0.3034	0.6792
0	3.086	36.022	187.397	0.1418	0.6960

Q3) a) Write the equations of Carnot COP, Theoretical COP, Actual COP & Relative COP. **[4]**

b) Explain cascade refrigeration system. **[6]**

OR

Q4) a) Explain Multi evaporator vapour compression refrigeration system. **[4]**

b) Explain Multi evaporator refrigeration system. **[6]**

P.T.O.

Q5) a) Explain the ASHRAE comfort chart showing the comfort zone for winter and summer season. **[6]**

b) Explain the significance of various psychometric processes by drawing it on psychomotor chart. **[10]**

OR

Q6) a) Define RSHF, GSHF, & ESHF. Explain the procedure to draw the lines of RSHF, GSHF, & ESHF. **[6]**

b) Explain different methods of duct design. [**10]**

Q7) a) Explain the working of Automatic Expansion Valve with a neat sketch.**[8]**

b) Draw a neat diagram of air-conditioning system required for winter season. Explain the working of different components in the circuit. **[8]**

OR

Q8) a) Explain the working of Thermostatic Expansion Valve with a neat sketch. **[8]**

b) Explain the concept of All - Air System with neat sketch. Also state the application of same. **[8]**

Q9) a) Explain the concept of Humidity and Smoke sensors. **[8]**

b) What are the different pressure losses in the duct. Explain. **10]**

OR

Q10)a) Classify the ducts on the basis of pressure and velocity of air in the duct. Also state any four factors which should be considered during design of duct. **[8]**

b) Classify fans used in air conditioning system. Explain any one fan in detail. **[10]**

Total No. of Questions : 8] **SEAT No. :**

PB4930 **[Total No. of Pages : 3**

[6263]-602
B.E. (Mechanical Engineering)
HYDRAULICS AND PNEUMATICS
(2015 Pattern) (Semester - VII) (402041)

Time : 2½ Hours] ***[Max. Marks : 70***

Instructions to the candidates:

1) ***Answer Q.1 'OR' Q.2, Q.3 'OR' Q.4, Q.5 'OR' Q.6, Q.7 'OR' Q.8.***
2) ***Figures to the right indicate full marks.***
3) ***Use of non-programmable scientific calculator is allowed.***
4) ***Assume data wherever necessary and mention it.***
5) ***Draw neat and suitable figure wherever necessary.***
6) ***Use of steam table is permitted.***

Q1) a) List various types of hydraulic fluids. Discuss petroleum based fluids and fire resistant fluids. **[4]**

b) Explain with a neat sketch the construction and working of a typical hydraulic cylinder. **[8]**

c) Explain the importance of various center positions of a directional control valve. **[8]**

OR

Q2) a) Compare characteristics and application of hydraulic and pneumatic drives. **[4]**

b) Draw a neat sketch of typical 4 port 3 position pilot operated directional control valve. Explain its working. **[6]**

c) Explain the working of a gear type motor and vane type motors. **[10]**

Q3) a) Explain with neat sketch pressure dependent sequencing circuit. **[8]**

b) What is regenerative circuit? Explain with neat sketch. **[8]**

OR

Q4) a) Explain with neat sketch hydraulic circuit for clamping component on drilling machine. **[8]**

b) What is bypass filter; state its merits and demerits. Also state filter materials. **[8]**

P.T.O.

Q5) a) Draw neat sketch of a typical 3 port 2 position directional control valve used in pneumatic control circuit. Explain its working in short. **[9]**

b) Explain with neat sketch working of quick exhaust value with a typical application. **[8]**

OR

Q6) a) Sketch a typical 5 way 2 position pilot operated directional control valve used in pneumatic circuit. **[8]**

b) What are the advantages of pneumatic systems over hydraulic system? **[4]**

c) What is a purpose of providing FRL unit in pneumatic systems? **[5]**

Q7) a) A hydraulic cylinder has to move a table of weight 13kN. Speed of the cylinder is to be accelerated up to a velocity of 0.13m/s in 0.5 seconds and brought to stop within a distance of 0.02m. Assume coefficient of sliding friction as 0.15 and cylinder bore diameter as 50mm. Calculate the surge pressure. **[10]**

b) Analyze the circuit shown in Fig 7 (b). **[7]**

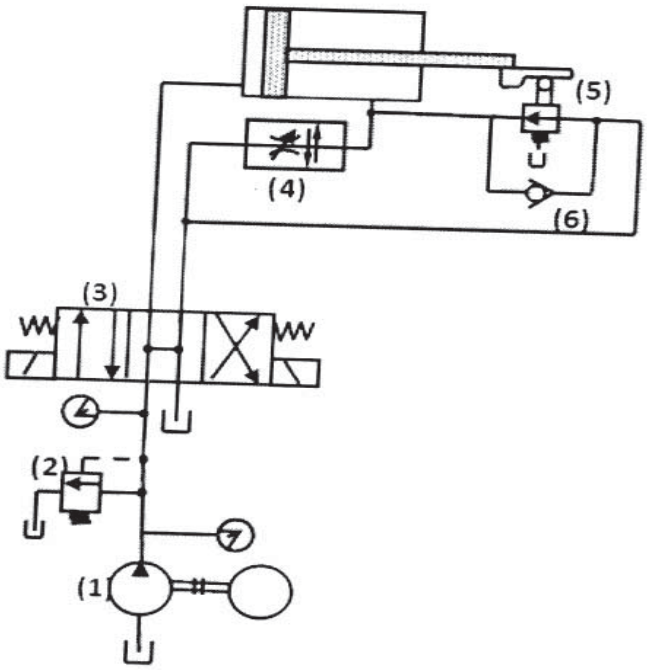

Fig. 7 (b)

OR

Q8) a) A Press cylinder has to exert a force to lift the crosshead and tooling. The cylinder is rigidly fixed by a front flange and the load is pivoted and fully guided. Maximum thrust from the press is 20kN with a stroke of 1.7m. Determine the suitable cylinder. The system working pressure should not exceed 250 bar. **[10]**

b) Analyze the circuit shown in Fig 8 (b) **[7]**

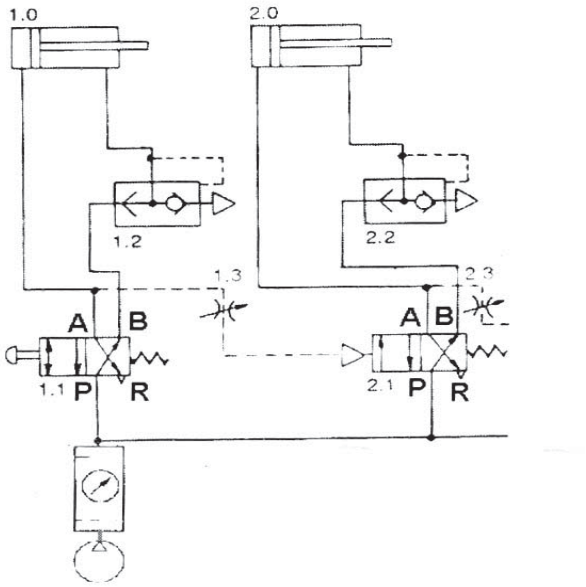

Fig. 8 (b)

❋ ❋ ❋

Total No. of Questions : 10]

SEAT No. : ____

PB-4931

[Total No. of Pages : 4

[6263]-603

B.E. (Mechanical)

FINITE ELEMENT ANALYSIS

(2015 Pattern) (Semester - VII) (402044A)

Time : 2½ Hours] ***[Max. Marks : 70***

Instructions to the candidates:

1) ***Draw suitable neat diagram, wherever necessary.***
2) ***Figures to the right indicate full marks.***
3) ***Use of electronic pocket calculator is allowed.***
4) ***Assume suitable data, if required.***

Q1) a) Write a note on weighted residual method **[6]**

b) Explain elimination approach used in FEA to handle homogeneous and non homogeneous Boundary conditions. **[4]**

OR

Q2) a) Write a note on Rayleigh-Ritz method for element formulation and its advantages over other element formulation methods. **[6]**

b) The nodal coordinates of triangular element are as shown in figure 1. The x coordinate of interior point P is 3.2 and shape function $N_1 = 0.42$. Determine N_2, N_3 and Y coordinate of P. **[4]**

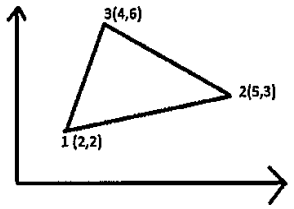

Figure 1.

P.T.O

Q3) An axial load of 200kN is applied at 20° C to the rod, as shown in figure 2. The temperature is then raised to 60° C. The material for element 1 is aluminium and for element 2 is steel. The relative properties for element 1 and 2 are as bellow. **[10]**

Determine:

a) Nodal Displacement

b) Support Reactions

c) Element stress

Property	**Element 1**	**Element 2**
Material	Aluminium	Steel
Modulus of Elesticity	70×10^9 N/m^2	200×10^9 N/m^2
Cross - section Arrea	2400 mm^2	600 mm^2
Coefficient of thermal expansion	2.3×10^{-6}/ °C	11.7×10^{-6}/°C

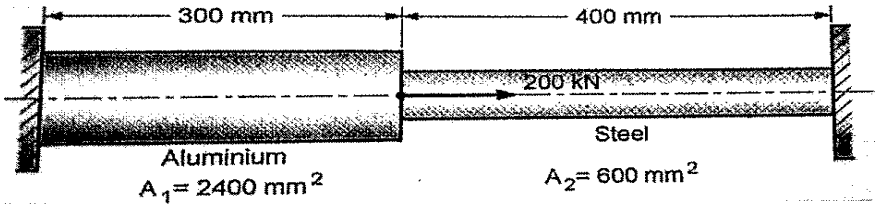

Figure 2

OR

Q4) a) Write a short note on **[6]**

i) Convergence requirements.

ii) Geometric Isotropy

b) List name of different elements which can be use for plane stress/strain problems. Explain anyone in detail. **[4]**

Q5) a) Write a short note on **[12]**

i) p and h refinement method used in FEA.

ii) Iso-Parametric formulation and its importance in FEA

iii) Uniqueness of mapping and Jacobian matrix for 2D elements

b) Evaluate following using Gauss 2-point and 3-point formulae. Also compare result with exact solution. **[6]**

$$I = \int_0^4 (1-x)^2 \, dx$$

OR

Q6) a) Explain following with neat diagram : **[10]**

i) Higher order Elements

ii) Natural coordinates and area coordinate for triangular element.

b) Determine Cartesian coordinate of gauss point (0.5,0.5) for given element as shown in figure 3. **[8]**

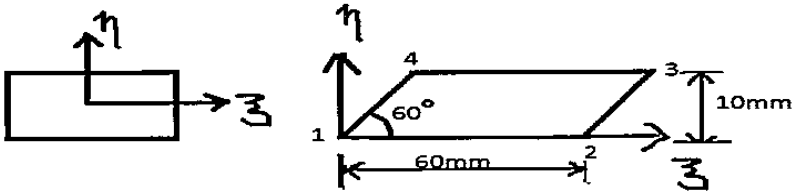

Figure 3

Q7) a) Write down governing equation of steady state heat transfer. Also write down element stiffness matrix and compare it with bar element. **[6]**

b) Determine temperature distribution in the wall given in figure 4. Outer temperature of wall is 20°C. Convection heat transfer is take place on the inner surface of the wall. **[10]**

Take : Convection coefficient = 25W/m^2 °C , T_∞ = 800°C

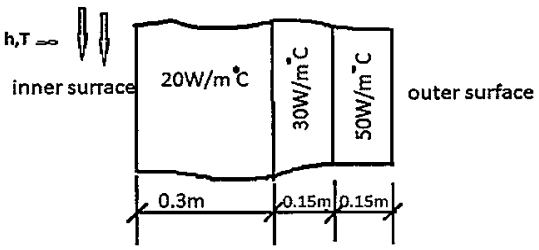

Figure 4

OR

Q8) a) Derive FEA stiffness matrix for Pin Fin heat transfer problem. **[6]**

b) A metallic fin, with thermal conductivity 400 W/m°K, 0.1cm thick and 10 cm long extends from a plane wall having temperature 235 °C. Determine the temperature distribution along the fin if heat is transferred to ambient air at 20 °C with heat transfer coefficient of 9W/m^2 °C. Take

width of fin as 1 m. Take three elements. **[10]**

Q9) Find the natural frequencies of longitudinal vibrations of the same stepped shaft of area A and 2A of equal length(L) using consistent and lumped mass matrix method and compare the results. Refer figure 5. **[16]**

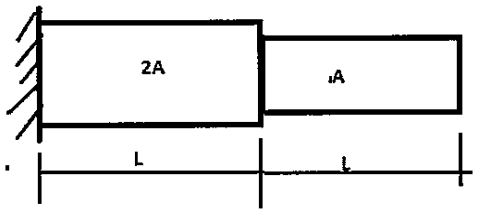

Figure 5

OR

Q***10)*** a) Find the natural frequency of vibration using consistant mass and lumped mass matirx method with one element of bar. Take : $E = 2 \times 10^{11} N/m^2$, $\rho = 7800 kg/m^2$, L = 1 m. **[10]**

b) Write lumped mass matrix and consistent mass matrix for **[6]**

i) Bar Element

ii) Beam Element



Total No. of Questions : 10]

SEAT No. : ____

PB4932

[Total No. of Pages : 2

[6263]-604
B.E. (Mechanical)
TRIBOLOGY
(2015 Pattern) (Semester-VIII) (Elective-III) (402049 A)

Time : 2½ Hours] ***[Max. Marks : 70***

Instructions to the candidates:

1) ***Attempt Q.1 or Q.2, Q.3 or Q.4, Q.5 or Q.6, Q.7 or Q.8, Q.9 orQ.10.***
2) ***Neat diagrams must be drawn whenever necessary.***
3) ***Figures to the right indicates full marks.***
4) ***Use of electronic pocket calculator is allowed.***
5) ***Assume suitable data, if necessary.***

Q1) a) What are the various modes of lubrication? Explain with neat sketches. **[6]**

b) Explain the methods of recycling of used oil. **[4]**

OR

Q2) a) List the different factors affecting the wear rates. **[4]**

b) Write short note on: Types and uses of greases. **[6]**

Q3) a) Explain the causes of friction. **[4]**

b) Explain **[6]**

i) Surface Fatigue Wear
ii) Corrosive Wear
iii) Cavitation Erosion

OR

Q4) The following data is given for 360º hydrodynamic bearing **[10]**

Radial load = 6.5kN,
Journal speed = 1200rpm
Journal diameter =60mm
Bearing length = 60mm
Minimum oil film thickness 0.009mm
The fit between journal and bearing is H7e7 for which
Hole diameter = mm
Shaft diameter = mm
Specify the viscosity of lubricating oil for given hydrodynamic bearing.

		S	f		
1	0.8	0.631	12.8	3.59	0.280
	0.6	0.264	5.79	3.99	0.497
	0.4	0.121	3.22	4.33	0.680
	0.2	0.0446	1.70	4.62	0.842

P.T.O.

Q5) a) Explain in brief the working principle of hydrostatic bearing with figure. State the advantages and limitations of hydrostatic bearing. **[10]**

b) State and explain power losses in hydrostatic step bearing. Also explain temperature rise in hydrostatic step bearing. **[8]**

OR

Q6) a) Explain the phenomenon of squeeze film lubrication and its four practical examples. **[8]**

b) The following data is given for hydrostatic step bearing **[10]**

Thrust load = 450kN,

Shaft speed = 750 rpm

Shaft diameter = 400 mm,

Recess diameter = 250mm

Viscosity of lubricant = 30cP

Calculate

i) The optimum oil film thickness for power loss

ii) Frictional power Ioss

iii) Pumping power loss

Show the variation of power loss against oil film thickness.

Q7) a) Explain Hertz theory of contact stress with example. Explain in brief contact stresses between two cylinder. **[8]**

b) Compare the gas lubrication bearing with oil lubricated bearings. **[8]**

OR

Q8) a) Explain in brief about the active and passive magnetic bearing. What are its advantages over conventional bearing? **[8]**

b) Explain the singificance of the Hertz theory in Elasto-hydrodynamic lubrication. Write Ertel- Grubin equation with all specific terms and also write the limitation of this equation. **[8]**

Q9) a) Explain surface topography phenomenon. **[8]**

b) Explain with sketches the methods used for corrosion resistance. **[8]**

OR

Q10)a) Explain in details the techniques used for the surface measurement. **[8]**

b) Differentiate between apparent and real area of contact and explain any two parameters used for the measurement of surface roughness. **[8]**

☼ ☼ ☼

Total No. of Questions : 10]

SEAT No. :

PB4933

[Total No. of Pages : 4

[6263]-605

B.E. (Mechanical-Sandwich Engineering)

FINITE ELEMENT ANALYSIS

(2015 Pattern) (Semester -VIII) (402068C)

(Elective - I)

Time :2½ Hours] *[Max. Marks :70*

Instructions to the candidates:

1) ***Solve Q.1or Q.2, Q.3 or Q.4, Q.5 or Q.6, Q.7 or Q.8, Q.9 or Q.10.***
2) ***Draw suitable neat diagram, whenever necessary.***
3) ***Figures to the right indicates full marks.***
4) ***Use of electronic pocket calculator is allowed.***
5) ***Assume suitable data, if required.***

Q1) a) List different approaches used in FEA. Explain in brief "Principle of Minimum Potential Energy (PMPE)". **[6]**

b) List different types of analysis and explain Crash analysis. **[4]**

OR

Q2) a) A Beam as shown in figure 1 is subjected to UDL of 16N/m over a length L. Determine slope and deflection at midpoint of beam and reactions at support. Take EI = 10^6 Nm^2. Length of a Beam = 2L = 72m. **[10]**

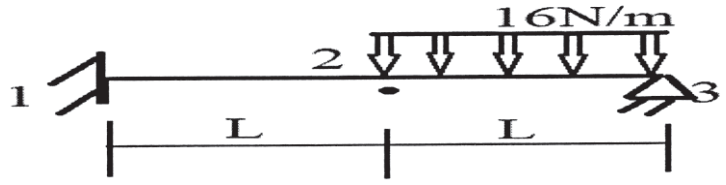

Figure:1

Q3) a) Write a note on strain - displacement relationship matrix for CST element. **[6]**

b) Explain C^o and C^1 type of continuity and its importance in FEA during element formulation. **[4]**

OR

P.T.O.

Q4) a) CST element as shown in figure 2, is defined by nodes, I(1,1), J(6,3) and K(4,5). The shape functions N1 = 0.2 and N2- 0.3. Determine x and y coordinate of the interior point P. (Use co-factor method). **[4]**

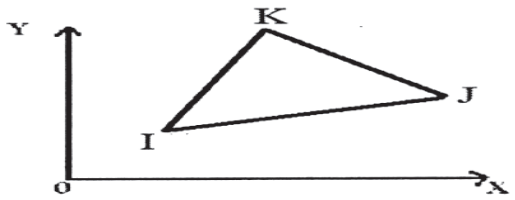

Figure:2

b) What is meant by skyline matrix method. How it is useful for reduction in memory requried for simulation in FEM. **[6]**

Q5) a) Derive shape function for 2-node bar element and 4-noded quadrilateral element using lagrange's interpolation Formulate. **[6]**

b) For the element shown in figure 3 assemble Jacobin matrix and strain-displacement matrix for the Gauss point (0.7, 0.5). **[10]**

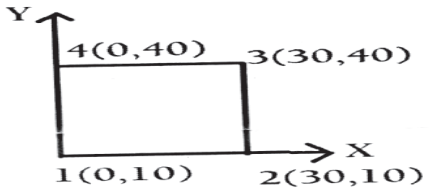

Figure:3

OR

Q6) a) Explain step by step procedure for Gauss Quadrature method. How it can be applied in iso-parametric formulation? **[8]**

b) Evaluate following Intergral: **[8]**

$$I = \int_{-1}^{1}\int_{-1}^{1} (2x^4 + 3y^2 + x^3y)dx\ dy$$ (Using 2- point Gauss Quadrature method)

Q7) a) Explain "1-D steady state heat transfer promblem with conduction and convection (Circular Fins)" with appropriate governing equation. **[8]**

b) A metallic fin, with thermal conductivity k=70W/m ^{o}K, 1cm radius and 5 cm long , extends from a plane wall whose temperature is 140 ^{o}C. Determine the temperature distribution along the fin. Take ambient air at 20°C with h = 5W/m2^{o}K. (Take two elements along the fin) **[10]**

OR

Q8) a) List and explain steps to slove 1-D steady state heat transfer problem using finite element method. **[8]**

b) A Composite wall as shown in figure 4, find the temperature at inner surface, outer surface and interfaces. **[10]**

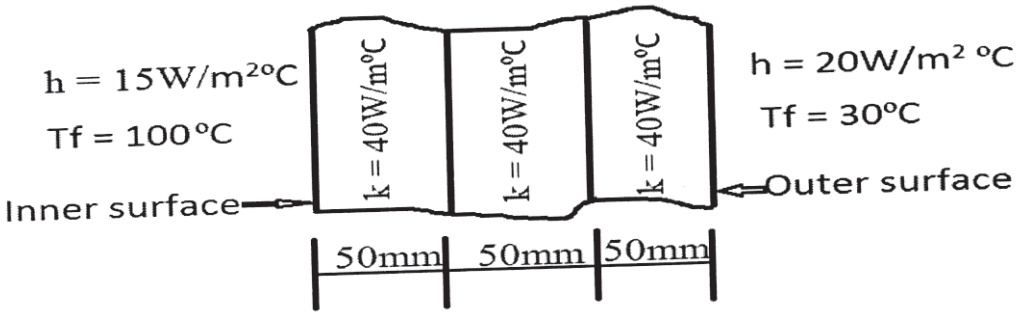

Figure 4

Q9) a) Derive consistent mass matrix for bar element. **[6]**

b) Find the natural frequency of longitudinal vibration using lumped mass matrix method with three elements of bar as shown in figure 5. Take E =2 × 10^{11}N/m^2, ρ = 7800kg/m^3, L= 1A = 30×10^{-6}m$^{2.}$ **[10]**

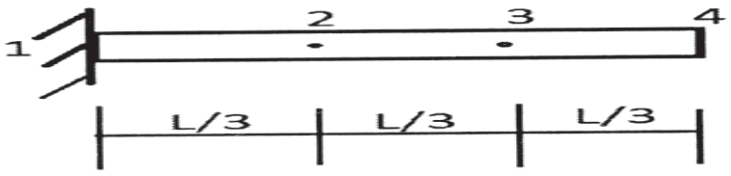

Figure:5

OR

Q10)a) Find the natural frequencies of transverse vibration of bar as shown in figure 6, having diameter d = 0.02m and length = 1m. Take E =2 × 10^{11}N/m^2, ρ = 7800kg/m^3 .Consider bar as one element (Use Consistent mass matrix). **[10]**

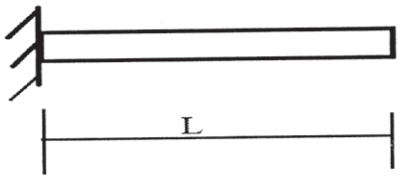

Figure:6

b) Derive consistent mass matrix for Beam element. **[6]**

Total No. of Questions : 8]

SEAT No. :

PB4934

[Total No. of Pages : 3

[6263]-606
B.E. (Mechanical Sandwich)
HYDRAULICS AND PNEUMATICS
(2015 Pattern) (Semester - VIII) (402068 D)

Time : 2½ Hours] *[Max. Marks : 70*

Instructions to the candidates:

1) ***Answer Q.1 or Q.2, Q.3 or Q.4, Q.5 or Q.6, Q.7 or Q.8.***
2) ***Figures to the right indicate full marks.***
3) ***Use of non-programmable scientific Calculator is allowed.***
4) ***Assume data wherever necessary and mention it.***
5) ***Draw neat and suitable figure wherever necessary.***
6) ***Use of steam table is permitted.***

Q1) a) Explain applications of fluid power in mining industry. **[4]**

b) Explain the cushioning of cylinder with a neat sketch. **[8]**

c) Explain with a net sketch the working of pressure compensated flow control valve. **[8]**

OR

Q2) a) Classify different hydraulic actuators. What are their typical applications? **[6]**

b) Discuss any six important factors considered for selection of hydraulic fluids. **[6]**

c) Mention different types of pressure control valves. Explain pilot operated pressure reducing valve. **[8]**

Q3) a) Draw meter-in and meter-out circuit and State their advantages and disadvantages. **[8]**

b) Explain with neat sketch hydraulic circuit for clamping component on drilling machine. **[8]**

OR

Q4) a) Draw unloading circuit of pump and explain its working. **[8]**

b) Explain the following terms in relation with filters **[8]**

i) Beta rating

ii) Absolute rating

iii) Calculate Beta ratio and Beta efficiency of filter when, during test operations 30,000 particles greater than 20 micron enter the filter and 1050 of these pass through the filter.

P.T.O.

Q5) a) Explain the meaning of 'conditioned air' used in pneumatic system. Discuss the components used to get conditioned air. **[5]**

b) Explain with net sketch working of "AND" valve with a typical application. **[8]**

c) Compare in brief hydraulic and pnematic motor in the context of operating speed and load. **[4]**

OR

Q6) a) Explain with a neat sketch the shuttle valve and draw a typical circuit showing all parts. **[8]**

b) Draw a net sketch and explain working of a typical 5 port 2 position solenoid operated directional control valve used in pneumatic circuit.**[9]**

Q7) a) The automatic door of a bus is operated by a double acting cylinder. Both the opening and closing of the door are performed with a selector switch. The time duration for which the door is kept open, is decided by the bus driver. The speed of closing and opening the door is adjustable. Draw the pneumatic circuit. **[10]**

b) Analyze the circuit shown in Fig 7 (b). **[7]**

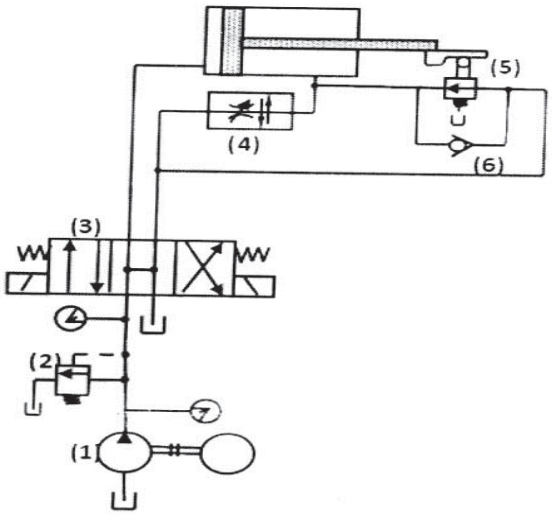

Fig. 7 (b)

OR

Q8) A cylinder has a bore of 80mm diameter and a rod of 45mm diameter. It drives a load of 7000N, travelling at a velocity of 15m/min. The load slides on a flat horizontal surface having a coefficient of friction of 0.12. The load is to be decelerated to rest within a cushion length of 20mm. If the relief valve is set at 50 bar, compute the fluid pressure developed in the cushion. **[17]**

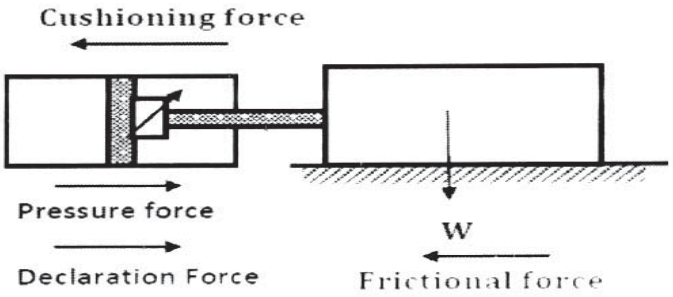

(a) Suction strainer:

Model	Flow Capacity (lpm)
S_1	38
S_2	76
S_3	152

(b) Pressure gauge:

Model	Range (bar)
PG_1	0 – 25
PG_2	0 – 40
PG_3	0 – 100
PG_4	0 – 160

(c) Vane pump:

Model	Delivery in lpm		
	At 0 bar	At 35 bar	At 70 bar
P_1	8.5	7.1	5.3
P_2	12.9	11.4	9.5
P_3	17.6	16.1	14.3
P_4	25.1	23.8	22.4
P_5	39.0	37.5	35.6

(d) Relief valve:

Model	Flow capacity (lpm)	Max. working pressure & bar
R_1	11.4	70
R_2	19.0	210
R_3	30.4	70
R_4	57.0	105

(e) Flow control valve:

Model	Working pressure (bar)	Flow range (lpm)
F_1	70	0 - 4.1
F_2	105	0 - 4.9
F_3	105	0 - 16.3
F_4	70	0 - 24.6

(f) Directional control valve:

Model	Max. working pressure & bar	Flow capacity (lpm)
D_1	350	19
D_2	210	38
D_3	210	76

(g) Check valve:

Model	Max. working Pressure & bar	Flow capacity (/pm)
C_1	210	15.2
C_2	210	30.4
C_3	210	76

(h) Pilot operated check valve:

Model	Max. working Pressure (bar)	Flow capacity (lpm)
PO_1	210	19
PO_2	210	38
PO_3	210	76

(i) Cylinder (Max. working pressure 210 bar)

Model	Bore diameter (mm)	Rod diameter (mm)
A_1	25	12.5
A_2	40	16
A_3	50	35
A_4	75	45
A_5	100	50

(j) Oil reservoirs:

Model	Capacity (litres)
T_1	40
T_2	100
T_3	250
T_4	400
T_5	600

* * *

Total No. of Questions : 10]

SEAT No. :

PB4935

[Total No. of Pages : 2

[6263]-607
B.E.(Mechanical - Sandwich)
ENERGY AUDIT & MANAGEMENT
(2015 Pattern) (Semester-VIII) (Elective -I) (402069 A)

Time : 2½ Hours] *[Max. Marks : 70*

Instructions to the candidates:

1) ***Answer Q.1 or Q.2, Q.3 or Q.4, Q.5 or Q.6, Q.7 or Q.8., Q.9 or Q.10.***
2) ***Answers should be written in same answer book.***
3) ***Neat diagrams must be drawn wherever necessary.***
4) ***Figures to the right indicate full marks.***
5) ***Use of log tables, slide rules, mollier charts, electronic calculator and steam table is allowed.***
6) ***Assume suitable data, if necessary.***

Q1) a) Explain energy scenario in India. List three strategic measures for meeting the future energy requirements of India. **[6]**

b) Explain four important features of the energy conservation act, 2001. **[4]**

OR

Q2) a) Explain detailed energy audit. **[6]**

b) Explain working of lux meter in energy audit. **[4]**

Q3) a) A company invest in a project Rs. 1,00,000 to start it. After starting it get a benefit of Rs. 18,000 every year and spent Rs. 2000 on maintenances, Rs.3,000 on salaries of employee and Rs. 1,000 as taxes to government every year. Find payback period for this project. **[10]**

OR

Q4) a) In an industry, an electrical oven consuming 1100 kWh/batch, is proposed for replacement, by a FO fuel fired oven. Calculate the simple payback period, given the following data: **[10]**

Number of batches/years = 4000

Efficiency of electric oven = 82%

Efficiency of FO fired oven = 55%

Cost of FO = Rs.35,000/Tonne

GCV of FO = 10,200 kcal/kg

Electricity cost = Rs.6.0/kWh

Investement for FO fired oven = Rs. 125 Lakhs

P.T.O.

Q5) a) What is steam distribution system? Explain with figure. **[8]**

b) Calculate the efficiency of the furnace by using direct method with the help of following data: Weight of the stack = 5600 kg/hr, specific heat of stack = 0.13 kcal/kg k, consumption of fuel = 325 kg/hr, Ambient temp =40ºC, Maximum working temperature of furnace = 1400ºC, Calorific value of oil = 10,000kcal/kg. **[10]**

OR

Q6) a) What are the different losses in a boiler system, which are considered in indirect method for calculating boiler efficiency? Explain with neat sketch. **[8]**

b) A centrifugal pump is pumping 85 m^3/hr of water and pressure rise in the pump is 6kg/cm^2(guage). If power drawn by motor is 25 kw find out the pump efficiency. Assume motor efficiency as 90% and water density as 998kg/m^3. **[10]**

Q7) a) What are the factors affecting energy efficiency of electric motors? **[8]**

b) What is standard labelling program? List the equipment and appliances covered under standard and labelling program. **[8]**

OR

Q8) a) Explain in detail the energy efficiency improvement in electric motors. **[8]**

b) Enlist are the different types of lamps used in lighting systems? Write their features and applications. **[8]**

Q9) a) What is cogeneration? Write down principle of cogeneration and its advantages. **[8]**

b) Explain with neat sketch Heat Wheel used for waste heat recovery in the process industry. **[8]**

OR

Q10)a) Explain the topping cycle and the bottoming cycle with sketch. **[8]**

b) Write short note on carbon credit. **[8]**



Total No. of Questions : 10]

SEAT No. :

PB4936

[Total No. of Pages : 2

[6263]-608
B.E. (E&TC)
MOBILE COMMUNICATION
(2015 Pattern) (Semester -VIII) (404189)

Time :2½ Hours] *[Max. Marks :70*

Instructions to the candidates:

1) ***Solve Q.1or Q.2, Q.3 or Q.4, Q.5 or Q.6, Q.7 or Q.8, Q.9 or Q.10.***
2) ***Neat diagrams must be drawn wherever necessary.***
3) ***Figures to Right indicates full marks.***
4) ***Use of electronic pocket calculator is allowed.***

Q1) a) State & Explain Manual Switching System in detail. **[6]**

b) During busy hour 1200 calls were offered to a group of trunks and 6 calls were lost. The average call duration was mintues. Find **[4]**

i) Traffic Offered
ii) Traffic Carried
iii) Traffic Lost
iv) Grade of Service
v) Total duration of peroids of congestion.

OR

Q2) a) Draw & Explain principle of Grading. **[6]**

b) Explain with a neat diagram the concept of cell splitting. **[4]**

Q3) a) Compare Inchannel Signallind & Common Channel Signalling in term of **[4]**

i) Requirement of Trunks
ii) Requirement of Signalling equipment
iii) Cost
iv) Speed

b) A Group of 5 trunks is offered 2 Erlangs of traffic.Find **[6]**

i) Grade of Service
ii) Probability that only one trunk is busy
iii) Probability that only one trunk is free

OR

Q4) a) Draw & Explain concept of Frequency Reuse. **[5]**

b) Design two stage switching network for incoming trunks is greater than outgoing trunks. **[5]**

P.T.O.

Q5) a) Draw GSM system Architectur & Explain function of each. **[8]**

b) Write a basic radio transmission parameters used in GSM System. **[8]**

OR

Q6) a) State & Explain different data services used in GSM. **[8]**

b) Compare GSM900 & DCS1800 in term of [**8]**

i) Uplink Frequency
ii) Downlink Frequency
iii) Bandwidth
iv) Number of Carries used
v) Transmission data rate
vi) Carrier Spacing
vii) Number of time slots per channel
viii) Maximum BS Power.

Q7) a) Classify logical channel in GSM system & Explain in detail. **[9]**

b) With neat diagram explain hand over mechanism in GSM. **[8]**

OR

Q8) a) Draw & Explain GPRS Architecture. **[8]**

b) Draw & Explain mobile to Moblie call Process? **[9]**

Q9) a) Discuss disruptive technologies of 5G Moblie communication. **[9]**

b) Explain with diagram, the working operation of LTE network structure. **[8]**

OR

Q10)a) Explain various requirements for 5G. **[9]**

b) Compare GSM & CDMA related to following parameters. **[8]**

i) Uplink Frequency
ii) Downlink Frequency
iii) Carrier Spacing
iv) Modulation Method

Total No. of Questions : 8]

SEAT No. :

PB-4937

[Total No. of Pages : 3

[6263]-609

B.E. (Electronics & Telecommunication)

BROADBAND COMMUNICATION SYSTEMS

(2015 Pattern) (Semester - VIII) (404190)

Time : 2½ Hours] *[Max. Marks : 70*

Instructions to the candidates:

1) ***Answer Que. 1 or Que. 2, and Que. 3 or Que. 4 and Que. 5 or Que. 6 and Que. 7 or Que. 8***
2) ***Assume suitable data if necessary.***
3) ***Draw neat diagrams wherever necessary.***
4) ***Figures to the right indicates full marks.***

Q1) a) Define and explain the following terms in the context of an optical fiber: **[7]**

i) Numerical aperture

ii) Critical angle

iii) Total internal reflection

b) Explain the link power budget for point-to-point optical fiber link. Write an expression for the power budget. **[7]**

c) Explain FBG and Hence explain its usage as an optical isolator. **[6]**

OR

Q2) a) What is Graded Index (GI) Fibers? Explain with a diagram how ray transmission takes place in GI Fiber. **[7]**

b) Based on the Following Points, Compare PIN photodiode and APD **[7]**

i) Responsivity

ii) Speed

iii) Sensitivity

c) Draw and explain the 2×2 coupler. Write formulae to calculate the splitting ratio, excess loss, insertion loss and cross talk. **[6]**

P.T.O.

Q3) a) Compare LEO, MEO, CEO satellite orbits. State its applications. **[8]**

b) Describe the launch sequence used for satellite launching. **[8]**

OR

Q4) a) State and explain Kepler's three laws of planetary motion. Explain the forces associated with it. **[8]**

b) Explain with a diagram the following terms concerning satellite communication. **[8]**

ii) Perigee

ii) Prograde orbit

iii) Argument of perigee

iv) Look Angle

Q5) a) Explain with the help of a block diagram typical tracking, telemetry command and monitoring system. **[8]**

b) Explain Four types of antenna used for satellite communication. Draw and explain typical satellite antenna coverage zones. **[8]**

OR

Q6) a) What is a Communication Subsystem? Explain it in detail. **[8]**

b) Draw and explain the double conversion transponder for the 14/11 GHz band. Specify frequencies at each block **[8]**

Q7) a) What are the different steps required for satellite downlink design? **[9]**

b) A 4 GHz receiver has the following gains and noise temperature. T_{in} = 25 K, T_{RF} = 50 K, T_{IF} =1000 K, T_m = 500K, G_{RF}= 23 dB, G_{IF}=30 dB and G_m=0 dB . Find the system noise temperature. **[9]**

OR

Q8) a) A C-band earth station has an antenna with a transmit gain of 54dB. The transmitter output power is set to 100W at a frequency of 6.100GHz. The signal is received by a satellite at a distance of 37,500 km by an antenna with a gain of 26 dB. The signal is then routed to a transponder with a noise temperature of 500K a bandwidth of 36 MHz and a gain of 110 dB. calculate **[9]**

i) The path loss at 6.1 GHz, the wavelength is 0.04918m

ii) The power at the output port of the satellite antenna in dBW.

iii) Calculate the noise power at the transponder input, in dBW, in a bandwidth of 36 MHz. Assume Boltzman's constant K = – 228.6 dBW.

iv) Calculate the C/N ratio, in dB, in the transponder.

b) Explain the following terms with mathematical equations concerning satellite communication. **[9]**

i) Path loss

ii) C/N Ratio

iii) G/T Ratio

⌘⌘⌘

Total No. of Questions : 8]

SEAT No. :

PB4938

[Total No. of Pages : 3

[6263]-610
B.E. (E & TC)
MACHINE LEARNING
(2015 Pattern) (Semester - VIII) (Elective-III) (404191 A)

Time : 2½ Hours] *[Max. Marks : 70*

Instructions to the candidates:

1) ***Answer Q.1 or Q.2, Q.3 or Q.4, Q.5 or Q.6, Q.7 or Q.8.***
2) ***Neat diagrams must be drawn wherever necessary.***
3) ***Figures to the right side indicate full marks.***
4) ***Use of Calculator is allowed.***
5) ***Assume suitable data if necessary.***

Q1) a) In context with machine learning. elaborate the following terms **[8]**

i) noise

ii) Under fitting and over fitting

What are the different sources of noise in machine learning?

b) What is Machine learning? With reference to machine learning. explain Supervised, Unsupervised and Reinforcement Learning. **[6]**

c) What do you understand from K-means clustering? Explain K means clustering algorithm. **[6]**

OR

Q2) a) What do you mean by linear regression? With suitable example, describe how linear regression is used to predict the output for test example/input sample. What is non linear regression? **[8]**

b) Describe and compare following approaches used in classification problem. **[6]**

i) Discriminant function approach

ii) Discriminative models

iii) Generative models

c) In machine learning, what is the need of Dimensionality Reduction? Describe Factor Analysis with suitable example. **[6]**

P.T.O.

Q3) a) What is the significance of bias in perceptron networks? Obtain the output of neuron Y for the given network if binary sigmoid activation function is used. **[8]**

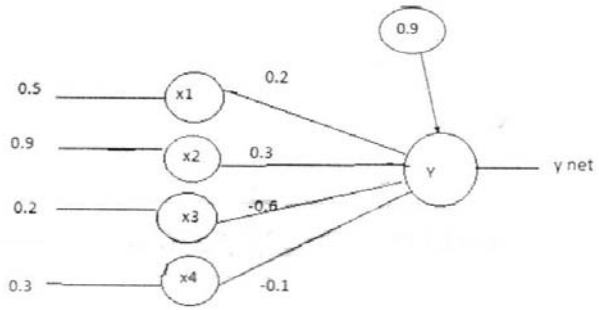

b) Compare perceptron with McCulloch-Pitts (M.P) neuron. Explain with suitable example how limitations of MP neuron are overcome using Multi Layer Perceptron (MLP)? **[8]**

OR

Q4) a) State any four activation functions used in ANN.Discuss these functions along with their properties. **[8]**

b) Design a Hebb net to implement logical AND function (Use Bipolar inputs and targets). **[8]**

Q5) a) Describe the Back propagation algorithm with the help of suitable examle. **[8]**

b) Consider Kohenon net with two cluster units and three input units as shown in the figure. The weight vectors for the cluster units are [0.9, 0.7, 0.6] and [0.4, 0.3, 0.5] Find the winning cluster unit for input pattern [0.4, 0.2, 0.1]. Use learning rete 0.2. Find the new weights for winning unit. **[8]**

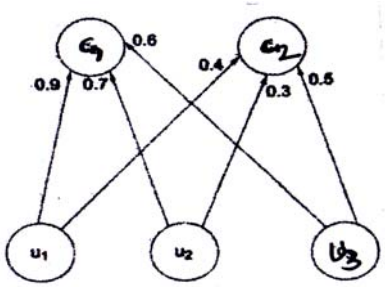

OR

Q6) a) What is Learning vector Quantizer? Justify that LVQ is supervised technique. Describe how learningVector Quantizer works. **[8]**

b) What is radial basis function network (RBFN)? State four applications of RBFN. Compare RBFN with Multi Layer Perceptron (any four points). **[8]**

Q7) a) With reference to convolution layer of CNN, explain

i) Padding

ii) Stride and give the relation of stride, padding and filter size with width and height of convolution layer output. Given a 128 ×128× 3 image and 6 filters of size 9 × 9 × 3, what will be the dimension of the output volume when a stride of 1 and a padding of 2 is considered? **[10]**

b) What is convolution? Explain 2D convolution process with suitable example. How 2D convolution is used in 3D filtering in Convolutional Neural networks? **[8]**

OR

Q8) a) What are the challenges in conventional machine learning? How they are overcome in deep machine learning techniques? List any four applications of deep learning. **[10]**

b) Explain ReLU activation function in detail. What are the different variants of ReLU activation function? How these variants are advantageous over ReLU? **[8]**

❋ ❋ ❋

Total No. of Questions : 10]

SEAT No. :

PB4939

[Total No. of Pages : 2

[6263]-611

B.E. (Electronics & Telecommunication)

AUDIO VIDEO ENGINEERING

(2015 Pattern) (Semester - VIII) (404191 E) (Elective-III-C)

Time : 2½ Hours] *[Max. Marks : 70*

Instructions to the candidates:

1) ***Answer Q.1 or Q.2, Q.3 or Q.4, Q.5 or Q.6, Q.7 or Q.8, Q.9 or Q.10.***
2) ***Neat diagrams must be drawn wherever necessary.***
3) ***Figures to the right indicate full marks.***
4) ***Use of Calculator is allowed.***
5) ***Assume suitable data if necessary.***

Q1) a) Define **[5]**

i) Hue

ii) Saturation

iii) Luminance

b) Draw a neat block diagram of color TV receiver and explain function of each block. **[5]**

OR

Q2) a) Explain the PAL and NTSC analog TV standards with advantages and disadvantages. **[5]**

b) Discuss the interlaced and progressive scanning with suitable diagram. **[5]**

Q3) a) With a block diagram explain the component encoded MAC DTV transmitter. **[5]**

b) State the operating principle of camcorder. **[5]**

OR

Q4) a) With suitable diagram explain 3DTV system. **[5]**

b) Draw and explain direct to home T.V. System (DTH). Also enlist the advantages for the same. **[5]**

P.T.O.

Q5) a) What are the features of IPTV? Explain the architecture of IPTV. **[8]**

b) What is mobile TV? What are its challenges and the hardware requirements? **[8]**

OR

Q6) a) Explain Wi-Fi TV with relevant block diagram in detail. **[8]**

b) Explain the concept of IP audio and video. **[8]**

Q7) a) Draw the block diagram of CD recording and explain. Compare CD, DVD and Blue ray DVD. **[10]**

b) Explain the different methods of sound recording and reproduction. **[8]**

OR

Q8) a) Write a short note on variable density method of optical recording. **[10]**

b) Write short note on MP3 player. Explain the need of Audio compression. **[8]**

Q9) a) Define reverberation time? Explain the importance of reverberation. What are the factors on which reverberation time depends? **[9]**

b) State the various types of loudspeakers with its working. **[7]**

OR

Q10)a) Enlist the basic requirements of PA system. Draw the block diagram of typical cordless PA system. Explain it in detail. **[7]**

b) Define the following terms with respect to sound acoustics **[9]**

i) Acoustic chamber

ii) Absorption Coefficient

iii) Studio acoustics

❋ ❋ ❋

Total No. of Questions : 10]

SEAT No. :

PB4940

[Total No. of Pages : 2

[6263]-612
B.E. (Electronics and Telecommunication)
ROBOTICS
(2015 Pattern) (Semester-VIII) (404192 A)

Time : 2½ Hours] *[Max. Marks : 70*

Instructions to the candidates:

1) ***Attempt Q.1 or Q.2, Q.3 or Q.4, Q.5 or Q.6, Q.7 or Q.8, Q.9 orQ.10.***
2) ***Figures to the right indicates full marks.***
3) ***Assume suitable data, necessary.***

Q1) a) Define the anatomy of robot. **[5]**

b) Discuss in detail any two industrial applications of the robots. **[5]**

OR

Q2) a) Define the terms: Actuators and Torque. **[5]**

b) Explain how robots can be classified based on the types of joints with the help of neat sketches? **[5]**

Q3) a) List types of end effector. Explain the selection criterion for each type for various applications? **[5]**

b) Explain the magnetic and mechanical gripper in detail. **[5]**

OR

Q4) a) Explain need for sensors and vision system in the working and control of a robot. **[5]**

b) Explain image acquisition and processing techniques. **[5]**

Q5) a) What are different parameters involved in Trajectory Planning. How Trajectory planning is different for flexible joint than rigid joint. **[8]**

b) What do you understand by link inertia tensor and manipulator inertia tensor? **[8]**

OR

Q6) a) Explain the Newton Euller formulation used for a robotic manipulator. **[8]**

b) Explain the term – **[8]**

i) Robot arm dynamics

ii) Robot arm kinematics

P.T.O.

Q7) a) Write note on different feedback sensors used in robotics. **[8]**

b) Explain in detail Robot Language structure and its element. **[8]**

OR

Q8) a) How does line follower robot works. Write any one line following algorithm in detail. **[8]**

b) Write a simple program for sensing distance and direction of Robot. **[8]**

Q9) a) Explain the models of flexible link and joints. **[9]**

b) Draw? describe giving appropriate examples how robots can be used for material handling and assembly. **[9]**

OR

Q10)a) Design a model for mechanic arms and lifting systems. **[9]**

b) Draw architectue of robot human interaction. Explain importance of each element. **[9]**



Total No. of Questions : 8] **SEAT No. :**

PB4941 **[Total No. of Pages : 2**

[6263]-613
B.E. (Electronics & Tele Communication)
WIRELESS SENSOR NETWORKS
(2015 Pattern) (Semester-VIII) (Elective-IV) (404192 C)

Time : 2½ Hours] ***[Max. Marks : 70***

Instructions to the candidates:

1) ***Attempt Q.1 or Q.2, Q.3 or Q.4, Q.5 or Q.6, Q.7 or Q.8.***
2) ***Neat, diagrams must be drawn wherever necessary.***
3) ***Figures to the right indicates full marks.***

Q1) a) What are the design constraints and challenges of WSN? **[6]**

b) Explain various properties of wireless links. **[6]**

c) Explian 6 LoWPAN protocol and it's protocol stack. **[8]**

OR

Q2) a) List various applications of WSN and explain any one of them in detail. **[6]**

b) Explain Sensor MAC protocol (S–MAC) with the help of suitable diagram. **[6]**

c) Explain features of High Data Rate WPAN wireless standard (IEEE 802.15.3) and it protocol stack. **[8]**

Q3) a) What are the routing challenges of WSN? **[4]**

b) List any four routing protocols of WSN and explain any one of them in detail. **[6]**

c) Write a short note on : Range-based localisation. **[6]**

OR

Q4) a) Explain flooding with the help of suitable diagram. **[6]**

b) What is localization in WSN? Explain it's need. **[4]**

b) Explain location based routing with the help of neat diagram. **[6]**

Q5) a) Explain compressive sampling in detail. **[8]**

b) List various security attacks in WSN. Explain any two of them in detail. **[10]**

OR

P.T.O.

Q6) a) Elaborate security issues in WSN. **[6]**

b) What is data aggregation in WSN? Explain. **[6]**

c) What are different clustering techniques in WSN? **[6]**

Q7) a) What is general Testing and Validation process in WSN application? **[8]**

b) Explain Bottom-up implementation process. **[8]**

OR

Q8) a) What are general problems for deploying WSN applications? **[8]**

b) Explain application of WSN in healthcare domain with the help of suitable diagram. **[8]**



Total No. of Questions : 8]

SEAT No. :

PB-4942

[Total No. of Pages : 2

[6263]-614

B.E. (Electronics & Telecommunication)

RENEWABLE ENERGY SYSTEMS

(2015 Pattern) (Semester - VIII) (404192D) (Elective -IV)

Time : 2½ Hours] ***[Max. Marks : 70***

Instructions to the candidates:

1) ***Answer Q1 or Q2, Q3 or Q4, Q5 or Q6, Q7 or Q8.***
2) ***Neat diagrams must be drawn wherever necessary.***
3) ***Figures to the right side indicate full marks.***
4) ***Use of non programmable calculator is allowed.***
5) ***Assume Suitable data if necessary.***

Q1) a) What are the different renewable energy resources? Explain in short. **[8]**

b) With neat diagram explain flat plate type solar collector. **[6]**

c) Explain the current voltage characteristics of solar cell also define fill factor. **[6]**

OR

Q2) a) Explain how does the environment get affected due to thermal power plants? **[8]**

b) Define the following terms Local clock time and local apparent time. **[6]**

c) Explain solar distillation application of solar energy. **[6]**

Q3) a) How wind energy systems are classified? Discuss in brief. **[6]**

b) Describe with neat sketch the working of wind energy converter system (WECS) with main components. **[6]**

c) With the help of neat sketch explain any two types of rotor used in wind turbine. **[6]**

OR

P.T.O.

Q4) a) Explain following terms related to WEC systems. **[6]**

i) Camber

ii) Nacelle

iii) Hub

iv) Cut-in speed

v) Cut-out speed

vi) Wind Vane

b) Write advantages and disadvantages of WEC systems. **[6]**

c) Write a note elaborating the environmental impact of wind energy. **[6]**

Q5) a) Explain the various types of geothermal resources available. **[6]**

b) Draw a load duration curve and explain the important factors needed to absorb tidal power into grid supply. **[6]**

c) Explain the term -Geothermal field. **[4]**

OR

Q6) a) What are the different methods of geothermal power generation? Explain flashed steam geothermal power plant. **[8]**

b) Write short note on **[8]**

Tidal Energy

Ocean Energy

Q7) a) What are the advantages and disadvantages of fuel cell power plant? **[6]**

b) Draw and explain operating characteristics of fuel cells. **[6]**

c) Write a note on fuel processor **[4]**

OR

Q8) a) Define fuel cell. Explain principle of operation of acidic fuel cell. **[8]**

b) List different types of fuel cell and explain alkaline fuel cell with neat diagram. **[8]**

⌘⌘⌘

Total No. of Questions : 8]

SEAT No. :

PB4943

[Total No. of Pages : 2

[6263]-615
B.E. (Electronics Engineering)
WIRELESS SENSOR NETWORKS
(2015 Pattern) (Semester -VIII) (404212B) (Elective - IV)

Time :2½ Hours] *[Max. Marks :70*

Instructions to the candidates:

1) ***Answer Q.1or Q.2, Q.3 or Q.4, Q.5 or Q.6, Q.7 or Q.8.***
2) ***Figures to the right indicate full marks.***
3) ***Assume suitable data, if necessary.***

Q1) a) List and explain the features of the IEEE 802.15.4 MAC. **[6]**

b) Explain the performance metrics of wireless links in Wireless Sensor Networks. **[6]**

c) Draw and explain architecture of WSN. Explain the Characteristics of a WSN. **[8]**

OR

Q2) a) Draw the block diagram of Sensor Node (Mote) of WSN. Explain the hardware requirement for Sensor Node. **[6]**

b) Draw and explain Carrier Sense Multiple Access (CSMA-CA) algorithm. **[6]**

c) Write the features of Wireless HART Protocol. Draw and explain Wireless HART. **[8]**

Q3) a) Why localization of sensor node is required in WSN? What is Ranging Schemes? Explain Triangulation and Trilateration. **[8]**

b) With the help of flow diagram explain location-based routing protocol in WSN. **[8]**

OR

Q4) a) What is mean by routing in WSN? Why routing protocols are required in WSN? Explain full - network broadcast, Unicast, Multicast and converge cast routing scenarios. **[8]**

b) Describe Localization Challenges in WSN. Explain different types of location information. **[8]**

P.T.O.

Q5) a) Explain defensive measures of attacks in Physical layer and data link layer in WSN. **[6]**

b) What is mean by clustering? Explain Random Clustering with necessary diagram. **[6]**

c) What is compression? Explain compression technique using Huffman Codes in network processing. **[6]**

OR

Q6) a) Explain the clustering techniques in Wireless Sensor Networks.Explain need of clustering in Wireless Sensor Networks. State the advantages of clustering in Wireless Sensor Networks. **[6]**

b) Explain the following perimeters of the clustering in WSN **[6]**

i) Cluster count/Number of clusters

ii) Cluster size uniformity

iii) Inter-clustering routing

iv) Intra-clustering routing

c) Explain in detail various design challenges of clustering in WSN. **[6]**

Q7) a) Explain early WSN deployment in brief. Explain the requirement analysis in WSN. **[8]**

b) What is meant by deployment of WSN? What are the general problems in WSN designing and deployment. **[8]**

OR

Q8) a) Explain the following problems in WSN deployment. **[8]**

i) Global Problems

ii) Lifetime Problems

iii) Topology Problems

iv) Link/path Problems

b) Explain the Top-down design implementation process of deployment of WSN. **[8]**

Total No. of Questions : 10]

SEAT No. :

PB4944

[Total No. of Pages : 2

[6263]-616
B.E. (Instrumentation & Control)
INDUSTRIAL AUTOMATION
(2015 Pattern) (Semester -VIII) (406269)

Time :2½ Hours] *[Max. Marks :70*

Instructions to the candidates:

1) ***Answers Q.1or Q.2, Q.3 or Q.4, Q.5 or Q.6, Q.7 or Q.8, Q.9 or Q.10.***
2) ***Neat diagrams must be drawn whenever necessary.***
3) ***Figures to the right indicates full marks.***
4) ***Assume sutiable data if necessary.***

Q1) a) Explain the HART protocol with reference to OSI model. **[6]**

b) Compare PLC & SCADA on the basis of performance criteria. **[4]**

OR

Q2) a) Explain OSI/ISO reference model in communication system. **[6]**

b) Compare RS-232 & RS-485? **[4]**

Q3) a) List and explain at list three universal commands used in HART. **[6]**

b) Justify : Foundation field bus H1 easier to use than traditional technology? **[4]**

OR

Q4) a) Develop PLC ladder diagram to turn ON motor for 10 seconds and turn off for 5 seconds. It is require to repeat process continuously **[6]**

b) Explain PWM instructions used in PLC. **[4]**

Q5) a) Develop PLC Ladder program for OR logic. **[8]**

b) Explain the PID block used in PLC system. **[8]**

OR

Q6) a) State various objectives of SCADA and types of SCADA? **[8]**

b) Explain the procedure for interfacing a PLC with SCADA system using different communication protocols. [**8]**

Q7) a) Describe how DCS supports ERP. **[10]**

b) Explain database management level and its functions in DCS systems. **[8]**

OR

Q8) a) Compare PLC and SCADA on the basis of performance criteria. **[10]**

b) What is Distributed Control System? Describe and one application in detail. **[8]**

P.T.O.

Q9) a) Explain the need of security and user management in a DCS system. **[8]**

b) Explain database management level and its functions in DCS system. **[8]**

OR

Q10)a) What is Hazop, explain the procedure of Hazop. **[8]**

b) What is Process Hazard Analysis (PHA)? How it is carried out? **[8]**

Total No. of Questions : 10]

SEAT No. :

PB-4945

[Total No. of Pages : 2

[6263]-617

B.E. (Instrumentation & Control)

BUILDING AUTOMATION

(2015 Pattern) (Semester - VIII) (Elective - III) (406270A)

Time : 2½ Hours] *[Max. Marks : 70*

Instructions to the candidates:

1) ***Answers Q1 or Q2, Q3 or Q4, Q5 or Q6, Q7 or Q8, Q9 or Q10.***
2) ***Neat diagrams must be drawn wherever necessary.***
3) ***Figures to the right side indicate full marks.***
4) ***Assume Suitable data if necessary.***

Q1) a) Explain BAS system Hierarchy? **[6]**

b) Explain importance Psychometric chart? **[4]**

OR

Q2) a) Explain Pressure dependent VAV? **[5]**

b) Explain M-bus protocol? **[5]**

Q3) a) Explain various temperature sensors used in BAS system? **[6]**

b) Explain operation of AHU in Volume matching mode? **[4]**

OR

Q4) a) Explain glycol heat recovery loop? **[6]**

b) Explain the terms; Specific Heat, Latent Heat, Sensible Heat, Dew Point temperature? **[4]**

Q5) a) Give classification FAS loops . Explain any one? **[10]**

b) Explain Conventional Fire alarm system? **[8]**

OR

P.T.O.

Q6) a) Explain in details the refrigeration cycle of HVAC system? **[10]**

b) Explain different types of cameras used in building security? **[8]**

Q7) a) Explain NFPA guidelines for fire alarm system? **[8]**

b) Draw and explain the block diagram of access control system? **[8]**

OR

Q8) a) Explain VESDA (Very early smoke detection system) system for FAS? **[8]**

b) Explain in details MI fare cards? **[8]**

Q9) a) Explain SLC wiring and classification? **[8]**

b) Explain different heat exchangers used in Boilers? **[8]**

OR

Q10)a) Explain Absorption chiller in detail? **[8]**

b) Explain power supply requirement and its designing parameters for FAS system? **[8]**

⌘⌘⌘

Total No. of Questions : 10]

SEAT No. :

PB4946

[Total No. of Pages : 2

[6263]-618

B.E. (Computer Engineering)

ARTIFICIAL INTELLIGENCE AND ROBOTICS

(2015 Pattern) (Semester -VII) (410242)

Time :2½ Hours] *[Max. Marks :70*

Instructions to the candidates:

1) ***Answers Q.1or Q.2, Q.3 or Q.4, Q.5 or Q.6, Q.7 or Q.8, Q.9 or Q.10.***
2) ***Neat diagrams must be drawn whenever necessary.***
3) ***Figures to the right side indicates full marks.***
4) ***Assume sutiable data if necessary.***
5) ***Justify your answer with an example wherever necessary.***

Q1) a) Explain A star algrithm with an example. State the properties of A star algorithm. **[8]**

b) State and explain Hill Climbing algorithm. **[6]**

OR

Q2) a) Explain goal stack planning with an example of blocks world. **[8]**

b) Explain Constraint Satisfaction with N-Queens problem. **[6]**

Q3) a) Give Algorthm for Backtracking and look ahead Strategies of Constraint Satisfaction. **[8]**

b) Draw the architecture of an expert system. Explain each functional block in detail. **[6]**

OR

Q4) a) With an example explain Propositional and First Order Logic. **[8]**

b) State and explain PEAS for WUMPUS world problem. **[6]**

Q5) a) Explain all Stages in natural language processing with examples. **[8]**

b) What is Artifical Neural Network? Give two applications of artificial neural networks in detail. **[6]**

OR

Q6) a) Compare with the help of example Supervised, Unsupervised and Reinforcement learning. **[8]**

b) Explain machine translation using Natural Language Processing (NLP). **[6]**

P.T.O.

Q7) a) Draw and Explain Hybrid Control Architecture. **[8]**

b) Explain Non visual sensors like : contact sensors and Inertial sensors. **[6]**

OR

Q8) a) Explain Sensing and mapping for Point Robot. **[8]**

b) Write a short note on Human-Robot Interface. **[6]**

Q9) a) Explain in details laser Rangefinders and Biological Sensing. **[8]**

b) Explain Robot Pose Maintenance and Localization. **[6]**

OR

Q10)a) Write a short note on Topological Maps and Geometric Maps. **[8]**

b) Elaborate how robots can be used for mining automation. **[6]**

Total No. of Questions : 8]

SEAT No. :

PB-4947

[Total No. of Pages : 3

[6263]-620
B.E. (Computer Engineering)
DATA MINING AND WAREHOUSING
(2015 Pattern) (Semester - VII) (410244D)

Time : 2½ Hours] *[Max. Marks : 70*

Instructions to the candidates:

1) ***Solve Q.1 or Q.2, Q.3 or Q.4, Q.5 or Q.6 and Q.7 or Q.8.***
2) ***Neat diagrams must be drawn wherever necessary.***
3) ***Figures to the right indicates full marks.***
4) ***Assume suitable data, if necessary.***
5) ***Justify your answer with an example wherever necessary.***

Q1) a) Explain Knowledge discovery from data or KDD. **[4]**

b) Suppose that the data for analysis includes the attribute age. The age values for the data tuples are (in increasing order) 13, 15, 16, 16, 16, 17, 20, 22, 25, 25, 28, 30, 35, 40,42, 42, 45, 50, 52, 55, 60, 60, 62, 62, 65, 70 Partition them into three bins by each of the following methods. **[6]**

i) Equal-frequency partitioning

ii) Equal-width partitioning

Use smoothing by bin means to smooth the above data.

OR

Q2) a) List and explain data cleaning techniques. **[6]**

b) How to compute dissimilarity for categorical attributes with examples. **[4]**

Q3) a) Suppose that a data warehouse consists of the three dimensions time, doctor, and patient, and the two measures count and charge, where charge is the fee that a doctor charges a patient for a visit. Draw a schema diagram for the above data warehouse. **[6]**

b) Explain attribute subset selection techniques. **[4]**

OR

Q4) a) Explain following: **[6]**

i) Minskowski Distance

ii) Euclidean distance

b) Explain any two data reduction techniques. **[4]**

P.T.O

Q5) a) Explain the following terms: **[6]**

i) Constraint based rule mining

ii) Closed and maximal frequent itemsets

b) Explain FP growth algorithm with example. **[4]**

c) Consider an example with following set of transactions: **[6]**

TID	Items bought
T1	A, B, C
T2	A, B, C, D, E
T3	A, C, D
T4	A, C, D, E
T5	A, B, C, D

Assume that we wish to find the association rules with at least 40% support and 40% confidence. Find the frequent itemsets and then association rule using Apriori algorithm.

OR

Q6) a) Define support and confidence for an association rule. **[4]**

b) Consider the market basket transactions shown below: **[6]**

TID	Items bought
T1	{M, A, B, D}
T2	{A, D, C, B, F}
T3	{A, C, B, F}
T4	{A, B, D}

Assuming the minimum support of 50% and minimum confidence of 80%

i) Find all frequent itemsets using Apriori algorithm.

ii) Find all association rules using Apriori algorithm.

c) Explain mining Multilevel association rules. What is Uniform support? **[6]**

Q7) a) Explain the following: **[6]**

i) Gini index

ii) Gain ratio

iii) Information gain

b) Write and explain K-Nearest-Neighbour Classification algorithm with suitable example. **[8]**

c) What are Bayesian classifiers? **[4]**

OR

Q8) a) Define Classification and Prediction. Explain decision tree based Classification method with suitable example. **[8]**

b) Differentiate between Supervised and unsupervised Learning. **[6]**

c) Write short note on Rule Induction Using a Sequential Covering Algorithm. **[4]**

Q9) a) Explain following with example **[8]**

i) Accuracy

ii) Precision

iii) Recall

iv) Specificity

b) Describe following: **[8]**

i) Systematic learning

ii) Wholistic learning

OR

Q***10)*** a) Explain in detail following techniques to evaluate the accuracy of a Classifier : **[8]**

i) Random subsampling

ii) Cross validation

b) Describe following. **[8]**

i) Multiclass classification

ii) Reinforcement learning



Total No. of Questions : 8]

SEAT No. :

PB4948

[Total No. of Pages : 2

[6263]-621
B.E. (Computer Engineering)
INFORMATION AND CYBER SECURITY
(2015 Pattern) (Semester-VIII) (410251)

Time : 2½ Hours] *[Max. Marks : 70*

Instructions to the candidates:

1) ***Attempt Q.1 or Q.2, Q.3 or Q.4, Q.5 or Q.6, Q.7 or Q.8.***
2) ***Figures to the right indicate full marks.***
3) ***Neat, diagrams must be drawn wherever necessary.***
4) ***Assume Suitable data if necessary.***

Q1) a) Define information security. Enlist and explain the elements of information. **[8]**

b) Distinguish between Data Encryption Standard (DES) and Advance Encryption Standard(AES). **[6]**

c) Demonstrate the Deffie-Hellman Key Exchange in detail. **[6]**

OR

Q2) a) Define network security. Explain operational model of network security in detail. **[8]**

b) Distinguish between Asymmetric and Symmetric Encryption. **[6]**

c) Solve Diffie-Hellman problem. If p=7, q=17 select 1=6, b=4. Explain step by step. **[6]**

Q3) a) Enlist and explain protocols used in web security. **[8]**

b) Explain the working of SSL session and connection. **[8]**

OR

Q4) a) Distinguish between MIME and S/MIME. **[8]**

b) Explain AH and ESP protocol. **[8]**

Q5) a) What is computer firewall? Draw and explain Firewall architecture. **[9]**

b) Enlist and explain the limitations and challenges of intrusion detection system. **[8]**

OR

P.T.O.

Q6) a) What are the characteristics and types of firewall? Explain the need of Firewall. **[9]**

b) What is intrusion detection system and how does it work? **[8]**

Q7) a) What is cyber stalking? Describe levels of cyber stalking? **[9]**

b) Explain the concept of PII confidentiality safeguards. **[8]**

OR

Q8) a) What do you mean by personally identifiable information? Explain the use of PII in terms of confidentiality and cyber forensic. **[9]**

b) Write a short note on **[8]**

i) Information Protection Law

ii) Cyber Stalking



Total No. of Questions : 8]

SEAT No. :

PB-4949

[Total No. of Pages : 2

[6263]-622

B.E. (Computer)

EMBEDDED AND REAL TIME OPERATING SYSTEMS

(2015 Pattern) (Semester - VIII) (410252C)

Time : 2½ Hours] ***[Max. Marks : 70***

Instructions to the candidates:

1) ***Answer Q1 or Q2, Q3 or Q4, Q5 or Q6, Q7 or Q8.***
2) ***Neat diagrams must be drawn wherever necessary.***
3) ***Figures to the right side indicate full marks.***
4) ***Assume Suitable data if necessary.***

Q1) a) Explain Performance metrics for processor of embedded system? **[7]**

b) What is the use of ROM image in Embedded system? Draw a structure of ROM image and explain various components embedded inside it **[7]**

c) What are types of serial communication in embedded systems? **[6]**

OR

Q2) a) Explain timing diagram of Analog to Digital Converter (ADC)? **[7]**

b) Explain block diagram of Embedded systems? **[7]**

c) Explain ZigBee protocol in detail? **[6]**

Q3) a) Explain Hard versus soft real-time systems and their timing constraints? **[9]**

b) What are Functional parameters and Resource parameters of real-time process? **[8]**

OR

Q4) a) Explain Real-time task and task states with example? **[9]**

b) What are Approaches to real-time scheduling? **[8]**

P.T.O.

Q5) a) How to Enforcing mutual exclusion and critical sections in embedded systems? **[9]**

b) What are Effects of resource contention and resource access control? **[8]**

OR

Q6) a) Explain Inter-process communication in RTOS? **[9]**

b) What are Interrupt routines in RTOS environment? **[8]**

Q7) a) Explain synchronization in Real-time Operating system? **[8]**

b) What are different Medium access-control protocols for broadcast networks? **[8]**

OR

Q8) a) Explain Software development process for embedded system? **[8]**

b) What are Embedded software development tools/ **[8]**

⌘⌘⌘

Total No. of Questions : 10]

SEAT No. :

PB4950

[Total No. of Pages : 2

[6263]-623
B.E. (Mechanical) (Honours)
SOFT COMPUTING AND DEEP LEARNING
(2015 Pattern) (Semester -VIII) (410303)

Time :2½ Hours] *[Max. Marks :70*

Instructions to the candidates:

1) ***Solve Q.1or Q.2, Q.3 or Q.4, Q.5 or Q.6, Q.7 or Q.8, Q.9 or Q.10.***
2) ***Assume sutiable data, if necessary.***
3) ***Neat diagrams must be drawn whenever necessary.***
4) ***Figures to the right indicates full marks.***

Q1) a) Define the following for membership functions: **[3]**

i) Core

ii) Support

iii) Boundary

b) Explain fuzzification and defuzzification techiques. **[6]**

OR

Q2) a) Differentiate Supervised Learning and Unsupervised Learning. **[3]**

b) What is Pooling? What are the different types of Pooling? Explain their characteristics. **[6]**

Q3) a) Explain in detail convergence working principle in genetic algorithm. **[3]**

b) What is soft computing? Indicate biological analogies of basic techniques of soft computing. Describe why soft computing is particularly useful in representing and reasoning with human oriented knowledge. **[6]**

OR

Q4) a) Explain in detail Mamdani Fuzzy Inference System FIS. **[3]**

b) What is genetic programming? Write and explain the executional steps of Genetic Programming. **[6]**

Q5) a) Explain working of Bayesian Neural Networks with suitable diagram. **[6]**

b) What do you mean by Tensor in TensorFlow? What are the Programming element of TensorFlow. **[6]**

c) Explain in detail Feed Forward Neural Network. **[4]**

OR

P.T.O.

Q6) a) What is a Deep Belief Network? How did Deep Belief Neural Networks Evolve? **[6]**

b) What is Neural Network? Explain with suitable diagram the different classes of network architecture. **[6]**

c) Explain the following terms: **[4]**

i) Theano in Deep Learning.

ii) Caffe in Deep Learning.

Q7) a) What is the role of the Activation functions in Neural Networks? Explain in detail some of the popular Activation Functions used in Neural Networks. **[8]**

b) Explain in detail various Open Source Deep Learning Libraries and Platforms. **[6]**

c) What do you mean by Perceptron? Explain in detail different types of Perceptrons? **[4]**

OR

Q8) a) Explain with example Self Organizing Maps. **[8]**

b) Define Crisp and Fuzzy relation. Describe fuzzy max-min composition, fuzzy min-max composition and max-product composition. **[6]**

c) What is image captioning in Deep Learning? **[4]**

Q9) a) What is associate memory in neural network? Explain various types and application of associative memory. **[8]**

b) Explain in detail architecture Convolution Neural Network (CNN). Write down various properties of CNN representations. **[6]**

c) Explain Adaptive Resonance Theory? What is the major difference between ART1 and ART2 **[4]**

OR

Q10)a) Explain following with example: **[8]**

i) Sequential processing LSTM

ii) Recurrent Neural Network (RNN)

b) Write short note on: **[6]**

i) Artifical Neural Network(ANN)

ii) Application of RNN

c) Explain on detail Architecture of Back Propagation (BP) Networks. **[4]**

Total No. of Questions : 8]

SEAT No. :

PB4951

[Total No. of Pages : 2

[6263]-624

B.E. (Electronics & Telecommunication)(Honors)

INTERNET OF THINGS SECURITY

(2015 Pattern) (Semester -VIII) (411703)

Time :2½ Hours] *[Max. Marks :70*

Instructions to the candidates:

1) ***Attempt Q.1or Q.2, Q.3 or Q.4, Q.5 or Q.6, Q.7 or Q.8.***
2) ***Figures to the right indicates full marks.***
3) ***Neat diagrams must be drawn wherever necessary.***
4) ***Assume suitable data if necessary.***

Q1) a) Explain security requirements in IoT with a diagram. **[6]**

b) Draw and explain basic structure of physical layer security at IoT devices. Write any 4 physical layer security features. **[7]**

c) State key limitations faced by IoT end-nodes in an IoT environment and explain five basic security goals in IoT. **[7]**

OR

Q2) a) Explain insufficient authentication/authorization. **[6]**

b) Explain Transport Encryption with the help of Transport Layer Security (TLS) and Secure Sockets Layer(SSL). **[7]**

c) What is the authentication process in IoT? Explain public-key-based authentication. **[7]**

Q3) a) Write a short note on Application-Interface Layer. **[5]**

b) Draw security architecture for IoT and explain security challenges in IoT environment. **[6]**

c) State and explain security requirements in network layer. **[6]**

OR

Q4) a) Write a short note on Cross-Layer Threats. **[5]**

b) State and explain security requirements in service layer. **[6]**

c) Explain IoT Security for machine learning applications. **[6]**

P.T.O.

Q5) a) Write a short note on Security Protocols and Privacy Issues into 6LoWPAN Stack. **[5]**

b) Explain security in integration of WSN and RFID. What are different challenges in the integration? **[6]**

c) Discuss Security Concerns in any one Social IoT based application. **[6]**

OR

Q6) a) Write a short note on Security in Service Management. **[5]**

b) How to maintain confidentiality and security for IoT based healthcare applications. **[6]**

c) What are the threats and challenges to achieve security in the identification and tracking technologies of the IoT Environment. **[6]**

Q7) a) Discuss the case study - Smart Home. **[5]**

b) How to provide security in connected cars. **[5]**

c) Describe in detail blockchain enabled food supply chain traceability system in detail. **[6]**

OR

Q8) a) Discuss the case study- Food supply chain traceability system. **[5]**

b) Discuss how Blockchain Technology is used to provide the Security and Privacy in IoT? **[5]**

c) State and explain the challenges associated with secure IoT deployment and blockchain in IoT. **[6]**

Total No. of Questions : 10]

SEAT No. :

PB-4964

[Total No. of Pages : 2

[6263]-625

B.E. (Mechanical)

REFRIGERATION & AIR CONDITIONING

(2012 Pattern) (Semester - VII) (402041)

Time : 2½ Hours] *[Max. Marks : 70*

Instructions to the candidates:

1) ***Answer Q1 or Q2, Q3 or Q4, Q5, or Q6, Q7, or Q8 and Q9 or Q10.***
2) ***Neat diagrams must be drawn wherever necessary.***
3) ***Figures to the right side indicate full marks.***
4) ***Use of electronic pocket calculator is allowed.***
5) ***Use of steam table and psychometric chart is allowed***

Q1) a) State the requirements of air conditioning in Multiplex and Hospital. **[6]**

b) List the desirable Thermodynamic and Chemical properties of refrigerant. **[4]**

OR

Q2) a) Draw and explain in detail actual Vapour compression Refrigeration cycle on p-h and T-S diagrams. **[6]**

b) Explain the term EER, SEER. **[4]**

Q3) a) Draw schematic and p-h diagram for a Cascade refrigeration system. **[6]**

b) Name the commonly used multipressure systems. **[4]**

OR

Q4) a) Vapour compression refrigeration system works between the pressures of 4.98 bar and 1.86 bar. The vapour is superheated at the end of compression, its temperature being 25°C. The liquid is sub cooled to 9°C before throttling. The Vapour is 95% dry before compression. Using the data given below find COP of refrigerator. The specific heat at constant pressure for superheated vapour is 0.65 kJ/kgK and for liquid is 0.97 kJ/kgK. **[6]**

P bar	T °C	hf(KJ/Kg)	hg(KJ/kg)
4.98	14.45	49.22	148.3
1.86	–15	21.74	162

b) Write a short note on applications of cryogenics. **[4]**

P.T.O.

Q5) a) Explain Humidification and dehumidification of air with neat diagram. **[10]**

b) Explain the terms: (i) GRSHF (ii) BPF (iii) ERSHF **[6]**

OR

Q6) a) Explain ASHRAE comfort chart showing the comfort zone for winter and summer. **[10]**

b) What is cooling load? Explain factors contributing cooling load. **[6]**

Q7) a) Explain with neat sketch winter Air conditioning system. **[6]**

b) Draw neat diagram of TXV and explain its working. **[6]**

c) Explain working of flooded typt evaporator with neat sketch. **[6]**

OR

Q8) a) Explain with neat sketch central Air conditioning system. **[6]**

b) Write a note on "All water system". **[6]**

c) State the factors tobe considered while selecting a system of air conditioning. **[6]**

Q9) a) Write down the methods of duct design? Explain static regain method in detail. **[6]**

b) A rectangular duct section of 500mm × 350mm size carries 75m^3/min of air having density 1.1 5kg/m^3. Determine equivalent diameter of circular duct if **[6]**

i) The quantity of air carried in both the cases is same and

ii) Air velocity is same, If f = 0.001 for sheet metal, find the pressure loss per 100m length of duct.

c) Write a note on Fan Law. **[4]**

OR

Q10)a) Explain Air Handling Unit (AHU) with neat sketch. **[6]**

b) Calculate the frictional drop through 40m of 30*50 cms rectangular duct for 100 m^3 of air per minute at a density of 1.2 kg/m^3. Assume friction factor of 0.005. **[6]**

c) Define the following terms: outlet, register. **[4]**

❍❍❍❍

Total No. of Questions : 10]

SEAT No. :

PB-4965

[Total No. of Pages : 3

[6263]-626
B.E. (Mechanical)
POWER PLANT ENGINEERING
(2012 Pattern) (Semester - II) (402047)

Time : 2½ Hours] ***[Max. Marks : 70***

Instructions to the candidates:

1) ***Answer Q1 or Q2, Q3 or Q4, Q5 or Q6, Q7or Q8 Q9 or Q10.***
2) ***Draw neat diagrams wherever necessary***
3) ***Use of scientific calculator is allowed***
4) ***Use of Steam Table and Mollier Chart is allowed***
5) ***Assume suitable data wherever necessary***
6) ***Figures to the right indicate full marks***

Q1) a) Explain **[4]**

i) Carbon credit

ii) Load shedding

b) With neat sketch explain ash handling system. **[6]**

OR

Q2) a) Discuss the present scenario of power generation in India. **[5]**

b) Give layout of unit system of pulverized fuel burning. List its advantages & disadvantages. **[5]**

Q3) a) Discuss the parameters required for site selection of Hydroelectric Power Plant. **[4]**

b) The steam at 70 bar and 500°C is supplied to the system turbine. Steam is expanded in high pressure turbine isentropically till it is dry saturated. The steam is reheated to 400°C passing to reheater. Expansion after reheating is carried to condenser pressure up to 0.2 bar. Find efficiency of cycle and work output if flow of steam is 10 kg/sec. **[6]**

Neglect pump work. Represent cycle on T-S plot and Find

i) Thermal efficiency of cycle

ii) Work ratio

OR

P.T.O

Q4) a) Define vacuum efficiency applied to condenser? State the effects of air leakage on the performance of a condenser. **[4]**

b) What are the function of moderators, control rods and cool ants in a nuclear power plant. **[6]**

Q5) a) Derive the equation of thermal efficiency of Brayton cycle. **[6]**

b) In an open cycle gas turbine power plant compressor is driven by the high pressure turbine. Power is produced by the low pressure turbine. The exhaust gases are passed through the regenerator. Using the following data determine the air flow rate for 2 MW power produced and thermal efficiency of the plant. **[10]**

Data:

Isentropic efficiency of compressor and turbine : 88%

Compressor inlet conditions : 27°C and 1 bar

Pressure ratio : 7

Regenerator effectiveness : 0.8

Maximum Temperature in the cycle : 900°C

Assume air flow rate to be equal to the gas flow rate, specific heat to air and gases as

1.005 and 1.128 kJ/kgK, γ for air and gas as 1.4 and 1.34 respectively.

OR

Q6) a) What are the basic requirements for locating a wind power plant? Which factor affects the size of wind power plant. **[8]**

b) Explain with neat sketch Hybrid and Tidal Power Plant. **[8]**

Q7) a) What is function of PV system? What are advantages and disadvantages? **[8]**

b) What is OTEC? What is the minimum requirement to operate OTEC. Explain close cycle OTEC with schematic diagram. **[8]**

OR

Q8) a) With neat sketch explain the working of a fuel cell and list out its advantages over other nonconventional systems. **[8]**

b) What are the concentrating type of collector systems? Discuss their advantages. **[8]**

Q9) a) What are green house gases and green house effect? Explain its effect on global warming. How we can control greenhouse gases emissions? **[9]**

b) What are the different types of relay. What is its function? With neat sketch explain any two types of relays used in power plant. **[9]**

OR

Q10) a) What is switch gear? What are its functions? Explain different types of switch gear installation. **[9]**

b) Discuss the various methods in brief to control pollutants of power plants and explain one method adopted to control Nuclear pollution. **[9]**



Total No. of Questions : 10]

SEAT No. :

PB-4966

[Total No. of Pages : 4

[6263]-627

B.E. (Mechanical)

MECHANICAL SYSTEM DESIGN

(2015 Pattern) (402048)

Time : 2½ Hours] *[Max. Marks : 70*

Instructions to the candidates:

1) ***Answer Q1 or Q2, Q3 or Q4, Q5 or Q6, Q7 or Q8 and Q9 or Q10.***
2) ***Neat diagrams must be drawn wherever necessary.***
3) ***Figures to the right side indicate full marks.***
4) ***Assume Suitable data if necessary.***

Q1) a) What is structural formula Explain the procedure to construct the structural diagram for machine tool gear box. Draw structural diagram for following structural formulae 3(2) 2(1). **[6]**

b) Explain design and natural tolerances. **[4]**

OR

Q2) a) Why there is necessity of machine tool gear box for machine tool. Compare Structural Diagram & Speed Diagram. **[6]**

b) Two populations X and Y added together. Derive the expression to find mean of the resultant population. **[4]**

Q3) A belt conveyor is to be designed to carry the bulk material at the rate of 300×10^3 Kg/hr with following details, **[10]**

Density of bulk material = 800 Kg/m^3

Angle of repose of bulk material = 150

Belt speed = 10 Km/hr

Material factor for plies, $K_1 = 2.0$

Belt tension and arc of contact factor, $K_2 = 63$

No. of plies for the belt = 4

Determine :

a) The Suitable width of belt

b) The Diameter and length of drive pulley

OR

P.T.O.

Q4) a) A horizontal belt conveyor is used for transporting the bulk material having mass density of 11772 N/m^3. The surcharge factor C for the flat belt is 0.2 while the belt width is 700 mm. If the belt speed is 1.75 m/s. determine the capacity of conveyor. **[6]**

b) Explain the need of idlers in belt conveyors, also draw different types of idlers used in belt conveyors. **[4]**

Q5) a) Explain with the help of neat sketches different types of formed heads used as end closures in cylindrical pressure vessels. **[8]**

b) A seamless cylinder of storage capacity 0.025 m^3 and made of alloy steel 20Mo55 (Sut = 500 N/mm^2) is to be used to store a fluid at 15 MPa gauge pressure. The length of the cylinder is twice its inner diameter. If the factor of safety is 2, determine the cylinder dimensions. **[10]**

OR

Q6) a) What is auto-frettage? Describe any one method of pre-stressing the cylinders with neat sketch. **[8]**

b) A cylindrical pressure vessel with 1500mm inside diameter and 150mm thickness is subjected to internal pressure of 1.5 N/mm^2. A nozzle of 300 mm inside diameter and 12 mm thickness is to be provided in the shell. Welds joints efficiency for shell as well as nozzle is 85 % , while corrosion allowance is 2 mm. The nozzle projects 20 mm outside and 30 mm inside the shell. If the allowable tensile stress for the shell and nozzle material is 120 N/mm^2, determine whether the reinforcing is adequate, if not find the dimensions of reinforcing pad, if the plate thickness is 150 mm. **[10]**

Q7) a) Explain the stresses developed in the cylinder wall. **[6]**

b) Following data is given for piston of four stroke diesel engine : **[10]**

1) Cylinder bore = 250 mm;
2) Maximum gas pressure = 4 N/mm^2;
3) Bearing pressure = 15 N/mm^2,
4) Length of piston pin in bush of small end = 0.45 D;
5) Ratio of inner to outer diameter of piston pin = 0.6;
6) Mean diameter of piston boss = 1.4x Outer diameter of piston pin;
7) Allowable bending stress of piston pin = 84 N/mm^2

Calculate :

i) the outer diameter of piston pin;
ii) the inner diameter of piston pin;
iii) the mean diameter of piston boss
iv) check design for bending stress

OR

Q8) The following data refers to a four stroke diesel engine : **[16]**

a) Cylinder bore = 250 mm,

b) Piston stroke = 300 mm,

c) Speed = 600 rpm,

d) Indicated mean effective pressure = 0.6 N/mm^2,

e) Maximum gas pressure = 4 N/mm^2,

f) Brake specific fuel consumption = 0.25 kg/kW –h

g) Higher calorific value of fuel = 44,000 kJ/kg

h) Mechanical efficiency = 80%.

Assume that 5% of total heat developed in the cylinder is transmitted by the piston. The piston is made of gray cast iron FG200 (Sut = 200 N/mm^2 and K = 46.6 W/m°C) and the factor of safety is 5. The temperature difference between the center and the edge of the piston head is 220°C

i) Determine the thickness of the piston head by strength consideration and thermal consideration.

ii) State whether a cup is required in the top of piston head, If so calculate the radius of the cup.

Q9) a) Explain the Johnsons method of optimum design. **[6]**

b) A tensile bar of length 400 mm is subjected to constant tensile force of 4000 N. If the factor of safety is 2 design the bar with the objective of minimizing the material cost out of the following materials. **[10]**

Material	Mass density, p (Kg/m^3)	Material Cost, C (Rs/N)	Yield Strength Syt (MPa)
Plain carbon steel	7800	28	400
Alloy steel	7850	150	900
Al alloy	2800	140	150
Titanium alloy	4500	2200	800

OR

Q10) A shaft is to be used to transmit a torque of 900 N-m. The required torsional stiffness is 90 N-m /degree while the factor of safety based on yield strength is 1.5. Using maximum shear stress theory, design the shaft with the objective of minimizing the weight. What will be the change in design for minimum cost? **[16]**

Material	Mass Density p. kg/mm^3	Modulus of rigidity G, (GPa)	Yield strength Syt, MPa	Material Cost, C (Rs/N)
MAT1	8500	80	130	16
MAT2	3000	26.5	50	32
MAT3	4800	40	90	480
MAT4	2100	16	20	32

⌘⌘⌘