Total No. of Questions : 8] **SEAT No. :**

P9367 **[Total No. of Pages : 4**

[6178]-5001
F.E.
ENGINEERING MATHEMATICS - I
(2015 Pattern) (Semester - I & II) (Credit System) (107001)

Time : 2 Hours] ***[Max. Marks : 50***

Instructions to the candidates:

1) ***Solve Q.1 or Q.2, Q.3 or Q.4, Q.5 or Q.6, Q.7 or Q.8.***
2) ***Figures to the right indicate full marks.***
3) ***Use of electronic pocket calculator allowed.***
4) ***Assume, suitable data, if necessary.***

Q1) a) Examine consistency of following system: **[4]**

$x+y+z = 1$

$x+2y+4z = 2$

$x+4y+10z = 5$

b) Find eigenvalues and eigenvector corresponding to smallest eigenvalue of **[4]**

$$A = \begin{bmatrix} 3 & 1 & 4 \\ 0 & 2 & 6 \\ 0 & 0 & 5 \end{bmatrix}$$

c) If $\sin(\alpha + i\beta) = x + iy$, then Prove that **[4]**

i) $$\frac{x^2}{\cosh^2\beta} + \frac{y^2}{\sinh^2\beta} = 1$$

ii) $$\frac{x^2}{\sin^2\alpha} - \frac{y^2}{\cos^2\alpha} = 1$$

OR

Q2) a) Solve : $x^4 - x^3 + x^2 - x + 1 = 0$ **[4]**

b) Prove that real part of the principal value of $i^{\log(1+i)}$ is $e^{-\frac{\pi^2}{8}} \cos\left(\frac{\pi}{4}\log^2\right)$ **[4]**

c) Examine linear dependance or Independance of following system of vectors $X_1 = (2\ 2\ 1)^T$, $X_2 = (1\ 3\ 1)^T$, $X_3 = (1\ 2\ 2)^T$ **[4]**

P.T.O.

Q3) a) Solve any one :- **[4]**

i) Test the convergence of the series:

$$\frac{2}{1}+\frac{3}{8}+\frac{4}{27}+\frac{5}{64}+.....+\frac{n+1}{n^3}+.....$$

ii) Test the convergence of the Series:

$$\sum\frac{n^2}{n!}$$

b) Expand x^3+7x^2+x-6 in powers of $(x-3)$ **[4]**

c) Find n^{th} derivative of **[4]**

$$y=\sin^{-1}\left(\frac{2x}{1+x^2}\right)$$

OR

Q4) a) Solve any one : **[4]**

i) $\lim_{x\to 0}\frac{e^{ax}-e^{-ax}}{\log(1+bx)}$

ii) $\lim_{x\to 0}(\cos x)^{\cot x}$

b) Prove that $e^x\cos x=1+x-\frac{x^3}{3}.....$ **[4]**

c) If $y = e^{\tan^{-1}x}$, then prove that **[4]**
$(1+x^2)y_{n+2}+[2(n+1)x-1]y_{n+1}+n(n+1)y_n = 0$

Q5) Solve any two :

a) If $u=2x+2y$, $v=2x-2y$ **[6]**
Prove that

i) $\left(\frac{\partial y}{\partial v}\right)_x\left(\frac{\partial v}{\partial y}\right)_u=2$

ii) $\left(\frac{\partial u}{\partial x}\right)_y\left(\frac{\partial x}{\partial u}\right)_v=\frac{1}{2}$

b) If $u = \frac{x^4 + y^4}{x^2 - y^2}$ then by Euler's theorem and deductions prove **[7]**

i) $x\frac{\partial u}{\partial x} + y\frac{\partial u}{\partial y} = 2u$

ii) $x^2\frac{\partial^2 u}{\partial x^2} + 2xy\frac{\partial^2 u}{\partial x \partial y} + y^2\frac{\partial^2 u}{\partial y^2} = 2u$

c) If z=f (x,y) where x=u+v, y=uv then prove that **[6]**

$$u\frac{\partial z}{\partial u} + v\frac{\partial z}{\partial v} = x\frac{\partial z}{\partial x} + 2y\frac{\partial z}{\partial y}$$

OR

Q6) Solve any two :

a) If z = log (x+y) + 2 log (x–y) Prove that $\frac{\partial^2 u}{\partial x^2} = \frac{\partial^2 u}{\partial y^2}$ **[6]**

b) If $u = \sin^{-1}\left(x^4 + y^4\right)$ then by using deduction from Euler's theorem prove that **[7]**

$$x^2\frac{\partial^2 u}{\partial x^2} + 2xy\frac{\partial^2 u}{\partial x \partial y} + y^2\frac{\partial^2 u}{\partial y^2} = 4 \tan u\,[4\sec^2 u - 1]$$

c) If u = f (r,s) and r = x^2+y^2 and s = x^2–y^2 then prove that **[6]**

$$y\frac{\partial u}{\partial x} + x\frac{\partial u}{\partial y} = 4xy\frac{\partial u}{\partial r}$$

Q7) a) If x = uv, $y = \frac{u+v}{u-v}$, Find $\frac{\partial(u,v)}{\partial(x,y)}$. **[4]**

b) Examine whether the following functions are functionally dependent. If so, Find the relation between them. $u = \frac{x-y}{1+xy}$, v = $\tan^{-1}$x–$\tan^{-1}$y **[4]**

c) Discuss the maxima and minima of the function x^3+y^3–3axy,a>0.**[5]**

OR

Q8) a) If u=x+y and v = x^2+y^2, **[4]**

Find $\frac{\partial x}{\partial u}$

b) In calculating the volume of a right circular cone using the formula $v = \frac{1}{3}\pi r^2 h$, errors of 2% and 1% are made in measuring the height and radius of base respectively. Find the percentage error in calculating the volume. **[4]**

c) Find the points on the surface $Z^2 = xy+1$ nearest to the origin. **[5]**

Total No. of Questions : 8]

SEAT No. :

P9368

[Total No. of Pages : 2

[6178]-5002
F.E. (Computer Engineering)
ENGINEERING CHEMISTRY
(2015 Pattern) (Credit System) (Semester - I & II) (107009)

Time : 2 Hours] *[Max. Marks : 50*

Instructions to the candidates:

1) ***Attempt Q.1 or Q.2, Q.3 or Q.4, Q.5 or Q.6, Q.7 or Q.8.***
2) ***Neat diagrams must be drawn wherever necessary.***
3) ***Assume suitable data if necessary.***
4) ***Figures to the right indicate full marks.***

Q1) a) Define total hardness, permanent hardness and temporary hardness. Explain Reverse Osmosis method for desalination of brackish water. **[6]**

b) Explain conductometric titration between strong acid & weak base with titration curve. **[3]**

c) Define with suitable example : Chromophore & Bathochromic shift. **[3]**

OR

Q2) a) Explain instrumentation of UV-Visible spectro-photometer with schematic diagram. **[6]**

b) Write any 3 disadvantages of Adipic acid by traditional method & any 3 advantages of Adipic acid by green synthesis method. **[3]**

c) 100 ml of alkaline water when tirated against 0.02 N H_2SO_4, phenolphthalein end point obtained at 10ml addition of acid while at 20ml methyl orange end point was obtained. Identify type of alkalinity & determine its extent. **[3]**

Q3) a) Write synthesis, properties (any 2) & applications (any 2) of Epoxy Resin & SBR. **[6]**

b) What is power alcohol? Give its synthesis & any 2 advantages. **[3]**

c) 0.75 gm of coal in kjeldahl's experiment liberated ammonia which was absorbed in 50ml 0.1 N H_2SO_4. The resultant solution required 4ml of 0.1N NaoH for complete neutralisation. Calculate % of N in coal. **[3]**

OR

P.T.O.

Q4) a) Mention criteria for selecting a good fuel. **[6]**

b) Distinguish between thermosoftening and thermosetting polymers. **[3]**

c) Define (Tg) glass transition temperature & explain any 2 factors affecting Tg value of polymer. **[3]**

Q5) a) Give isotopes of hydrogen with one application of each isotope & explain industrial production of hydrogen gas by steam reforming of coke with reaction. **[5]**

b) Discuss structure, properties (any 2) & applications (any 2) of graphite. **[4]**

c) Discuss any 2 properties of hydrogen gas which makes it more difficult to store & transport. **[4]**

OR

Q6) a) Explain structure, properties (any 4) & applications (any 2) of fullerence. **[5]**

b) Explain chemical storage method of hydrogen gas in the form of alanates. **[4]**

c) What are the types of SWCNT. with respect to their structure? Give any 2 applications of CNTs. **[4]**

Q7) a) Define corrosion. Explain electrochemical corrosion by hydrogen evolution. **[5]**

b) Define Anodic coating & Cathodic coating. Which is better & why? **[4]**

c) Define electroplating. Explain electroplating with neat labelled diagram. **[4]**

OR

Q8) a) Discuss factors affecting rate of corrosion with respect to metal. **[5]**

b) Explain galvanic corrosion with suitable example. **[4]**

c) What is principle of cathodic protection? Explain any one method of cathodic protection. **[4]**

Total No. of Questions : 8]

SEAT No. : ____

P9369

[Total No. of Pages : 3

[6178]-5003

F.E.

ENGINEERING PHYSICS

(2015 Pattern) (Credit System) (Semester - I & II) (107002)

Time : 2 Hours] ***[Max. Marks : 50***

Instructions to the candidates:

1) ***Solve Q1 or Q2, Q3 or Q4, Q5 or Q6, Q7 or Q8.***
2) ***Neat diagrams must be drawn wherever necessary.***
3) ***Figures to the right indicate full marks.***
4) ***Use of logarithmic tables slide rule, Mollier charts, electronic pocket calculator and steam tables is allowed.***

Q1) a) What is diffraction grating? For a plane transmission grating, starting from equation of resultant amplitude and intensity, specify the terms involved. Derive condition of maxima and minima of diffraction pattern. **[6]**

b) Calculate the intensity level of a fighter plane just leaving the runway having a sound intensity of about $100 W/m^2$ (Given : Threshold intensity (Io) = 10^{-4} W/m^2. **[3]**

c) List any three applications of ultrasonic. Explain any one of them in brief. **[3]**

OR

Q2) a) Light is incident on a quartz crystal plate at normal incidence. Explain with suitable diagram the propagation of light in following codes, when optic axis is lying in the plane of incidence and 1s **[6]**

i) Parallel to the crystal surface.

ii) Perpendicular to the crystal surface.

iii) Inclined to the crystal surface.

b) Calculate the natural frequency of vibration for a quartz plate of thickness 5.5 mm.

($\gamma = 8 \times 10^{10}$ N/m^2 and $\rho = 2650$ kg/m^3) **[3]**

c) Explain with suitable diagram how the principle of interference is used to test optical flatness of surface. **[3]**

P.T.O.

Q3) a) Explain construction and working of Ruby Laser. **[6]**

b) What is Fermi energy level? Write the formula for the Fermi Dirac probability distribution function. **[3]**

c) Write four applications of solar cell. **[3]**

OR

Q4) a) What is photovoltaic effect? Explain the construction and working of solar cell. Also draw the I-V characteristics of solar cell and define fill factor. **[6]**

b) Calculate the conductivity of Ge sample, if the donor impurity is added to an extent of one part in 10^8 Ge atoms at room temperature. Data given: Na = 60.23×10^{23} atoms/gm - mole, At. Wt. of Ge = 72.6, D = 5.32 gm/CC, μ = 3800 cm^2/V-s, e = 1.6×10^{-19} C. **[3]**

c) What is holography? Explain the reconstruction process in holography technique. **[3]**

Q5) a) Derive expression for energy and wave function of a particle enclosed in an infinite potential well. **[6]**

b) State De-Broglie hypothesis of matter waves. Derive an expression for matter waves for accelerating particle in terms of kinetic energy. **[4]**

c) In a TV set electrons are accelerated by a potential difference of 10 kv. Calculate the De-Broglie wavelength of mutter waves associated with these electrons. **[3]**

OR

Q6) a) Derive Schrodinger's time independent wave equation. **[6]**

b) Explain wave function. Give physical significance of $|\psi^2|$. **[4]**

c) An electron is bound by potential which closely approaches an infinite square well of width 2.5 Å calculate the lowest three possible energy in electron volts the electron can have. **[3]**

Q7) a) Explain chemical method for synthesis of nanoparticles by colloidal route with the help of LaMer diagrams. Give one example of synthesis of metal nanoparticles. **[6]**

b) Explain formation of cooper pairs in superconductors with the help of electron phonon interaction. **[4]**

c) Critical temperature of superconductors with isotopic mass equal to zero is $5^{o}K$. Calculate the critical temperature of the superconductors when isotopic mass = 196. **[3]**

OR

Q8) a) What is superconductivity? Explain Meissner effect and show that superconductors are perfectly diamagnetic. **[6]**

b) Explain the following terms of super conductivity **[4]**

i) Critical magnetic field

ii) Persistent current

c) Explain any three applications of Nano technology. **[3]**



Total No. of Questions : 8]

SEAT No. : ____

P9370

[Total No. of Pages : 2

[6178]-5004

F.E.

BASIC ELECTRONICS ENGINEERING

(2015 Pattern) (Credit System) (Semester - I&II) (104012)

Time : 2 Hours] ***[Max. Marks : 50***

Instructions to the candidates:

1) ***Attempt Q1 or Q2, Q3 or Q4, Q5 or Q6, Q7 or Q8.***
2) ***Figures to the right indicates full marks.***
3) ***Neat diagrams must be draw wherever necessary.***
4) ***Use of electronic pocket calculator is allowed.***
5) ***Assume suitable data, if necessary.***

Q1) a) Compare Half wave rectifier & full wave rectifiers. **[6]**

b) Draw Drain and Transfer characteristics of N-Channel E-MOSFET. Show different regions of operations. **[6]**

OR

Q2) a) Draw and explain construction & working principle of Photodiode. Write its two applications. **[6]**

b) Compare BJT in CB, CE and CC Configurations. **[6]**

Q3) a) Define following parameters of OP-AMP. **[6]**

i) Slew Rate

ii) CMRR

iii) PSRR

Give its Ideal & Practical values for IC 741.

b) State and Prove De-Morgan's theorem. **[6]**

OR

Q4) a) Draw and explain circuit diagram of Astable Multivibrator using IC 555. **[6]**

b) Design & Implement Full adder using logic gates, truth table and give the equations For sum & Carry. **[6]**

P.T.O.

Q5) a) What are the different types of Temperature transducers. Explain construction & working principle of Thermocouple with its applications. **[7]**

b) Compare Active Sensors and Passive Sensors. **[6]**

OR

Q6) a) Define Transducers. Explain with neat diagram the Construction & working of LVDT. Also mention its two applications. **[7]**

b) Write a short note on selection criteria of transducers. **[6]**

Q7) a) Define Frequency Modulation (FM). Also explain following terms w.r.t to FM. **[7]**

i) Frequency Deviation

ii) Modulation index

iii) Advantages & disadvantages

b) Compare the Twisted Pair cable, Coaxial cable and fiber optic cable. **[6]**

OR

Q8) a) Draw and explain the block diagram of GSM Communication systems. **[7]**

b) Draw and explain block diagram of electronic communication systems. **[6]**

❄ ❄ ❄

Total No. of Questions : 8]

SEAT No. : ____

P9371

[Total No. of Pages : 4

[6178]-5005
F.E.
BASIC ELECTRICAL ENGINEERING
(2015 Pattern) (Credit System) (Semester - I & II) (103004)

Time : 2 Hours] ***[Max. Marks : 50***

Instructions to the candidates:

1) ***Answer Q.1 or Q.2, Q.3 or Q.4, Q.5 or Q.6, Q.7 or Q.8.***
2) ***Neat Diagrams must be drawn wherever necessary.***
3) ***Figures to the right indicate full marks.***
4) ***Use of Non-Programmable Scientific Calculators is allowed.***
5) ***Assume Suitable Data if necessary.***

Q1) a) Obtain the expression for insulation resistance of the single core cable. Draw the necessary diagram. **[6]**

b) A coil of 500 turns is uniformly wound on iron ring having mean circumference 50 cm and area of cross section 4 sq.cm. The relative permeability of iron is 1500. When the coil carry the current of 3A, find

i) MMF

ii) Reluctance

iii) flux

iv) If an air gap of 2mm is cut in it, calculate the new value of reluctance and flux **[7]**

OR

Q2) a) Obtain the expression for dynamically induced emf. **[6]**

b) If the conductor resistance at 20 °C is 40 Ω and temperature coefficient of resistance is 0.00393 per degree Celsius at 20 °C. Find

i) resistance at 50 °C and

ii) at what temperature, the resistance of the conductor would be 48 Ω. **[7]**

P.T.O.

Q3) a) Obtain the expression for average value of alternating current in terms of its peak value. **[6]**

b) Sketch the curve for voltage across the charging capacitor and charging current. Also write down the expression for **[6]**

i) voltage across the capacitor

ii) charging current

iii) time constant

iv) initial charging current

OR

Q4) a) 2 kVA, 1000/250 V, 1-ph 50 Hz transformer has emf per turn = 10 V. Find **[6]**

i) number of turns on primary side

ii) number of turns on secondary side

iii) primary full load current

iv) secondary full load current

b) Convert rectangular to polar *OR* polar to rectangular form **[6]**

i) Z = 6-j8

ii) Z = 5+j 10

iii) Z = 5 < - 53.13°

Q5) a) Obtain the expression for power, when voltage $v = V_m \sin \omega t$ is applied across R-C series circuit. Draw the circuit diagram and phasor diagram.**[6]**

b) State the relation between **[6]**

i) phase voltage and line voltage

ii) phase current and line current incase of balanced star connected 3-ph load. Using above relations, obtain the expressions for 3-ph active power and 3-ph reactive power.

OR

Q6) a) Three identical impedances each of 6+j8 Ω are conncted in star across 3-ph, 400 V ac supply. Determine **[6]**

i) Line voltage

ii) phase voltage

iii) phase current and line current

iv) 3-ph active power

b) The series circuit having resistance 10 Ω and inductance 0.1H is connected to 1-phase, 240 V, 50 Hz AC supply. Calculate- **[6]**

i) inductive reactance X_L

ii) impedance

iii) current drawn by the circuit

iv) power factor

v) Active power and

vi) reactive power

Q7) a) State and explain Kirchhoff's laws. **[6]**

b) Find equivalent resistance between AB for the circuit shown in fig. 7.b.**[7]**

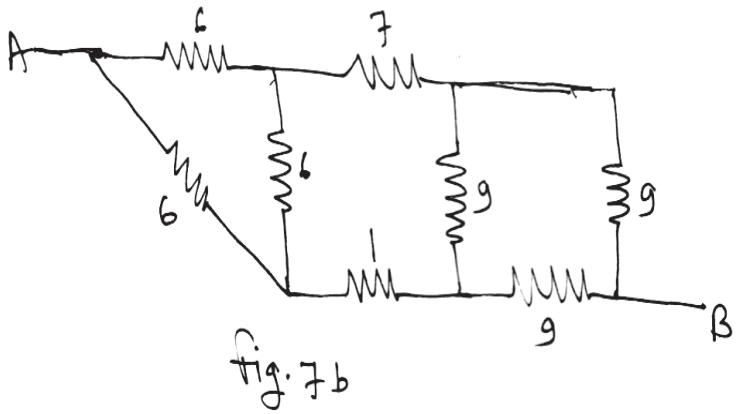

Fig. 7b

OR

Q8) a) For the circuit shown in fig. 8.a find the current flowing through PQ using Kirchhoff's laws. **[6]**

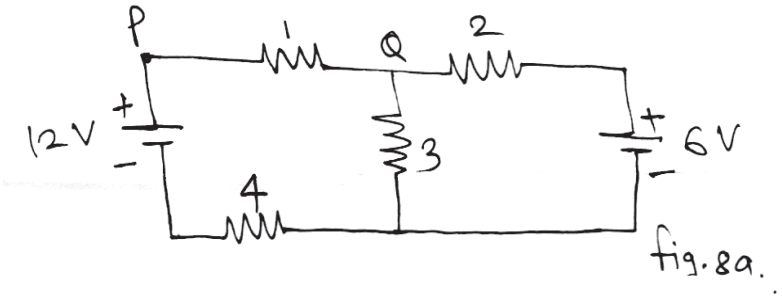

fig. 8a.

b) Write down the steps to find current through resistance R3 using Superposition theorem for the circuit shown in fig. 8.b. **[7]**

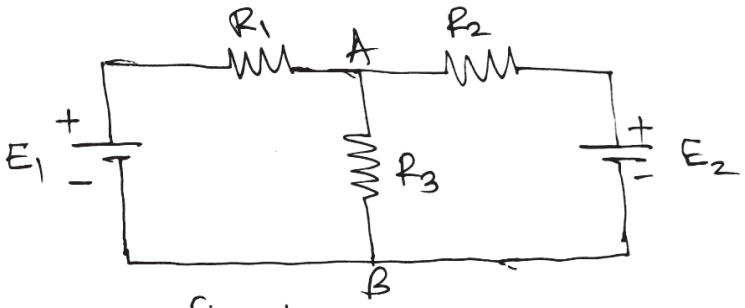

fig. 8b

Total No. of Questions : 8]

SEAT No. :

P-9372

[Total No. of Pages : 2

[6178]-5006

F.E. (Semester - I & II)

BASIC CIVIL & ENVIRONMENTAL ENGINEERING

(2015 Course) (101005)

Time : 2 Hours] ***[Max. Marks : 50***

Instructions to the candidates:

1) ***Answer Q.1 or Q.2, Q.3 or Q.4, Q.5 or Q.6, Q.7 or Q.8.***
2) ***Neat diagrams must be drawn whenever necessary.***
3) ***Figures to the right indicate full marks.***

Q1) a) How will you correlate the importance of Environmental Engineering and development activities? Explain. **[4]**

b) State the various construction materials, which you have seen during your visit to construction site. Also state the one use of each. **[4]**

c) Explain in brief the practical application of Transportation engineering. **[4]**

OR

Q2) a) What is Prestress concrete? State any two application of PSC. **[4]**

b) Define Irrigation Engineering. Highlight the importance of irrigation engineering in today's era. **[4]**

c) Comment the statement "Use of recycle construction material is the need of the time". **[4]**

Q3) a) The following consecutive readings were taken with a dumpy level and 4 m leveling staff. **[6]**

0.750, 1.435, 1.800, 0.400, 1.705, 1.525, 0.865, 1.300

The level was shifted after third and sixth reading. The first reading was taken on A.B.M. of R.L. 100.000 m. Calculate the reduced levels of remaining staff stations. Apply usual arithmetic check.

b) State the main objectives of environmental impact assessment. **[4]**

c) What are the adverse effects of over-exploitation of mineral resources on the environment. **[3]**

P.T.O.

OR

Q4) a) Explain the tabular form and procedure for computing R.L. of stations using collimation plane method. What do you mean by 'rise' and 'fall' of stations. **[5]**

b) Explain in detail the adverse environmental impacts of solid wastes. **[4]**

c) What is meant by sustainable development? State its importance in the present context. **[4]**

Q5) a) Explain the importance of circulation as a principal of planning. **[4]**

b) Briefly explain the concept of Green building. **[5]**

c) "Privacy is the important principal of planning". Comment on the statement. **[4]**

OR

Q6) a) On a plot of 25 m × 30 m, a building of G + 1 is proposed with a built up area of 400 sq.m on the ground and first floor. Permissible FSI is 0.9. All margins will be 2 m as per bye-laws. Find **[5]**

i) Plinth area of building

ii) State with reason weather the plan will be sanctioned or not, based on allowable built up area as well as ground coverage.

b) What do you mean by Elegance of building? What are the various ways of achieving it? **[4]**

c) What is set back distance? Why it is required? Also state the prescribed values of setback distance for residential building. **[4]**

Q7) a) Write a short note on Water Pollution. **[4]**

b) Explain in brief the various causes of Land Pollution. **[4]**

c) As a responsible member of the Civil Society, How will you contribute yourself to reduce the Air pollution? **[4]**

OR

Q8) a) Write a short note on Ozone depletion. **[4]**

b) Explain in brief the mechanism of production of wind energy. **[4]**

c) Explain in brief the physiological and psychological effects of noise pollution on human health. **[4]**

□□□

Total No. of Questions : 8]

SEAT No. : ____

P9373

[Total No. of Pages : 3

[6178]-5007
F.E.
ENGINEERING GRAPHICS - I
(2015 Pattern) (Semester - I/II) (Credit System) (102006)

Time : 2 Hours] ***[Max. Marks : 50***

Instructions to the candidates:

1) ***Solve Q.1 or Q.2, Q.3 or Q.4, Q.5 or Q.6, Q.7 or Q.8.***
2) ***Assume suitable data, if necessary.***
3) ***Retail all the construction lines.***

Q1) A line AB, 75 mm long is inclined at an angle of 35º to the V.P. Its end point 'A' is 20 mm above the H.P. and 15 mm in front of the V.P. Plan length of the line is 50 mm. Draw the projections of the line AB assuming it to be in first quadrant. Also locate its traces. **[12]**

OR

Q2) A regular pentagonal plate of 30 mm sides is resting on H.P. on one of its sides with its surface inclined at 45º to HP. Draw its projections when the side in HP makes an angle of 30º with V.P. **[12]**

Q3) A square pyramid, 45 mm base sides and axis 65 mm long, has a triangular face on the ground and the vertical plane containing the axis makes an angle of 45º with the V.P. Draw the projection of solid take apex nearer to V.P. **[13]**

OR

Q4) a) Draw the helix of one revolution to a cylinder of base diameter 50 mm and axis height 96 mm. **[7]**

b) Draw the development of lateral surface of a hexagonal prism of base side 30 mm and axis height is 70 mm. **[6]**

Q5) For the pictorial view shown in the figure 1, draw. **[13]**

a) Sectional Front View (Along section A-A)
b) Top View and
c) Right Hand Side View

Place all necessary dimensions. Use First Angle Projection Method.

P.T.O.

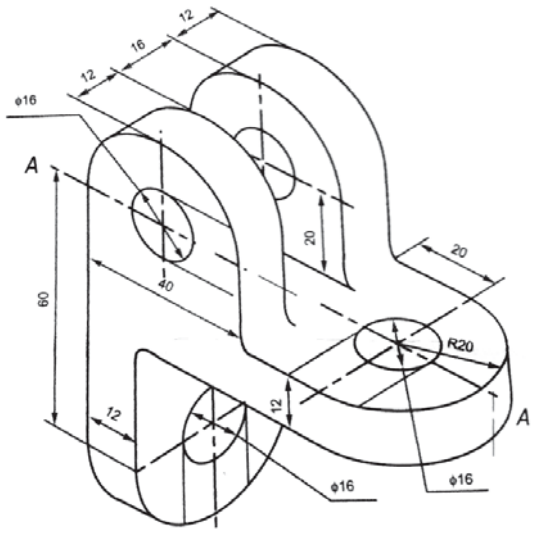

Fig.1

OR

Q6) For the pictorial view shown in the figure 2, draw **[13]**

a) Front View

b) Top View and

c) Sectional Left-Hand Side View (Along section X-X)

Place all necessary dimensions. Use First Angle Projection Method.

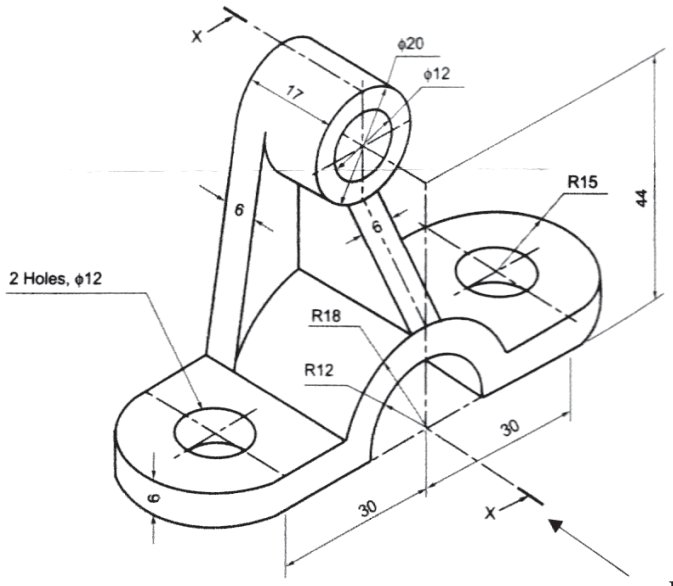

Fig. 2

Q7) Figure 3 shows Front view and Top view of an object. Draw the isometric view of the object. **[12]**

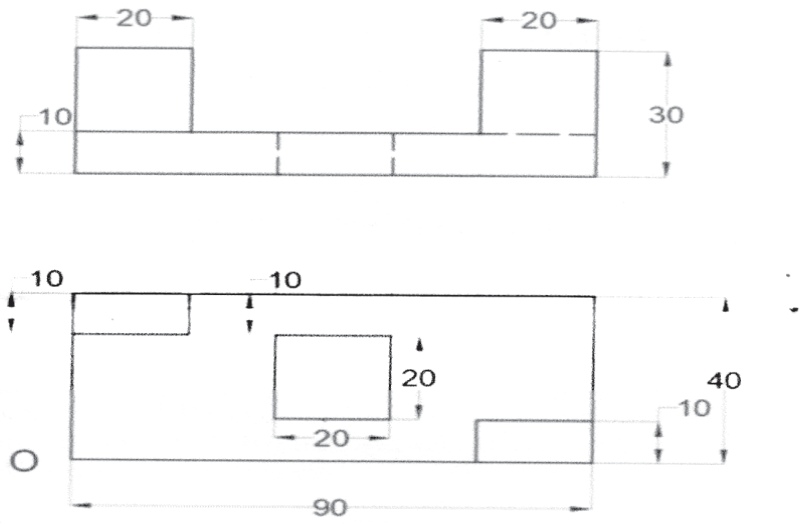

Figure 3

OR

Q8) Figure 4 shows Front view and Top view of an object. Draw the isometric view of the object. **[12]**

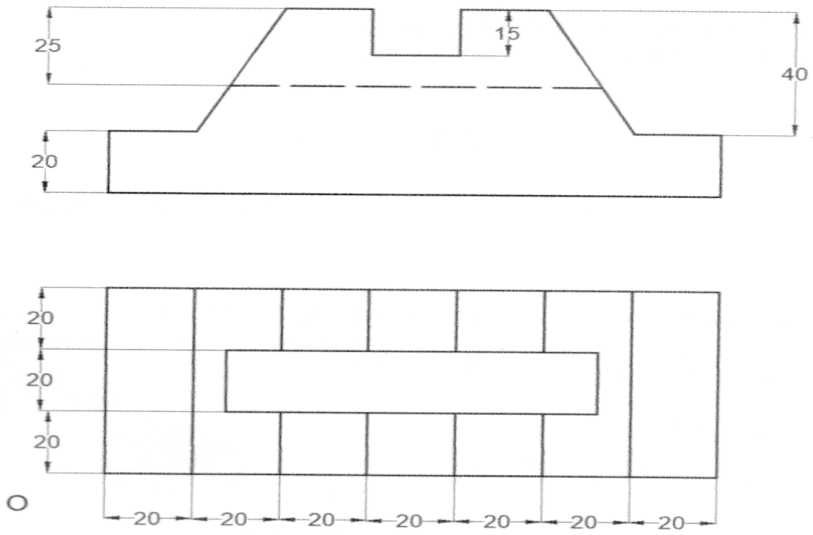

Fig. 4

Total No. of Questions : 8]

SEAT No. : ____

P9374

[Total No. of Pages : 3

[6178]-5008

F.E.

ENGINEERING MATHEMATICS-II

(2015 Pattern) (Credit System) (Semester-I/II) (107008)

Time : 2 Hours] ***[Max. Marks : 50***

Instructions to the candidates:

1) ***Attempt Q.1 or Q.2, Q.3 or Q.4, Q.5 or Q.6, Q.7 or Q.8.***
2) ***Neat diagram must be drawn wherever necessary.***
3) ***Figures to the right indicate full marks.***
4) ***Use of electronic pocket calculator is allowed.***
5) ***Assume suitable data, if necessary.***

Q1) a) Solve the following differential equations. **[8]**

i) $(y^2.e^{xy^2}+4x^3)dx+(2xye^{xy^2}-3y^2)dy=0$

ii) $\frac{dy}{dx}=\frac{x+y+1}{2x+2y+1}$

b) If the temperature of the body drops from 100ºC to 60ºC in one minute when the temperature of the surrounding is 20ºC, what will be the temperature of the body at the end of second minute? **[4]**

OR

Q2) a) Solve $(y^4-2x^3y)dx+(x^4-2xy^3)dy=0$ **[4]**

b) i) A resistance of 100 ohms, an inductance of 0.5 henry are connected in series with a battery of 20 volts. Find the current in a circuit as a function of t. **[4]**

ii) Find orthogonal trajectories of the family of curve $r^2 = a \sin 2\theta$. **[4]**

P.T.O.

Q3) a) Obtain the Fourier series to represent the function $f(x) = x$ in $-\pi < x < \pi$ and $f(x) = f(x + 2\pi)$ **[5]**

b) Evaluate $\int_0^\infty x^7 e^{-2x^2}\, dx$ **[3]**

c) Solve any one **[4]**

i) Trace the curve $xy^2 = a^2 (a - x)$.

ii) Trace the curve $r = a \sin 2\theta$.

OR

Q4) a) If $I_n = \int_0^{\pi/2} x^n \cos x\, dx$, then prove that $I_n = \left(\frac{\pi}{2}\right)^n - n(n-1)\, I_{n-2}$ **[4]**

b) If $f(x) = \int_0^x (x-t)^2 G(t)\, dt$ then show that $\frac{d^3 f}{dx^3} - 2G(x) = 0.$ **[4]**

c) Find the length of the arc of cycloid $x = a(\theta + \sin\theta)$, $y = a(1 - \cos\theta)$ between two consecutive cusps. **[4]**

Q5) a) Prove that the sphere $x^2+y^2+z^2+2x-4y-2z-3 = 0$ touches the plane $2x-2y-z+16 = 0$ and find the point of contact. **[5]**

b) Find the equation of the right circular cone whose vertex is (1,–1, 2) and axis is the line $\frac{x-1}{2} = \frac{y+1}{1} = \frac{z-2}{-2}$ and semi vertical angle 45°. **[4]**

c) Find the equation of right circular cylinder of radius 3 whose axis is the line $\frac{x-1}{2} = \frac{y-3}{2} = \frac{z-5}{-1}$ **[4]**

OR

Q6) a) Find the center and radius of the circle $x^2+y^2+z^2+4x-6y+2z-10 = 0$; $3x-y+3z-7 = 0$. **[5]**

b) Find the equation of cone with vertex (1,2–3) semi vertical angle. $\cos^{-1}\left(\frac{1}{\sqrt{3}}\right)$ and the line $\frac{x-1}{1}=\frac{y-2}{2}=\frac{z+1}{-1}$ as axis of the line. **[4]**

c) Find the equation of right circular cylinder of radius 2 and equation of axis is $\frac{x-1}{2}=\frac{y-2}{-3}=\frac{z-3}{6}$ **[4]**

Q7) Attempt any two of the following.

a) Evaluate $\int_0^1 \int_0^{\sqrt{1-x^2}} \frac{dxdy}{1+x^2+y^2}$ **[6]**

b) Evaluate $\iiint x^2 yz\, dxdydz$ over the region bounded by the planes $x = 0$, $y = 0$, $z = 0$ and $x + y + z = 1$. **[7]**

c) Find the centroid of the area bounded by the parabola $y^2 = 4ax$ between $x = 0$ and $x = a$. **[6]**

OR

Q8) Attempt any two of the following.

a) Find the area bounded by the parabola $y = x^2$ and the line $y = 2x + 3$. **[6]**

b) Find the volume of the paraboloid $x^2 + y^2 = 4z$ cut off by the plane $z = 4$. **[7]**

c) Find the moment of inertia (M.I.) about the x-axis of the area enclosed by the lines $x = 0$, $y = 0$ and $\frac{x}{a}+\frac{y}{b}=1$. **[6]**

❖ ❖ ❖

Total No. of Questions : 6]

SEAT No. :

P-9375

[Total No. of Pages : 4

[6178]-5009

F.E. (Common)

ENGINEERING MECHANICS

(2015 Pattern) (Semester - I/II) (101011)

Time : 2 Hours] *[Max. Marks : 50*

Instructions to the candidates:

1) ***Attempt Q.1 or Q.2, Q.3 or Q.4, Q.5 or Q.6.***
2) ***Figures to the right indicate full marks.***
3) ***Assume suitable data, if necessary.***
4) ***Use of electronic pocket calculator is allowed in the examination.***
5) ***Use of cell phone is prohibited in the examination hall.***

Q1) a) Determine the tension in cables *BA* and *BC* necessary to support the 60 kg cylinder 'D' as shown in Fig. 1A. **[4]**

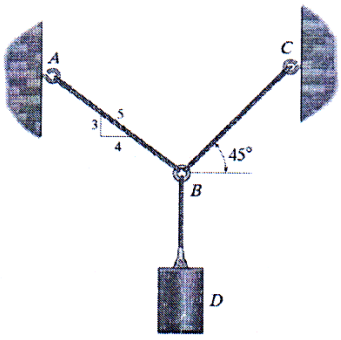

Fig. 1A

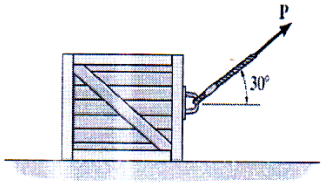

Fig. 1B

b) If the coefficient of kinetic friction between the 50-kg crate and the ground is $\mu_k = 0.3$, as shown in Fig. 1B. Determine the acceleration with which the crate moves. Also find its velocity when t = 3s. The crate starts from rest and P = 200 N. **[4]**

c) The car moves in a straight line such that for a short time its velocity is defined by, $V = (3t^2 + 2t)$ m/s, where t is in seconds. Determine its position and acceleration when t = 5 s. Note when t = 0, s = 0. **[4]**

d) A tennis ball dropped from a height 800 mm, if the coefficient of restitution 'e = 0.56', then determine the height of rebound. **[4]**

OR

P.T.O.

Q2) a) Determine the position of centroid of the shaded portion with respect to origin 'O' as shown in Fig. 2A. All dimensions are in mm. **[4]**

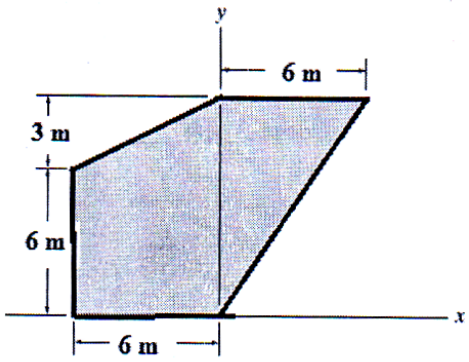

Fig. 2A

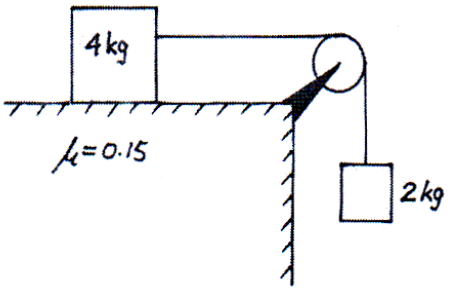

Fig. 2B

b) The system as shown in Fig. 2B, 4 kg block resting on the horizontal floor with coefficient of friction as 0.15, connected with 2 kg block by inextensible cable, which is passing over a frictionless pulley. Neglecting mass of the pulley, determine the acceleration of the 2 kg block with which it moves after releasing from rest. **[4]**

c) The conveyor belt is designed to transport packages horizontally. Each 10-kg package has a coefficient of kinetic friction $\mu_k = 0.15$. If the speed of the conveyor is 8 m/s and then due to power failure it suddenly stops, determine the time taken by the package to come to rest. Use Impulse-momentum equation. **[4]**

d) A spring is stretched by 50 mm by the application of a force 'F'. Find the work done, if the force required to stretch 1 mm of the spring is 10 N. **[4]**

Q3) a) The 'I' joist bean AB of span 6 m supported with hinge 'A' and Roller 'B', as shown in Fig. 3A. Determine the support reactions. **[6]**

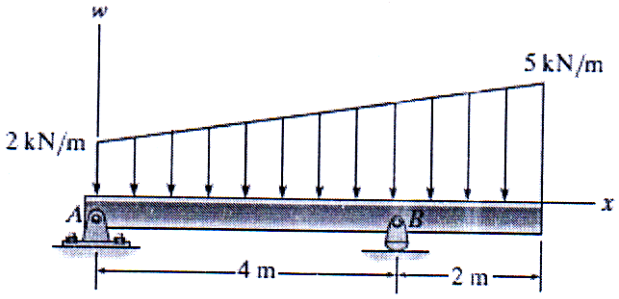

Fig. 3A

b) Determine the forces in cables AC and AB needed to hold the 20-kg ball D in equilibrium, as shown in Fig. 3B. Take F = 300 N and d = 1 m. **[5]**

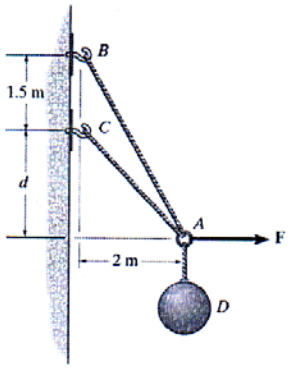

Fig. 3B

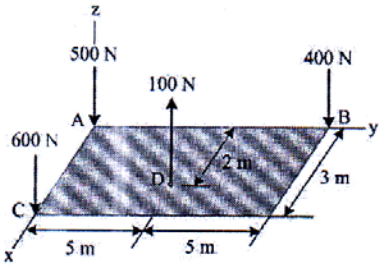

Fig. 3C

c) The rectangular 3m × 10m, steel plate subjected to four forces, as shown in Fig. 3C. Determine the resultant force in magnitude and direction w.r.to 'A'. **[6]**

OR

Q4) a) Determine the support reactions for the beam AB of 8m span, loaded and supported as shown in Fig. 4A. **[6]**

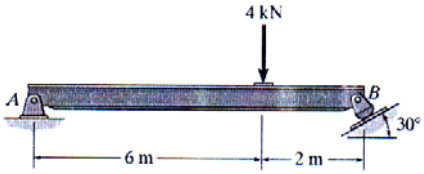

Fig. 4A

b) Three cables meeting at point A as shown in Fig. 4B. Find magnitude of the tension developed in each cable AB, AC and AD, supporting 50 N earthen pots. [OD = 1.5m,; A from y =1.5m; A from x = 2m]. **[6]**

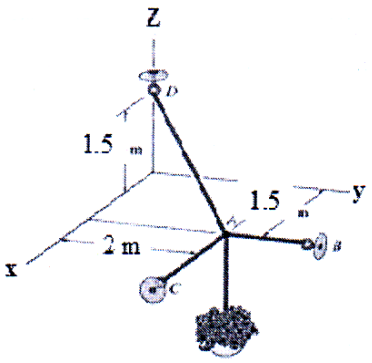

Fig. 4B

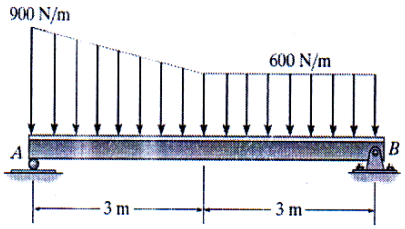

Fig. 4C

c) The I-joist supports UVL (900 N/m) for 3 m length and UDL (600 N/m) for 3 m length, as shown in Fig. 4C. Determine the support reactions at hinge B and roller A. Neglect the self-weight of the joist. **[5]**

Q5) a) A ladder, 5 meters, long rests on a horizontal ground and leans against a smooth vertical wall at an angle 70° with the horizontal. The weight of the ladder is 900 N and acts at its middle. Calculate the coefficient of friction between the ladder and the floor, just to have equilibrium. **[6]**

b) Determine the forces in all the members of the truss loaded and supported as shown in the Fig. 5B. Tabulate the result with magnitude and nature of force in the members. **[6]**

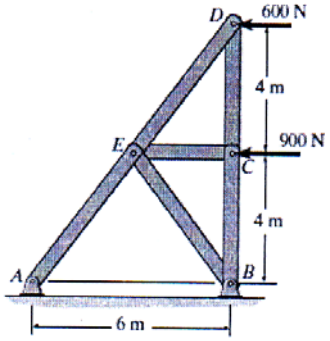

Fig. 5B

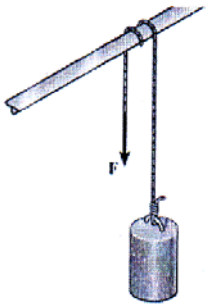

Fig. 5C

c) A cylinder having a mass of 250 kg is to be supported by the cord which wraps over the pipe as shown in Fig. 5C. Determine the smallest vertical force 'F' needed to support the load, if $\beta = 540°$. Take $\mu_s = 0.2$. **[5]**

OR

Q6) a) Determine the forces in the members AE, BE and BC of the truss loaded and supported as shown in the Fig.5B, using section method. Tabulate the result with magnitude and nature of force in the members. **[5]**

b) Cable ABCDE is loaded with F = 30 kN at 'D' with supports as shown in the Fig. 6B. Determine the tension in each segment of the cable. **[6]**

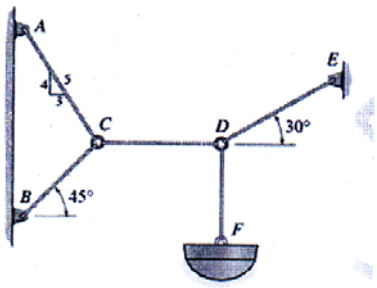

Fig. 6B

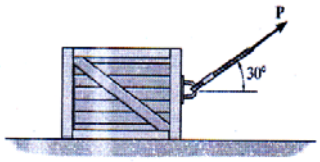

Fig. 6C

c) A 40 kg block resting on rough horizontal floor with coefficient of friction between floor and block as 0.30, applied with force 'P' inclined upward at an angle 30° with horizontal as shown in Fig. 6C. Determine the magnitude of the force required just to start the motion of the block. **[6]**

Total No. of Questions : 8]

SEAT No. : ____

P9376

[Total No. of Pages : 2

[6178]-5010
F.E.
BASIC MECHANICAL ENGINEERING (BME)
(2015 Pattern) (Credit System) (Semester - I & II) (102013)

Time : 2 Hours] ***[Max. Marks : 50***

Instructions to the candidates:

1) ***Attempt Q.1 or Q.2, Q.3 or Q.4, Q.5 or Q.6, Q.7 or Q.8.***
2) ***Neat diagrams must be drawn wherever necessary.***
3) ***Figures to the right indicate full marks.***
4) ***Assume suitable data, if necessary.***
5) ***Use of cell phone is prohibited in the examination hall.***
6) ***Use of electronic pocket calculator is allowed.***

Q1) a) Sketch and explain different types of keys. **[6]**

b) Explain the applications of following materials in engineering- **[6]**

i) Aluminum,

ii) Plastic, and

iii) Copper.

OR

Q2) a) Explain construction and working of single plate clutch with neat sketch. **[6]**

b) Explain the steps to be followed in design process with a neat flow chart. **[6]**

Q3) a) Explain with sketches the different stages involved in manufacturing of sand casting. **[6]**

b) Define grinding. Explain surface, cylindrical and centerless grinding operations with neat sketch. **[6]**

OR

Q4) a) Draw self explanatory sketches of any three: sheet metal cutting (shearing) and any three: sheet metal forming operations. **[6]**

b) Explain following lathe operations with neat sketches- **[6]**

i) Turning

ii) Taper turning

iii) Facing

P.T.O.

Q5) a) Differentiate between heat pump and refrigerator. Also prove that, **[6]**
(COP) heat pump = (COP) refrigerator = 1

b) An engine develops 80 kW of work output when the heat is supplied at the rate of 240 kW. Find the efficiency of the engine and heat rejected to atmosphere. Draw sketch of the system. **[4]**

c) Explain Kelvin-Planck statement of second law of thermodynamics. **[3]**

OR

Q6) a) Draw sketch and explain Joule's experiment with its conclusion. **[6]**

b) A fish freezing plant is to be maintained at -10°C. If the power required to drive the plant is 30 kW and COP of the refrigeration system is 3. Find

i) Heat absorbed from the freezing plant and

ii) Heat rejected to the surrounding. Draw sketch of the system. **[4]**

c) What are the limitations of first law of Thermodynamics? **[3]**

Q7) a) Explain with sketch the construction and working of 4- stroke C.I. engine. **[7]**

b) Explain the construction and working of reciprocating water pump. **[6]**

OR

Q8) a) Draw labeled sketch of vapour compression refrigeration system. Define COP. **[7]**

b) Explain working of Reciprocating compressor with neat sketch. **[6]**